This is a digital copy of a book that was preserved for generations on library shelves before it was carefully scanned by Google as part of a project to make the world's books discoverable online.

It has survived long enough for the copyright to expire and the book to enter the public domain. A public domain book is one that was never subject to copyright or whose legal copyright term has expired. Whether a book is in the public domain may vary country to country. Public domain books are our gateways to the past, representing a wealth of history, culture and knowledge that's often difficult to discover.

Marks, notations and other marginalia present in the original volume will appear in this file - a reminder of this book's long journey from the publisher to a library and finally to you.

Usage guidelines

Google is proud to partner with libraries to digitize public domain materials and make them widely accessible. Public domain books belong to the public and we are merely their custodians. Nevertheless, this work is expensive, so in order to keep providing this resource, we have taken steps to prevent abuse by commercial parties, including placing technical restrictions on automated querying.

We also ask that you:

+ *Make non-commercial use of the files* We designed Google Book Search for use by individuals, and we request that you use these files for personal, non-commercial purposes.
+ *Refrain from automated querying* Do not send automated queries of any sort to Google's system: If you are conducting research on machine translation, optical character recognition or other areas where access to a large amount of text is helpful, please contact us. We encourage the use of public domain materials for these purposes and may be able to help.
+ *Maintain attribution* The Google "watermark" you see on each file is essential for informing people about this project and helping them find additional materials through Google Book Search. Please do not remove it.
+ *Keep it legal* Whatever your use, remember that you are responsible for ensuring that what you are doing is legal. Do not assume that just because we believe a book is in the public domain for users in the United States, that the work is also in the public domain for users in other countries. Whether a book is still in copyright varies from country to country, and we can't offer guidance on whether any specific use of any specific book is allowed. Please do not assume that a book's appearance in Google Book Search means it can be used in any manner anywhere in the world. Copyright infringement liability can be quite severe.

About Google Book Search

Google's mission is to organize the world's information and to make it universally accessible and useful. Google Book Search helps readers discover the world's books while helping authors and publishers reach new audiences. You can search through the full text of this book on the web at `http://books.google.com/`

REPORTS OF COMMITTEES

OF THE

SENATE OF THE UNITED STATES

FOR THE

THIRD SESSION OF THE FIFTY-THIRD CONGRESS.

1894-95.

IN FOUR VOLUMES.

Volume 1.—Nos. 711 to 831, except Nos. 760, 769, and 808.
Volume 2.—Nos. 832 to 1049, except Nos. 865, 875, 932, 952, 986, 1021, 1022, 1023, 1024, 1033, 1034, and 1035.
Volume 3.—No. 986, parts 1 and 2.
Volume 4.—No. 760, parts 1 and 2.

NOTE.—Nos. 769, 808, 865, 875, 932, 952, 1021, 1022, 1023, 1024, 1033, 1034, and 1035 are bound with volume 2, first session Fifty-third Congress.

WASHINGTON:
GOVERNMENT PRINTING OFFICE.
1895.

LELAND STANFORD JUNIOR
LIBRARY
UNIVERSITY.

A. 21724.

INDEX

TO THE

REPORTS OF COMMITTEES

OF THE

SENATE OF THE UNITED STATES

FOR THE

THIRD SESSION OF THE FIFTY-THIRD CONGRESS.

Subject.	No.	Vol.
A.		
Abandoned military reservations, and for other purposes. On bill (S. 2433) to amend and extend the provisions of an act to provide for the opening of certain	735	1
Abercrombie, Abner. On bill (H. R. 7249) granting a pension to	1040	2
Adger, Robert. On bill (S. 278) to empower him and others to bring suit in the Court of Claims for rent alleged to be due them	823	1
Advertisements of the list of lands in the Territory of Oklahoma, etc. On bill (S. 2273) to provide for the payment of certain claims for compensation for publishing	795	1
Aerial navigation. On bill (S. 1344) to secure	992	2
Agricultural depression; causes and remedies	787	1
Alabama and Mississippi not needed for naval purposes. On bill H. R. 8614) to authorize the Secretary of the Navy to certify to the Secretary of the Interior, for restoration to the public domain, lands in the States of	1007	2
Albin, William. On bill (H. R. 5005) to remove the charge of desertion from	984	2
Alcohol in the arts, Great Britain, Germany, Switzerland, the Netherlands, Belgium, France, Italy, Russia, Sweden, Norway, Portugal, Austria-Hungary	760	4
Allabach, Nancy G. On bill (S. 1639) granting a pension to	837	2
Allegheny and Pittsburg, Pa. On joint resolution (H. Res. 97) donating two obsolete cannon to the cities of	736	1
Allen, Martha. On bill (S. 2403) granting a pension to	775	1
Ames and Detrick. On bill (S. 490) for the relief of	822	1
Anderson, Nancy Gabrilla. On bill (H. R. 6531) granting a pension to	782	1
Antisell, Thomas. On bill (S. 909) for the relief of	939	2
Appropriations. On bill (H. R. 8125) making appropriations for the Military Academy for the fiscal year ending June 30, 1896	729	1
Appropriations. On bill (H. R. 8226) making appropriations for the support of the Army for the fiscal year ending June 30, 1896, and for other purposes	750	1
Appropriations. On bill (H. R. 8093) making appropriations for fortifications and other works of defense, etc	759	1
Appropriations. On bill (H. R. 8234) making appropriations for the diplomatic and consular service of the United States for the fiscal year ending June 30, 1896, etc	843	2
Appropriations. On bill (H. R. 8388) making appropriations to provide for the expenses of the government of the District of Columbia for the fiscal year ending June 30, 1896, and for other purposes	844	2

Subject.	No.	Vol.
Appropriations. On bill (H. R. 8272) making appropriations for the service of the Post-Office Department for the fiscal year ending June 30, 1896	874	2
Appropriations. On bill (H. R. 8479) making appropriations for current and contingent expenses and fulfilling treaty stipulations with Indian tribes, for the fiscal year ending June 30, 1896	900	2
Appropriations. On bill (H. R. 8727) making appropriations for the Department of Agriculture for the fiscal year ending June 30, 1896	924	2
Appropriations. On bill (H. R. 8518) making appropriations for sundry civil expenses of the Government for the fiscal year ending June 30, 1896, and for other purposes	950	2
Appropriations. On bill (H. R. 8767) making appropriations for the legislative, executive, and judicial expenses of the Government for the fiscal year ending June 30, 1896, and for other purposes	965	2
Appropriations. On bill (H. R. 8665) making appropriations for the naval service for the fiscal year ending June 30, 1896, and for other purposes	1020	2
Archer. On bill (S. 2358) to provide American registers for the vessels *Linda* and	724	1
Armstrong, William. On bill (H. R. 6985) granting a pension to	898	2
Army officers in certain cases. On bill (S. 2297) to provide for the reinstatement, readjustment, settlement and payment of dues to	754	1
Artesian wells in the arid districts of South Dakota, Nebraska, and Kansas. On bill (S. 2541) to provide for the sinking of	944	2
Articles for the Government of the Navy, etc. On bill (H. R. 6323) to amend the	853	2
Articles for the Government of the Navy. On bill (H. R. 5218) to amend the	854	2
B.		
Bailey, J. J. On bill (S. 1341) for the relief of	827	1
Baltimore, Md. On joint resolution (S. Res. 123) authorizing the mayor and city council to occupy for a period of five years and erect a building thereon a certain lot in the city of	825	1
Banks, Mary Palmer. On bill (S. 2359) granting a pension to	715	1
Baptist church in Corinth, Miss. On bill (S. 2694) for the relief of the	966	1
Baronett, C. J. On bill (S. 957) for the relief of	925	2
Betts, Nichols & Co. On bill (S. 1231) for the relief of	881	2
Bigelow, John R. On bill (S. 1360) for the relief of the estate of	885	2
Billings, J. M. On bill (H. R. 995) for the relief of	999	2
Bishop, Joshua. On bill (S. 1908) for the benefit of	849	1
Blair, Oliver M. On bill (S. 2756) for the relief of	991	2
Board of Visitors to the United States Military Academy at West Point for the year 1894, etc. On Senate resolution to print, in paper covers, 2,500 extra copies of the Annual Report of the	797	1
Bond, William E. On bill (H. R. 6852) for the relief of	917	2
Bonds of officers of the United States. On bill (H. R. 8704) to regulate	1022	2
Box, Marcus D. On bill (H. R. 4850) granting a pension to	799	1
Boyd, Augustus. On bill (S. 1287) for the relief of	896	2
Breedlove, Napoleon B. On bill (S. 2746) granting a pension to	1005	2
Briggs, Julius L. On bill (H. R. 5912) for the discharge of, as sergeant	779	1
Bristol Township, Bucks County, Pa. On bill (H. R. 8153) authorizing and directing the sale of certain property belonging to the United States in	894	2
Brooks, Joseph R. On bill (H. R. 5565) granting a pension to	958	2
Broome, John L. On bill (S. 1193) for the relief of	743	1
Brott, George F. On bill (S. 1861) for the relief of	909	2
Brower, Elizabeth. On bill (H. R. 5642) granting a pension to	915	2
Brown, Hosea. On bill (H. R. 8127) granting a pension to	987	2
Brown, William. On bill (S. 2732) granting a pension to	934	2
Buckley, William W. On bill (H. R. 8237) for the relief of	908	2
Burlington, Vt., to be used in decorating Battery Park. On joint resolution (S. R. 138) authorizing the Secretary of the Navy to deliver unserviceable or condemned cannon to the mayor of	973	2

Subject.	No.	Vol.
Burrell, Samuel. On bill (H. R. 3128) for the relief of	998	2
Buskirk, Florence W. On bill (S. 2671) granting a pension to	873	2
Butler, Edward J. On bill (H. R. 2726) to remove the charge of desertion	737	1
Button, Mary, Mrs. On bill (H. R. 6461) granting a pension to	1002	2
C.		
Caine, Catherine. On bill (H. R. 952) for the relief of	997	2
California. On bill (S. 2082) for the relief of bona fide purchasers of land in section 36, township 1 north, range 9 west (San Bernardino meridian), in the State of	792	1
Callison, James. On bill (S. 244) granting a pension to	812	1
Canal street, etc., in Washington, D. C. On bill (S. 2189) to regulate	791	1
Capital Railway Company. On bill (H. R. 8714) to incorporate the	976	2
Carney, Ellen. On bill (H. R. 1716) granting pension to	962	2
Carpenter, Moses W. On bill (H. R. 2561) for the relief of	777	1
Carroll, Helen Morell. On bill (S. 2414) granting an increase of pension to	763	1
Carter, Martha Custis. On bill (S. 328) granting a pension to	731	1
Cash entries of certain offered lands, etc. On bill (H. R. 4244) to confirm	948	2
Cattle (live), hogs, and the carcasses and products thereof. On bill (H. R. 7910) to provide for the inspection of	751	1
Checking paid money orders against the reports of issue. Joint Commission of Congress, etc., submit report and recommendations of the experts of the Commission in regard to	1035	2
Chicago strike of June and July, 1894. On Senate concurrent resolution to print 20,000 extra copies of the report on the	912	2
Church, Benjamin F. On bill (S. 1293) to relieve from a charge of desertion	930	2
Citizens' Bank of Louisiana. On bill (S. 2410) for the relief of the	824	1
Clark, Amos. On bill (S. 1469) to remove charge of desertion	817	1
Clark, Mary L. On bill (H. R. 6974) granting a pension to	839	2
Clayton, Harriet, Mrs. On bill (H. R. 7422) granting pension to	789	1
Coal and wood for the Departments, etc. On bill (H. R. 8716) to amend section 3711 of the Revised Statutes concerning purchase of	865	2
Cobb, Rosanna. On bill (H. R. 5994) granting a pension to	806	1
Coinage laws of the United States, etc. On Senate resolution to print the, copies of the fourth edition of the	745	1
Coleman, Anna M. On bill (S. 593) to permit, to prosecute a claim, etc.	862	2
Committee on Banking and Currency of the House of Representatives on the bill (H. R. 8149), etc. On House concurrent resolution to print in one volume 9,500 extra copies of the report of the	742	1
Committee on Interstate Commerce 100 copies of all reports of and hearings had before said committee from the year 1889 (inclusive) to date. On Senate resolution to print for the use of the	859	2
Constitution. On joint resolution (H. Res. 20) proposing an amendment thereto, providing that Senators shall be elected by the people of the several States	916	2
Continental Fire Insurance Company and others. On joint resolution (S. R. 9) for the relief of the	891	2
Conwell, Louisa C. On bill (H. R. 4935) granting a pension to	954	2
Corbett, Annie J. On bill (H. R. 8245) granting a pension to	1044	2
Corigan, Thomas. On bill (H. R. 5260) granting a pension to	910	2
Corigan, Thomas. On bill (H. R. 5260) granting a pension to	969	2
Corts, George P. On bill (S. 2612) for correction of muster of	1016	2
Cotton, etc. On resolution to print 5,500 copies of the report of the Committee on Agriculture and Forestry on	1013	2
Cotton growers in the United States. Report of committee on condition of. (Parts 1 and 2)	986	2
Courts of the United States, approved August 1, 1888. On bill (H. R. 6979) to regulate the liens of judgments and decrees of the	1011	2
Crimes of murder in the first and second degrees, etc. On bill (H. R. 5836) to define the	846	2

Subject.	No.	Vol.
Crawford, Emmet, deceased. On bill (S. 1074) for the relief of the estate of	756	1
Crawford, Wear. On bill (H. R. 6928) to remove the charge of desertion from the military record of	1025	2
Crittenden, Katherine Todd. On bill (S. 1135) granting a pension to	716	1
Curran, James. On bill (S. 2503) for the relief of	936	2
Customs, etc. Report and recommendation of the experts with reference to the method of collecting the	1033	2
D.		
Davis, Maria. On bill (H. R. 6186) granting a pension to	790	1
"Dawes Commission," etc. On Senate resolution to print as a Senate document the usual number of the statements presented by the Choctaw and Chickasaw freedmen to the commission known as the	796	1
Deal, Charles. On bill (H. R. 7603) for the relief of	1008	2
Decisions of the Department of the Interior relating to public lands, etc. On joint resolution (H. Res. 92) to print and bind in full sheep 1,000 copies each of volumes 13 to 19, inclusive, of the	856	2
Denham, Merrill. On bill (H. R. 1075) for the relief of	968	2
Department of the Interior, relating to public lands, etc. On joint resolution (H. Res. 92) to print and bind in full sheep 1,000 copies each of volumes 13 to 19, inclusive, of decisions of the	856	2
De Soto and *Bienville*. On amendment to bill (H. R. 8665) making appropriations for the naval service, etc., in relation to the owners of the steamships	1010	2
Devine, Bridget. On bill (H. R. 1229) granting a pension to	922	2
Dillon, Catherine. On bill (S. 1238) granting a pension to	882	2
District of Columbia. On bill (S. 2361) to amend an act entitled "An act to incorporate the Maryland and Washington Railway Company"	761	1
District of Columbia. On bill (S. 937) for the relief of the heirs of Nathaniel Magruder	786	1
District of Columbia. On bill (S. 2165) to amend an act entitled "An act to provide for the settlement of all outstanding claims against the District of Columbia, etc., approved June 16, 1880"	788	1
District of Columbia. On bill (S. 2189) to regulate Canal street, etc., in the city of Washington	791	1
District of Columbia. On bill (S. 2621) for the removal of snow, ice, dirt, sand, and gravel from sidewalks in the cities of Washington and Georgetown, and for other purposes	793	1
District of Columbia. On joint resolution (S. R. 108) to empower the Commissioners of the District of Columbia to make and enforce regulations to secure the removal of snow, ice, and dirt from the sidewalks in the District of Columbia, etc	794	1
District of Columbia. On amendment to the bill (H. R. 8388) making appropriations to provide for the expenses of the government of the District of Columbia concerning the salaries of van drivers, etc	819	1
District of Columbia. On bill (S. 329) for the relief of the estate of William B. Todd, deceased	828	1
District of Columbia. On bill (S. 2438) making appropriation to provide for the expense of completing the Eckington Valley trunk sewer from U street, Eckington, to Lansing street, etc	829	1
District of Columbia. On bill (S. 2625) for the relief of the heirs and devisees of Jonathan Kirkwood, deceased	863	2
District of Columbia. On bill (S. 2339) to incorporate the East Washington Belt Line Railroad Company	901	2
District of Columbia. On bill (S. 2521) to amend the charter of the Metropolitan Railroad Company of the	902	2
District of Columbia. On bill (S. 2545) to amend the charters of certain street railroad companies in the	906	2
District of Columbia. On bill (H. R. 8714) to incorporate the Capital Railway Company	976	2
District of Columbia. On bill (H. R. 8698) to authorize the Washington and Marlboro Electric Railway Company of Maryland to extend its road into and within the	977	2

Subject.	No.	Vol.
District of Columbia. On bill (H. R. 6816) to amend the charter of the District of Columbia Suburban Railway Company	1028	2
District of Columbia. On bill (H. R. 4279) fixing the maximum price to be charged for gas sold by the Washington Gaslight Company at the price of $1 per thousand cubic feet	1038	2
District of Columbia Suburban Railway Company. On bill (H. R. 6816) to amend the charter of the	1028	2
Durley, Williamson. On bill (H. R. 8888) granting a pension to	1041	2
E.		
East Washington Belt Line Railroad Company. On bill (S. 2339) to incorporate the	901	2
Eckert, Jacob. On bill (H. R. 6244) to remove the charge of desertion from the military record of	897	2
Eckington Valley trunk sewer, etc. On bill (S. 2438) making appropriations to provide for completing the	829	1
Elliott, Zimri. On bill (H. R. 5659) for the relief of	728	1
Empress. On bill (S. 2337) to provide an American register for the steamship	720	1
Encouragement of education in the State of Mississippi. On the bill (S. 2699) for the	892	2
English, Elizabeth Moore. On bill (H. R. 6585) granting a pension to	876	2
Engrossing and recording of patents for public lands, etc. On bill (H. R. 8490) to regulate the	808	2
Executive Document No. 119, Fifty-third Congress, second session. On Senate concurrent resolution to print and bind 3,500 extra copies of Senate	734	1
Ezeta, General. On message of the President transmitting, in response to resolution of the Senate of December 19, 1894, the records of the extradition proceedings in the case of	913	2
F.		
Faringhy, Louis O. On bill (S. 893) for the relief of	1019	2
Finnerty, Mary. On bill (H. R. 5843) granting a pension to	798	1
Flags of Maritime Nations. On Senate concurrent resolution to print 5,000 copies of the	860	2
Ford's Theater disaster. On amendment to bill (H. R. 8518) relating to the investigation of the	933	2
Forfeit certain lands heretofore granted for the purpose of aiding in the construction of railroads, and for other purposes." (Views of minority.) On bill (H. R. 121) to amend "An act to	741	1
Fort Hays Military Reservation in said State for the purpose of establishing western branches of the Kansas Agricultural College and the Kansas State Normal School, etc. On bill (S. 2799) granting to the State of Kansas the	1012	2
Fort Maginnis, Fergus County, Mont., to the State of Montana for a soldiers' home. On bill (S. 2714) granting certain lands in the abandoned military reservation at	982	2
Fort Wayne Military Reservation. On amendment to bill (H. R. 8518) making appropriations for sundry civil expenses of the Government for the fiscal year ending June 30, 1896, and for other purposes, in relation to	866	2
French spoliation claims, etc. On amendment to bill (H. R. 8518) making appropriations for sundry civil expenses of the Government for the fiscal year ending June 30, 1896, and for other purposes, in relation to the	946	2
Frontier Guards. On bill (S. 2372) to authorize and direct the Secretary of War to place on file in the War Department the names of the officers and members of the	871	2
G.		
Gamble, Robert. On bill (S. 1684) granting a pension to	926	2
Game, wild fowl, etc. On amendment to bill (H. R. 8518) making appropriations for the sundry civil expenses of the Government for the fiscal year ending June 30, 1896, in relation to destruction of the eggs of	923	2

Subject.	No.	Vol.
Geer, Martha A. On bill (H. R. 3560) granting a pension to	773	1
Goldwater, Samuel. On bill (S. 2371) granting a pension to	877	2
Grace, James. On bill (S. 1530) for the relief of	904	2
Granger, Elizabeth A. On bill (S. 2148) granting a pension to	888	2
Greene, Carrie H. On bill (H. R. 8690) granting a pension to	1036	2
Greiner, G. O. On bill (H. R. 5194) granting a pension to	804	1
Griffin, John and Sarah. On bill (H. R. 561) for the relief of	989	2
Gurney, Marian C. On bill (S. 2539) granting a pension to	838	2
Guthrie, Oklahoma City, and Kingfisher in Oklahoma Territory, etc. On bill (H. R. 7020) to readjust the salaries and allowances of the postmasters at	880	2
H.		
Hall, Goff A. On bill (S. 584) for the relief of	957	2
Hall, Mary A. On bill (S. 2491) granting a pension to	893	2
Hall, Warren. On bill (S. 1894) for the relief of	821	1
Hamilton, Mary E. On bill (H. R. 6417) granting a pension to	918	2
Harbaugh, George W. On bill (S. 1864) for the relief of	919	2
Haxthausen, Joseph. On bill (H. R. 526) for the relief of	990	2
Historical Museum, Des Moines, Iowa. On bill (S. 2589) granting cannon to the	889	2
Holly, Charles F. On bill (S. 2199) granting a pension to	764	1
Holman, W. T. On bill (S. 2120) for the relief of	833	2
Homestead entry on any of the public lands. On amendment to bill (H. R. 8518) making appropriations for sundry civil expenses of the Government, for the fiscal year ending June 30, 1896, and for other purposes, in relation to record	949	2
The Income-tax law, etc. On Senate resolution to print, for the use of the Senate, as many copies as can be printed for $500 of the pamphlet issued by the Treasury Department containing	746	1
I.		
Indians. On bill (S. 1251) to accept, ratify, and confirm certain agreements heretofore concluded with certain	940	2
Institute and College for Girls. On bill (S. 2463) to grant a township of land to the State of Mississippi for the use of the	855	2
J.		
Jackson, Howell E., associate Justice of the Supreme Court of the United States. On bill (S. 2684) to permit, to retire	872	2
Jacob, Helen M. On bill (S. 1240) granting a pension to	718	1
Jardine, Catherine R. On bill (S. 2460) granting a pension to	887	2
Johnson, Gilman L. On bill (H. R. 840) to correct the muster of	975	2
Jones, C. E. On bill (S. 2351) granting a pension to	765	1
Jones, James. On bill (H. R. 8811) granting a pension to	963	2
K.		
Kale, Wilson. On bill (H. R. 3147) granting an honorable discharge to	1017	2
Keller, Silas P. On the bill (S. 2364) for the relief of	752	1
Kelly, Mary Clare. On bill (S. 1027) granting a pension to	920	2
Kellogg, Augustus G. On bill (S. 1905) for the relief of	852	2
Kepford, Susannah. On bill (H. R. 6951) granting a pension to	996	2
Kirshner, Philip. On bill (S. 2341) granting a pension to	832	2
Kiracofe, Robert. On bill (S. 2207) granting an increase of pension to	836	2
Kirkwood, Jonathan, deceased. On bill (S. 2625) for the relief of the heirs and devisees of	863	2
Knight, Richard R. On bill (H. R. 5377) granting a pension to	781	1
Knight, Richard R. On bill (H. R. 5377) granting a pension to	911	2
Knoxville Whig for advertising, etc. On bill (S. 1115) to authorize the investigation by Attorney-General of certain claims alleged to be due the late proprietors of the	785	1

Subject.	No.	Vol.
L.		
Labor, agriculture, and capital. On bill (S. 2750) authorizing the appointment of a non-partisan commission to collate information, etc., to meet the problems presented by	928	2
Land cases. On bill (H. R. 8591) to repeal section 2 of the act of May 12, 1880, relating to contested	769	2
Laughlin, Alexander M. On bill (H. R. 8884) granting a pension to	995	2
Leach, John B. On bill (H. R. 2118) granting a pension to	953	2
Leach, William. On bill (S. 1322) for the relief of	1001	2
Letters written in various departments of the Government. Report and recommendations of the experts of the Joint Commission of Congress, etc., with reference to preserving copies of	1034	2
Lewis, Matthew T. On bill (H. R. 6923) for the relief of	945	2
Levans, Mary. On bill (H. R. 5925) granting a pension to	733	1
Linda and *Archer*. On bill (S. 2358) to provide American registers for the vessels	724	1
Lowe, William W. On bill (S. 472) for the relief of	767	1
Lynn, Mary Jane. On bill (H. R. 6565) granting a pension to	1030	2
M.		
MacCord, Victor H. On Senate resolution of July 24, 1894, relating to all papers, etc., on file in State Department, in connection with his arrest and imprisonment at Arequipa, Peru	927	2
McCann, Michael. On bill (S. 896) for the relief of the legal representatives of	1018	2
McClernand, Maj. Gen. John A. On bill (S. 2343) granting a pension to	717	1
McConnell, H. W. On bill (H. R. 5368) for the relief of	801	1
McCook, Anson G., late Secretary of United States Senate. On letter of, transmitting catalogue of books in Senate library, etc	858	2
McDaniel, Orin R. On bill (S. 707) for the relief of	723	1
McGee, James P. On bill (H. R. 1819) to correct the military record of	810	2
McGuirk, Matthew. On bill (S. 1380) for the relief of	1045	2
Magruder, Nathaniel. On bill (S. 937) for the relief of the heirs of	786	1
Mangold, Saloma. On bill (H. R. 8264) granting a pension to	1003	2
Markham, Elizabeth L. On bill (H. R. 7671) granting a pension to	1032	2
Maryland and Washington Railway Company." On bill (S. 2361) to amend an act entitled "An act to incorporate the	761	1
Matchett, William B. On bill (S. 2696) granting a pension to	907	2
Mayo, Harriet L. On bill (S. 2320) granting a pension to	711	1
Medal of honor, etc. On joint resolution (H. Res. 199) relative to the	928	2
Meigs, John B. On bill (S. 1816) granting a pension to	713	1
Menough, H. F. On bill (S. 2377) for the relief of	921	2
Methodist church in the town of Brandon, Miss. On bill (S. 2695) for the relief of the	967	2
Metropolitan Railroad Company of the District of Columbia. On the bill (S. 2521) to amend the charter of the	902	2
Mexico. On bill (H. R. 8122) to further amend section 9 of the act for the relief of certain volunteer and regular soldiers of the late war with Mexico, passed March 2, 1889	941	2
Michigan. On joint resolution (S. R. 113) returning to the State of, certain regimental flags	867	2
Miscellaneous Document 278, second session, Fifty-third Congress. On Senate resolution to print 500 additional copies of Senate	1046	2
Mississippi. On bill (S. 2699) for the encouragement of education in the State of	892	2
Mississippi. On bill (S. 2463) to grant a township of land to the State of Mississippi for the use of the Institute and College for Girls	855	2
Missouri militia who served during the late war. On joint resolution (S. R. 125) to restore the status of the	807	1
Monasco, Willis. On bill (H. R. 5589) granting a pension to	776	1
Montana and Idaho. On bill (H. R. 3476) to provide for the examination and classification of certain mineral lands in the States of	726	1
Mount Vernon Military Reservation to the State of Alabama for public uses, etc. On bill (H. R. 8620) granting the	971	2

Subject.	No.	Vol.
Moreland, Basil. On bill (H. R. 4704) for the relief of	1042	2
Morris, Adelaide. On bill (S. 2519) granting a pension to	978	2
Moss, Sidney W. On bill (S. 119) for the relief of	784	1
Motz, Simeon, Nathaniel Robbin, and William J. Sloan. On bill (S. 1308) for the relief of	725	1
Movable Dam No. 6, in the Ohio River, near Beaver River. On amendment to the bill (H. R. 8518) making provision for an additional sum of $150,000 toward the construction of	800	1
Munson, Albert. On bill (H. R. 6646) granting a pension to	960	2
Murphy, Robert C. On bill (S. 377) for the relief of	988	2
N.		
National Academy of Sciences. On Senate resolution to print 2,000 copies of the report of the	712	1
National Home for Disabled Volunteer Soldiers, etc. On amendments to bill (H. R. 8518), increasing by some $3,000 the items of appropriation for salaries of officers and employees of the Board of Managers of the	883	2
National Lithographic Company, of Washington, D. C. On Senate resolution directing Committee on Printing to examine into all the facts and circumstances connected with the contract of the, for the publication of the Patent Office Gazette, etc	1047	2
National military park at the battlefield of Shiloh. On bill (H. R. 6499) to establish a	722	1
Naval Academy. On bill (H. R. 8552) to authorize the appointment of cadets to the	847	2
Naval Academy the power to convene general courts-martial. On bill (S. 2504) to confer upon the Superintendent of the United States	749	1
Naval reservation in the counties of Lafayette, Suwanee, and Alachua to homestead settlement, etc. On bill (S. 2378) for the opening of the	771	1
Navigation of harbors, rivers, and inland waters of the United States, etc. On bill (H. R. 8563) to adopt special rules for the	899	2
Navy. On bill (H. R. 5218) to amend the Articles for the Government of the	854	2
Navy and Marine Corps to duty at colleges, etc. On bill (S. 2596) authorizing the Secretary of the Navy to detail officers on the retired list of the	809	1
Navy relative to punishment on conviction by court-martial. On bill (H. R. 6323) to amend the Articles for the Government of the	853	2
Navy, Secretary of. On joint resolution (S. R. 138) authorizing him to deliver unserviceable or condemned cannon to the mayor of Burlington, Vt., to be used in decorating Battery Park	973	2
Navy, Secretary of. On bill (H. R. 8614) to authorize him to certify to Secretary of the Interior, for restoration to the public domain, lands in the States of Alabama and Mississippi not needed for naval purposes	1007	2
Nelson, John. On bill (H. R. 6069) to reimburse him for money paid in 1863 to avoid a draft	755	1
Net proceeds of the sales and other disposition of the public lands made and to be made therein by the United States, which shall hereafter be stated and certified to the Treasury Department for payment. On the bill (S. 2803) fixing times when, regulating the manner in which, and declaring the character of the accounts between the United States and the several public-land States, relative to the	1043	2
Newberry College, Newberry, S. C. On bill (S. 917) for the relief of	848	2
New Mexico Mounted Volunteers. On bill (H. R. 962) for the relief of Capt. Ceran St. Vrain's Company of	983	2
Newport News, Va. On bill (S. 915) for the erection of a public building for the use of the custom-house and post-office at	851	2
Northrup and Chick. On bill (S. 2365) for the relief of	753	1
Northwestern Branch Home. On amendment to bill (H. R. 8518) in relation to the	841	2
Norwood, William. On bill (S. 1725) granting a pension to	813	1

Subject.	No.	Vol.
O.		
Oakland, Cal. On bill (S. 2754) to provide for the purchase of a site and the erection of a public building thereon at	937	2
Officers of the United States. On bill (H. R. 8704) to regulate bonds of.	1022	2
Oklahoma, etc. On bill (S. 2273) to provide for the payment of certain claims for compensation for publishing advertisements of the list of lands in the Territory of	795	1
Olsen, Thorwald. On bill (H. R. 4012) for the relief of	783	1
Oregon State Soldiers' Home at Roseburg, Oreg., certain cannon, etc. On joint resolution (H. Res. 227) authorizing the Secretaries of War and of the Navy to donate to the	974	2
Osgood, James H. On bill (S. 2654) granting an increase of pension to	869	2
Ott, Catharine. On bill (H. R. 6868) for the relief of	834	2
P.		
Palmer, H. K. On bill (S. 2731) granting a pension to	964	2
Papers (useless) in Executive Departments. On disposition of	1048	2
Parsons, Marilla. On bill (H. R. 3988) granting a pension to	914	2
Pension claims. On bill (H. R. 3511) concerning the weight of evidence in	730	1
Pensions. On bill (H. R. 233) to supplement the act of June 27, 1890, as to	766	1
Personnel of the Navy and Marine Corps of the United States. On bill (S. 2575) to reorganize and increase the efficiency of the	770	1
Peoria, Piankeshaw, Wea, and Kaskaskia tribes of Indians against the United States. On bill (S. 2084) to refer to the Court of Claims the claims of the confederated	868	2
Pinney, Jesse C. On bill (H. R. 6430) granting a pension to	942	2
Porter, Joseph. On bill (S. 2141) granting a pension to	820	1
Porter, Pauline M. On bill (H. R. 862) granting a pension to	835	2
Presbyterian church of Bethel Springs, Tenn. On bill (H. R. 725) for the relief of the trustees of the	979	2
Provisional government of foreign countries and places acquired by treaty or otherwise, etc. On bill (S. 1309) to provide for the	772	1
Public lands, etc. On bill (H. R. 8490) to regulate the engrossing and recording of patents for	808	2
Public lands, etc. On joint resolution (H. Res. 92) to print and bind in full sheep 1,000 copies each of volumes 13 to 19, inclusive, of the Decisions of the Department of the Interior relating to	856	2
Public lands from private entry, and for other purposes, approved March 2, 1889. On bill (H. R. 7489) to amend section 3 of an act to withdraw certain	719	1
Public surveys, etc. On bill (H. R. 8504) to improve the	1021	2
Putman, Eunice. On bill (H. R. 2051) granting a pension to	842	2
Putnam, De Witt. On bill (S. 2041) for the relief of	818	1
Putman, John J. On bill (H. R. 5111) granting a pension to	805	1
R.		
Reed, Caroline. On bill (S. 1707) granting a pension to	980	2
Reed, Thomas B. On bill (H. R. 3150) for the relief of	895	2
Registers and receivers of land offices. Report of the experts of the joint commission of Congress, etc., concerning the duties of		
Regulation of steam vessels," etc. On bill (H. R. 2377) to amend "An act to amend section 4,400 of Title LII of the Revised Statutes of the United States concerning the	972	2
Relief of bona fide purchasers of land in section 36, township 1 north, range 9 west (San Bernardino meridian), in the State of California. On bill (S. 2082) for the	792	1
Reorganization of the Department of State and the consular and diplomatic service. On bill (S. 1854) to increase the efficiency of the foreign service of the United States, and to provide for the	886	2
Report No. 331, Fifty-third Congress, second session, with the index thereto. On Senate resolution to print 10,000 extra copies of Senate.	1029	2

Subject.	No.	Vol.
Report No. 831, Fifty-third Congress, third session, etc. On Senate resolution to print in paper covers 2,000 copies of Senate	1037	2
Report No. 1379, Fifty-second Congress, second session. On Senate resolution to print 500 copies of Senate	931	2
Report of the Select Committee to Establish the University of the United States. On Senate resolution to print 2,000 copies of the	747	1
Reports and hearings had before the Committee on Interstate Commerce from the year 1889, etc. On Senate resolution to print all	859	2
Revised Statutes of the United States. On bill (H. R. 8754) to repeal section 194 of the	875	2
Revised Statutes of the United States. On bill (H. R. 7057) to repeal section 229 of the	932	2
Reynolds, Abel S. On bill (S. 1746) to relieve him from the charge of desertion	903	2
Reynolds, Pickens T. On bill (H. R. 5802) granting a pension to	732	1
Rhea, Hiram R. On bill (H. R. 4658) granting a pension to	879	2
Rhoades, Mrs. Eunice Ida. On bill (S. 2122) granting a pension to	815	1
Rice, Simon. On bill (H. R. 3194) to amend the record of	929	2
Richards, Bartlett, of Nebraska. On amendment to bill (H. R. 8479) in relation to balance due him for beef cattle	884	2
Roebuck, Sarah E. On bill (H. R. 6131) granting a pension to	890	2
Rose, John G. On bill (S. 1440) for the relief of	744	1
Ryan, Michael. On bill (H. R. 8391) for the relief of	1004	2
Russey, Charles W. On bill (S. 2594) for the relief of	993	2
S.		
Salaries and allowances of the postmasters at Guthrie, Oklahoma City, and Kingfisher, in Oklahoma Territory, etc. On bill (H. R. 7020) to readjust the	880	2
Scale of wages of certain employees of the Government Printing Office, etc. On bill (S. 2422) to revise the	778	1
Seaver, Nettie N. On bill (S. 2555) granting a pension to	774	1
Senate Library, etc. On letter of Anson G. McCook, late Secretary of the Senate, transmitting catalogue of books in the	858	2
Sexton, David H. On bill (H. R. 5301) granting a pension to	1031	2
Shannon, A. M., & Co. On the bill (S. 316) for the relief of	951	2
Shipping Commission," approved August 19, 1890, and for other purposes. On bill (H. R. 5603) to amend an act entitled "An act to amend the laws relative to	811	1
Sippell, Louisa M. On bill (H. R. 6076) granting a pension to	878	2
Skinner, John H. On bill (S. 2647) to amend the military record of	857	2
Slums of Cities. On Senate concurrent resolution to print and bind in cloth 6,000 additional copies of Seventh Special Report relating to	721	1
Smith, Charity Ann. On bill (H. R. 575) granting a pension to	955	2
Smith, Margaret, Mrs. On bill (H. R. 5322) granting a pension to	780	1
Snow, ice, dirt, sand, and gravel from sidewalks in the cities of Washington and Georgetown, etc. On bill (S. 2621) for the removal of	793	1
Snow, ice, and dirt from the sidewalks in the District of Columbia. On joint resolution (S. R. 108) to empower Commissioners of the District of Columbia to make and enforce regulations to secure the removal of	794	1
Snyder, Joseph W. On bill (H. R. 7028) granting a pension to	981	2
Society of American Florists. On bill (H. R. 5740) incorporating the	803	1
Soeckel, Helmuth F. On bill (S. 2090) to remove the charge of desertion, etc	1006	2
Soldiers' Home in the District of Columbia to sell certain property known as the "Asylum Lot," etc. On bill (H. R. 8277) to authorize the Board of Commissioners of the	861	2
Soldiers, sailors, marines, and other persons who have heretofore made claim to public land in certain cases. On bill (S. 2402) for the relief of	1009	2
Solicitor of Internal Revenue. On bill (H. R. 8939) to abolish the office of	1024	2
South Dakota, Nebraska, and Kansas. On bill (S. 2541) to provide for the sinking of artesian wells in	944	2

Subject.	No.	Vol.
South Omaha, Nebr. On bill (H. R. 109) to provide for the purchase of a site and the erection of a building thereon at	826	1
Stahel, Maj.-Gen. Julius H. On bill (H. R. 6901) granting a pension to	961	2
Statues of John Stark and Daniel Webster, etc. On Senate concurrent resolution to print and bind in one volume 16,500 copies of the proceedings in Congress upon the acceptance of the	757	1
Street railroad companies in the District of Columbia. On the bill (S. 2545) to amend the charters of certain	906	2
Stewart, James. On bill (H. R. 5224) for the relief of	970	2
Sullivan, John Clyde. On bill (S. 1655) for the relief of	739	1
Sweeny, Eugenia R. On bill (S. 2511) granting an increase of pension to	802	1
Swoope, Susannah P. On bill (S. 2640) to carry out the findings of the Court of Claims in the case of	1000	2
T.		
Tassin, Mary. On bill (S. 2664) granting a pension to	935	2
Tenant, Samuel F. On bill (H. R. 7359) granting a pension to	864	2
Thornhill, French W., Dr. On bill (H. R. 1581) granting a pension to	943	2
Thunot, Victor, Mrs. On bill (H. R. 3203) for the relief of	748	1
Todd, William B., deceased. On bill (S. 329) for the relief of the estate of	828	1
Toll, Capt. Isaac D. On bill (H. R. 6659) granting a pension to	959	2
Tubbs, Robert B. On bill (H. R. 5206) for the relief of	1014	2
U.		
UnionPacific Railway Company has passed into the hands of a receiver, etc. On Senate resolution of October 13, 1893, authorizing committee to investigate and report to the Senate if the	830	1
V.		
Veach, James P. On bill (S. R. 49) for the relief of	1027	2
Vedder, Dollie E. On bill (H. R. 4320) granting a pension to	714	1
W.		
Wales, Philip S., Medical Director United States Navy. On bill (S. 2682) for relief of	850	2
Wancop, Abraham O. On bill (H. R. 2130) for the relief of	1015	2
Warren, Alice. On bill (S. 2542) granting a pension to	814	1
Washington and Marlboro Electric Railway Company of Maryland to extend its road into and within the District of Columbia. On the bill (H. R. 8698) to authorize the	977	2
Washington Gaslight Company at $1 per 1,000 cubic feet. On the bill (H. R. 4279) fixing the maximum price to be charged for gas sold by the	1038	2
Wayland, James H. On bill (S. 2096) for the relief of	845	2
Webster, Jane. On bill (H. R. 3977) granting a pension to	994	2
Weeks, Julia. On bill (H. R. 6433) granting a pension to	905	2
Weight of evidence in pension claims. On bill (H. R. 3511) concerning	730	1
Wessels, Caroline E. On bill (S. 2599) granting a pension to	816	1
Wharton, Francis, deceased. On amendment to the bill (H. R. 8518) to pay $7,500 to the executors of	870	2
Whiting, Mrs. Jane Stewart. On bill (S. 2415) granting a pension to	762	1
Willbur, James M. On bill (S. 932) for the relief of	758	1
Williams, Mary R. On bill (H. R. 7602) granting a pension to	840	2
Williamson, Alexander. On bill (H. R. 8099) granting a pension to	956	2
Wilson, Theodore D., ex-chief constructor United States Navy. On bill (S. 2356) for the relief of	740	1
Wilson, Angus V. On bill (H. R. 7997) to amend the military record of	1026	2
Winnebago Indians, in Minnesota. On bill (H. R. 7731) for the relief of certain	738	1

Subject.	No.	Vol.
Witherby & Gaffney. On bill (H. R. 4507) for the relief of	947	2
Woodruff, Israel C. On bill (S. 2441) for the relief of the heirs of the late	985	2
Y.		
Young, Thomas L. On bill (S. 822) for the relief of the legal representatives of	768	1
Yuma, Colo. On bill (H. R. 7995) to perfect the title to a quarter section of land in the town of	727	1

TABLE

OF THE

REPORTS MADE BY THE COMMITTEES

FOR THE

THIRD SESSION OF THE FIFTY-THIRD CONGRESS.

Subject.	No.	Vol.
COMMITTEE ON AGRICULTURE AND FORESTRY.		
On bill (H. R. 7910) to provide for the inspection of live cattle, hogs, and the carcasses and products thereof, etc	751	1
On Senate resolution in relation to agricultural depression; causes and remedies	787	1
On bill (H. R. 5740) incorporating the Society of American Florists	803	1
On bill (S. 2541) to provide for the sinking of artesian wells in the arid districts of South Dakota, Nebraska, and Kansas	944	2
On Senate resolution in relation to agricultural depression; its causes and remedies (parts 1 and 2). "Cotton"	986	2
COMMITTEE ON APPROPRIATIONS.		
On bill (H. R. 8125) making appropriations for the Military Academy	729	1
On bill (H. R. 8226) making appropriations for the Army	750	1
On bill (H. R. 8093) making appropriations for fortifications and other works of defense	759	1
On bill (H. R. 8234) making appropriations for the diplomatic and consular service of the United States	843	2
On bill (H. R. 8388) making appropriations for the District of Columbia	844	2
On bill (H. R. 8272) making appropriations for the service of the Post-Office Department	874	2
On bill (H. R. 8479) making appropriations for current and contingent expenses and fulfilling treaty stipulations with Indian tribes	900	2
On bill (H. R. 8727) making appropriations for the Department of Agriculture	924	2
On bill (H. R. 8518) making appropriations for sundry civil expenses of the Government	950	2
On bill (H. R. 8767) making appropriations for the legislative, executive, and judicial expenses of the Government	965	2
On bill (H. R. 8665) making appropriations for the naval service	1020	2
COMMITTEE ON CLAIMS.		
On bill (H. R. 5659) for the relief of Zimri Elliott	728	1
On bill (S. 932) authorizing the Secretary of the Treasury to adjust and settle the account of James M. Wilbur with the United States	758	1
On bill (S. 119) for the relief of Sidney W. Moss	784	1
On bill (S. 1115) to authorize the investigation by the Attorney-General of certain claims alleged to be due the late proprietors of the Knoxville Whig for advertising, etc	785	1

Subject.	No.	Vol.
COMMITTEE ON CLAIMS—continued.		
On bill (S. 1894) for the relief of Warren Hall	821	1
On bill (S. 490) for the relief of Ames & Detrick, of San Francisco, Cal	822	1
On bill (S. 278) to empower Robert Adger and others to bring suit in the Court of Claims for rent alleged to be due them	823	1
On bill (S. 2410) for the relief of the Citizens' Bank of Louisiana	824	1
On bill (S. 1341) for the relief of J. J. Bailey	827	1
On bill (S. 2096) for the relief of James H. Wayland	845	2
On bill (S. 917) for the relief of Newberry College, Newberry, S. C	848	2
On bill (S. 593) to permit Anna M. Colman, a widow, to prosecute a claim	862	2
On bill (S. 1360) for the relief of the estate of John R. Bigelow	885	2
On joint resolution (S. R. 9) for the relief of the Continental Fire Insurance Company, and others	891	2
On bill (S. 1530) for the relief of James Grace	904	2
On bill (S. 1861) for the relief of George F. Brott	909	2
On bill (H. R. 6852) for the relief of William E. Bond	917	2
On bill (S. 909) for the relief of Thomas Antisell	939	2
On amendment to the bill (H. R. 8518) making appropriations for sundry civil expenses of the Government, etc., in relation to the French spoliation claims, etc	946	2
On bill (H. R. 4507) for the relief of Witherby & Gaffney	947	2
On bill (S. 316) for the relief of A. M. Shannon & Co	951	2
On bill (S. 584) for the relief of Goff A. Hall, etc	957	2
On bill (S. 2694) for the relief of the Baptist Church at Corinth, Miss.	966	2
On bill (S. 2695) for the relief of the Methodist church at Brandon, Miss	967	2
On bill (H. R. 1075) for the relief of Merrill Denham	968	2
On bill (H. R. 725) for the relief of the trustees of the Presbyterian church of Bethel Springs, Tenn	979	2
On bill (S. 377) for the relief of Robert C. Murphy	988	2
On bill (H. R. 561) for the relief of John and Sarah Griffin	989	2
On bill (H. R. 526) for the relief of Joseph Haxthausen	990	2
On bill (S. 2756) for the relief of Oliver M. Blair, administrator of Thomas P. Blair	991	2
On bill (S. 2640) to carry out the findings of the Court of Claims in the case of Susannah P. Swoope	1000	2
On bill (S. 1322) for the relief of William Leach	1001	2
On bill (H. R. 7603) for the relief of Charles Deal	1008	2
On amendment to bill (H. R. 8665) making appropriations for the naval service, etc., in relation to owners of steamships *De Soto* and *Bienville*	1010	2
On joint resolution (S. R. 10) to direct the Secretary of the Treasury to pay to the governor of the State of West Virginia the sum appropriated by the act of Congress entitled "An act to credit and pay to the several States and Territories and the District of Columbia all moneys collected under the direct tax levied by the act of Congress approved August 5, 1861"	1039	2
On bill (H. R. 4704) for the relief of Basil Moreland	1042	2
COMMITTEE ON COMMERCE.		
On bill (S. 2337) to provide an American register for the steamship *Empress*	720	1
On bill (S. 2358) to provide American registers for the vessels *Linda* and *Archer*	724	1
On amendment to bill (H. R. 8518) making provision for an additional sum of $150,000 toward the construction of Movable Dam No. 6, in the Ohio River, near Beaver River	800	1
On bill (H. R. 5603) entitled "An act to amend an act entitled 'An act to amend the laws relative to shipping commissioners,' approved August 19, 1890, and for other purposes"	811	1
On bill (H. R. 8563) to adopt special rules for the navigation of harbors, rivers, and inland waters of the United States, etc	899	2

Subject.	No.	Vol.
COMMITTEE ON COMMERCE—continued.		
On bill (H. R. 2377) to amend section 4400 of Title LII of the Revised Statutes of the United States, concerning the regulation of steam vessels, approved August 7, 1892, etc	972	2
COMMITTEE ON THE DISTRICT OF COLUMBIA.		
On bill (S. 2361) to amend an act entitled "An act to incorporate the Maryland and Washington Railway Company," etc	761	1
On bill (S. 937) for the relief of the heirs of Nathaniel Magruder	786	1
On bill (S. 2165) to amend an act entitled "An act to provide for the settlement of all outstanding claims against the District of Columbia, etc., approved June 16, 1880"	788	1
On bill (S. 2189) to regulate Canal street, etc., in the city of Washington	791	1
On bill (S. 2621) for the removal of snow, ice, dirt, sand, and gravel from sidewalks in the cities of Washington and Georgetown, etc	793	1
On joint resolution (S. R. 108) to empower the Commissioners of the District of Columbia to make and enforce regulations to secure the removal of snow, ice, etc	794	1
On amendment to bill (H. R. 8388) making appropriations to provide for the expenses of the District of Columbia	819	1
On bill (S. 329) for the relief of the estate of William B. Todd, deceased	828	1
On bill (S. 2438) making appropriation to provide for the expense of completing the Eckington Valley trunk sewer from U street, Eckington, to Lansing street, Brookland, D. C	829	1
On bill (S. 2625) for the relief of the heirs and devisees of Jonathan Kirkwood, deceased	863	2
On bill (S. 2339) to incorporate the East Washington Belt Line Railroad Company	901	2
On bill (S. 2521) to amend the charter of the Metropolitan Railroad Company of the District of Columbia	902	2
On bill (S. 2545) to amend the charters of certain street railroad companies in the District of Columbia	906	2
On bill (H. R. 8714) to incorporate the Capital Railway Company	976	2
On bill (H. R. 8698) to authorize the Washington and Marlboro Electric Railway Company, of Maryland, to extend its line of road into and within the District of Columbia	977	2
On bill (H. R. 6816) to amend the charter of the District of Columbia Suburban Railway Company	1028	2
On bill (H. R. 4279) fixing the maximum price to be charged for gas sold by the Washington Gaslight Company at the price of $1 per 1,000 cubic feet	1038	2
COMMITTEE ON EDUCATION AND LABOR.		
On bill (S. 2422) to revise the scale of wages of certain employees of the Government Printing Office	778	1
On bill (S. 2750) authorizing the appointment of a nonpartisan commission to collate information and to consider and recommend legislation to meet the problems presented by labor, agriculture, and capital	938	2
COMMITTEE ON FINANCE.		
On bill (H. R. 3203) for the relief of Mrs. Victor Thunot	748	1
Alcohol in the arts, Great Britain, Germany, Switzerland, The Netherlands, Belgium, France, Italy, Russia, Sweden, Norway, Portugal, and Austria-Hungary	760	4
Paper money and loans	831	1
On bill (S. 1231) for the relief of Betts, Nichols & Co	881	2
COMMITTEE ON FOREIGN RELATIONS.		
On bill (S. 1309) to provide for the provisional government of foreign countries and places acquired by treaty or otherwise	772	1

Subject.	No.	Vol.
COMMITTEE ON FOREIGN RELATIONS—continued.		
On bill (S. 1854) to increase the efficiency of the foreign service of the United States, and to provide for the reorganization of the Department of State and the consular and diplomatic service	886	2
On Senate resolution of July 24, 1894, relating to all papers and correspondence, diplomatic or otherwise, on file in the State Department, in connection with the arrest and imprisonment at Arequipa, Peru, of Victor H. MacCord	927	2
COMMITTEE ON INDIAN AFFAIRS.		
On bill (H. R. 7731) for the relief of certain Winnebago Indians in Minnesota	738	1
On bill (S. 2364) for the relief of Silas P. Keller	752	1
On bill (S. 2365) for the relief of Northrup and Chick	753	1
On bill (S. 2084) to refer to the Court of Claims the claims of the Confederated Peoria, Piankeshaw, Wea, and Kaskaskia tribe of Indians against the United States	868	2
On amendment to bill (H. R. 8479) for the relief of Bartlett Richards, of Nebraska	884	2
On bill (S. 1251) to accept, ratify, and confirm certain agreements heretofore concluded with certain Indians	940	2
COMMITTEE ON INTERSTATE COMMERCE.		
On bill (S. 1344) to secure aerial navigation	992	2
COMMITTEE ON THE JUDICIARY.		
On bill (H. R. 5836) to define the crimes of murder in the first and second degrees, manslaughter, rape, mutiny, and desertion, to provide punishment therefor, etc	846	2
On bill (S. 2684) to permit Howell E. Jackson, associate justice of the Supreme Court of the United States to retire, etc	872	2
On bill (H. R. 6979) to amend section 3 of an act entitled "An act to regulate the liens of judgments and decrees of the courts of the United States," approved August 1, 1888	1011	2
COMMITTEE ON MILITARY AFFAIRS.		
On bill (H. R. 6499) to establish a national military park at battlefield of Shiloh	722	1
On bill (S. 707) for the relief of Orin R. McDaniel	723	1
On bill (S. 1308) for the relief of Simeon Metz, Nathaniel Robbins, and William J. Sloan	725	1
On joint resolution (H. Res. 97) donating two obsolete cannon to the cities of Allegheny and Pittsburg, Pa	736	1
On bill (H. R. 2726) to remove the charge of desertion against Edward J. Butler	737	1
On bill (S. 2297) to provide for the reinstatement, readjustment, settlement, and payment of dues to army officers in certain cases	754	1
On bill (H. R. 6069) to reimburse John Nelson, etc	755	1
On bill (S. 1074) for the relief of the estate of Emmet Crawford, deceased	756	1
On bill (S. 472) for the relief of William W. Lowe	767	1
On bill (S. 822) for the relief of the legal representatives of Thomas L. Young	768	1
On bill (H. R. 5912) for the discharge of Julius L. Briggs	779	1
On bill (H. R. 4012) for the relief of Thorwald Olsen	783	1
On bill (H. R. 1819) to correct record of James P. McGee	810	1
On bill (S. 1469) to remove the charge of desertion from record of Amos Clark	817	1
On bill (S. 2041) for the relief of De Witt Putnam	818	1
On amendment to bill (H. R. 8518) providing for new buildings for the officers and for the housing of quartermaster stores at the Northwestern Branch Home	841	2

Subject.	No.	Vol.
COMMITTEE ON MILITARY AFFAIRS—continued.		
On bill (S. 2647) to amend the military record of John H. Skinner	857	2
On bill (H. R. 8277) to authorize the Board of Commissioners of the the Soldiers' Home in District of Columbia to sell the "Asylum Lot" on Pascagoula Bay, Mississippi	861	2
On amendment to bill (H. R. 8518) making appropriations for sundry civil expenses of the Government, etc	866	2
On bill (S. R. 113) returning to the State of Michigan certain regimental flags	867	2
On bill (S. 2372) to authorize and direct the Secretary of War to place place on file in the War Department the names of the officers and members of the Frontier Guards, etc	871	2
On amendments to bill (H. R. 8518) to increase by some $3,000 the items of appropriation for salaries of officers and employees of the Board of Managers of the National Home for Disabled Volunteer Soldiers, etc	883	2
On bill (H. R. 8153) authorizing the sale of certain property of the United States in Bristol Township, Bucks County, Pa	894	2
On bill (H. R. 3150) for the relief of Thomas B. Reed	895	2
On bill (S. 1287) for the relief of Augustus Boyd	896	2
On bill (H. R. 6244) to remove the charge of desertion from Jacob Eckert	897	2
On bill (S. 1746) for the relief of Abel S. Reynolds from charge of desertion	903	2
On bill (H. R. 8237) for the relief of William W. Buckley	908	2
On bill (S. 1864) for the relief of George W. Harbaugh	919	2
On joint resolution (H. Res. 199) relative to the medal of honor authorized by the acts of July 12, 1862, and March 3, 1863	928	2
On bill (H. R. 3194) to amend the record of Simon Rice	929	2
On bill (S. 1293) for the relief of Benjamin F. Church from a charge of desertion	930	2
On bill (H. R. 8122) for the relief of certain volunteer and regular soldiers of the late war and the war with Mexico, passed March 2, 1889	941	2
On bill (H. R. 6923) for the relief of Matthew T. Lewis	945	2
On bill (H. R. 5224) for the relief of James Stewart	970	2
On bill (H. R. 8680) granting the Mount Vernon Military Reservation to the State of Alabama for public uses, etc	971	2
On bill (H. R. 840) to correct the muster of Second Lieut. Gilman L. Johnson	975	2
On bill (H. R. 962) for the relief of Capt. Ceran St. Vrain's Company of New Mexico Mounted Volunteers	983	2
On bill (H. R. 5005) to remove charge of desertion from William Albin	984	2
On bill (S. 2441) for the relief of the heirs of the late Col. Israel C. Woodruff	985	2
On bill (H. R. 952) for the relief of Catherine Caine	997	2
On bill (H. R. 3128) for the relief of Samuel Burrell	998	2
On bill (H. R. 8391) for the relief of Michael Ryan	1004	2
On bill (S. 2090) to remove charge of desertion, and grant an honorable discharge to Helmuth F. Soeckel	1006	2
On bill (H. R. 5206) for the relief of Robert B. Tubbs	1014	2
On bill (H. R. 2130) for the relief of Abraham O. Wancop	1015	2
On bill (S. 2612) for correction of muster of George P. Corts	1016	2
On bill (H. R. 3147) granting an honorable discharge to Wilson Kale	1017	2
On bill (S. 896) for the relief of legal representatives of Michael McCann.		
On bill (S. 893) for the relief of Louis O. Faringhy	1018	2
On bill (H. R. 6928) to remove charge of desertion from record of Wear Crawford	1019	2
On bill (H. R. 7997) to amend the military record of Angus V. Wison	1025	2
On joint resolution (S. R. 49) for the relief of James P. Veach	1026	2
	1027	2
COMMITTEE ON NAVAL AFFAIRS.		
On bill (S. 1655) for the relief of John Clyde Sullivan	739	1
On bill (S. 2356) for the relief of Theodore D. Wilson	740	1
On bill (S. 1193) for the relief of John L. Broome	743	1
On bill (S. 1440) for the relief *of John G. Rose*	744	1

Subject.	No.	Vol.
COMMITTEE ON NAVAL AFFAIRS—continued.		
On bill (S. 2504) to confer upon the Superintendent of the United States Naval Academy the power to convene general courts-martial	749	1
On bill (S. 2575) to reorganize and increase the efficiency of the personnel of the Navy and Marine Corps of the United States	770	1
On bill (S. 2378) for the opening of the naval reservation in the counties of Lafayette, Suwanee, and Alachua to homestead settlement, in State of Florida	771	1
On bill (S. 2596) authorizing the Secretary of the Navy to detail officers on the retired list of the Navy and Marine Corps to duty at colleges	809	1
On bill (H. R. 8552) to authorize the appointment of cadets to the Naval Academy	847	2
On bill (S. 1908) for the benefit of Joshua Bishop	849	2
On bill (S. 2682) relating to Philip S. Wales, Medical Director United States Navy	850	2
On bill (S. 1905) for the relief of Augustus G. Kellogg	852	2
On bill (H. R. 6323) to amend the Articles for the Government of the Navy, relative to punishment on conviction by court martial	853	2
On bill (H. R. 5218) to amend the articles for the government of the Navy	854	2
On bill (S. 2589) granting cannon to the historical museum, Des Moines, Ia.	889	2
On joint resolution (S. R. 138) authorizing the Secretary of the Navy to deliver unserviceable or condemned cannon to the mayor of Burlington, Vt	973	2
On joint resolution (H. Res. 227) authorizing the Secretaries of War and of the Navy to donate to the Oregon State Soldiers' Home at Roseburg, Oreg., certain cannon, etc	974	2
On bill (H. R. 8614) to authorize the Secretary of the Navy to certify to the Secretary of the Interior, for restoration to the public domain, lands in the States of Alabama and Mississippi, etc	1007	2
COMMITTEE ON PACIFIC RAILROADS.		
On Senate resolution directing committee to investigate and report to the Senate if the Union Pacific Railway Company has passed into the hands of a receiver	830	1
COMMITTEE ON PENSIONS.		
On bill (S. 2320) granting a pension to Harriet L. Mayo	711	1
On bill (S. 1816) granting a pension to John B. Meigs	713	1
On bill (H. R. 4320) granting a pension to Dollie E. Vedder	714	1
On bill (S. 2359) granting a pension to Mary Palmer Banks	715	1
On bill (S. 1135) granting a pension to Mrs. Katherine Todd Crittenden.	716	1
On bill (S. 2342) granting a pension to Maj. Gen. John A. McClernand	717	1
On bill (S. 1240) granting a pension to Helen M. Jacob	718	1
On bill (H. R. 3511) concerning the weight of evidence in pension claims.	730	1
On bill (S. 328) granting a pension to Mrs. Martha Custis Carter	731	1
On bill (H. R. 5802) granting a pension to Pickens T. Reynolds	732	1
On bill (H. R. 5925) granting a pension to Mary Levans	733	1
On bill (S. 2415) granting a pension to Mrs. Jane Stewart Whiting	762	1
On bill (S. 2414) granting an increase of pension to Mrs. Helen Morell Carroll	763	1
On bill (S. 2199) granting a pension to Charles F. Holly	764	1
On bill (S. 2351) granting a pension to C. E. Jones	765	1
On bill (H. R. 233) to supplement the act of June 27, 1890	766	1
On bill (H. R. 3560) granting a pension to Martha A. Geer	773	1
On bill (S. 2555) granting a pension to Nettie N. Seaver	774	1
On bill (S. 2403) granting a pension to Martha Allen	775	1
On bill (H. R. 5589) granting a pension to Willis Monasco	776	1
On bill (H. R. 2561) for the relief of Moses W. Carpenter	777	1
On bill (H. R. 5322) granting a pension to Mrs. Margaret Smith	780	1
On bill (H. R. 5377) granting a pension to Richard R. Knight	781	1
On bill (H. R. 6531) granting a pension to Nancy Gabrilla Anderson	782	1
On bill (H. R. 7422) granting a pension to Mrs. Harriet Clayton	789	1

Subject.	No.	Vol.
COMMITTEE ON PENSIONS—continued.		
On bill (H. R. 6186) granting a pension to Maria Davis	790	1
On bill (H. R. 5843) granting a pension to Mary Finnerty	708	1
On bill (H. R. 4850) granting a pension to Marcus D. Box	799	1
On bill (S. 2511) granting an increase of pension to Eugenia R. Sweeny	802	1
On bill (H. R. 5194) granting a pension to G. O. Greiner	804	1
On bill (H. R. 5111) granting a pension to John J. Patman	895	1
On bill (H. R. 5994) granting a pension to Rosanna Cobb	806	1
On bill (S. R. 125) for the relief of Alder A. Tweedy	807	1
On bill (S. 244) granting a pension to James Callison	812	1
On bill (S. 1725) granting a pension to William Norwood	813	1
On bill (S. 2542) for the relief of Edward Warren	814	1
On bill (S. 2122) granting a pension to Mrs. Eunice Ida Rhoades	815	1
On bill (S. 2599) granting a pension to Caroline E. Wessels	816	1
On bill (S. 2141) granting a pension to Joseph Potter	820	1
On bill (S. 2341) granting a pension to Phillip Kershner	832	2
On bill (S. 2120) for the relief of W. T. Holman	833	2
On bill (H. R. 6868) for the relief of Catherine Ott	834	2
On bill (H. R. 862) granting a pension to Pauline M. Pooler	835	2
On bill (S. 2207) granting an increase of pension to Robert Kiracofe	836	2
On bill (S. 1639) granting a pension to Nancy G. Allabach	837	2
On bill (S. 2539) granting a pension to Marian C. Gurney	838	2
On bill (H. R. 6974) granting a pension to Mary L. Clark	839	2
On bill (H. R. 7602) granting a pension to Mary R. Williams	840	2
On bill (H. R. 2051) granting a pension to Eunice Putman	842	2
On bill (H. R. 7359) granting a pension to Samuel F. Tenant	864	2
On bill (S. 2654) granting an increase of pension to James H. Osgood	869	2
On bill (S. 2671) granting a pension to Florence W. Buskirk	873	2
On bill (H. R. 6585) granting a pension to Elizabeth Moore English	876	2
On bill (S. 2371) granting a pension to Samuel Goldwater	877	2
On bill (H. R. 6076) granting a pension to Louisa M. Sippell	878	2
On bill (H. R. 4658) granting a pension to Hiram R. Rhea	879	2
On bill (S. 1238) granting a pension to Catherine Dillon	882	2
On bill (S. 2460) granting a pension to Catherine R. Jardine	887	2
On bill (S. 2148) granting a pension to Elizabeth A. Granger	888	2
On bill (H. R. 6131) granting a pension to Sarah E. Roebuck	890	2
On bill (S. 2491) granting a pension to Mary A. Hall	893	2
On bill (H. R. 6985) granting a pension to William Armstrong	898	2
On bill (H. R. 6433) granting a pension to Julia Weeks	905	2
On bill (S. 2696) granting a pension to William B. Matchett	907	2
On bill (H. R. 5260) granting a pension to Thomas Corigan	910	2
On bill (H. R. 5377) granting a pension to Richard R. Knight	911	2
On bill (H. R. 3988) granting a pension to Marilla Parsons	914	2
On bill (H. R. 5642) granting a pension to Elizabeth Brower	915	2
On bill (H. R. 6417) granting a pension to Mary E. Hamilton	918	2
On bill (S. 1027) granting a pension to Mary Clare Kelly	920	2
On bill (H. R. 1229) granting a pension to Bridget Devine	922	2
On bill (S. 1684) granting a pension to Robert Gamble	926	2
On bill (S. 2732) granting a pension to William Brown	934	2
On bill (S. 2664) granting a pension to Mary Tassin	935	2
On bill (H. R. 6430) granting a pension to Jesse C. Pinney	942	2
On bill (H. R. 1581) granting a pension to Dr. French W. Thornhill	943	2
On bill (H. R. 2118) granting a pension to John B. Leach	953	2
On bill (H. R. 4935) granting a pension to Louisa C. Conwell	954	2
On bill (H. R. 575) granting a pension to Charity Ann Smith	955	2
On bill (H. R. 8099) granting a pension to Alexander Williamson	956	2
On bill (H. R. 5565) granting a pension to Joseph R. Brooks	958	2
On bill (H. R. 6659) granting a pension to Capt. Isaac D. Toll	959	2
On bill (H. R. 6646) granting a pension to Albert Munson	960	2
On bill (H. R. 6901) granting a pension to Maj. Gen. Julius H. Stahel	961	2
On bill (H. R. 1716) granting a pension to Ellen Carney	962	2
On bill (H. R. 8811) granting a pension to James Jones	963	2
On bill (S. 2731) granting a pension to H. K. Palmer	964	2

Subject.	No.	Vol.
COMMITTEE ON PENSIONS—continued.		
On bill (H. R. 5260) granting a pension to Thomas Corigan	969	2
On bill (S. 2519) granting a pension to Adelaide Morris	978	2
On bill (H. R. 3977) granting a pension to Jane Webster	994	2
On bill (H. R. 8884) granting a pension to Alexander M. Laughlin	995	2
On bill (H. R. 6951) granting a pension to Susannah Kepford	996	2
On bill (S. 1707) granting a pension to Caroline Reed	980	2
On bill (H. R. 7028) granting a pension to Joseph W. Snyder	981	2
On bill (H. R. 8127) granting a pension to Hosea Brown	987	2
On bill (H. R. 6461) granting a pension to Mrs. Mary Button	1002	2
On bill (H. R. 8264) granting a pension to Saloma Mangold	1003	2
On bill (S. 2746) granting a pension to Napoleon B. Breedlove	1005	2
On bill (H. R. 6565) granting a pension to Mary Jane Lynn	1030	2
On bill (H. R. 5301) granting a pension to David H. Sexton	1031	2
On bill (H. R. 7671) granting a pension to Elizabeth L. Markham	1032	2
On bill (H. R. 8690) granting a pension to Carrie H. Greene	1036	2
On bill (H. R. 7249) granting a pension to Abner Abercrombie	1040	2
On bill (H. R. 8888) granting a pension to Williamson Durley	1041	2
On bill (H. R. 8245) to pension Annie J. Corbett	1044	2
COMMITTEE ON POST-OFFICES AND POST-ROADS.		
On bill (H. R. 5368) for the relief of H. W. McConnell	801	1
On bill (H. R. 7020) to readjust the salaries and allowances of the postmasters at Guthrie, Oklahoma City, and Kingfisher, in Oklahoma Territory	880	2
On bill (S. 2377) for the relief of H. F. Menough	921	2
On bill (S. 2503) for the relief of James Curran	936	2
On bill (S. 2594) for the relief of Charles W. Russey	993	2
On bill (H. R. 995) for the relief of J. M. Billings	999	2
COMMITTEE ON PRINTING.		
On Senate resolution to print 2,000 copies of the Report of the National Academy of Sciences for 1893, etc	712	1
On Senate concurrent resolution to print and bind in cloth 6,000 additional copies of Seventh Special Report relating to Slums of Cities	721	1
On Senate concurrent resolution to print and bind in cloth 3,500 extra copies of Senate Ex. Doc. No. 119, Fifty-third Congress, second session, etc	734	1
On House concurrent resolution to print in one volume 9,500 extra copies of the report of the Committee on Banking and Currency of the House of Representatives on bill H. R. 8149, etc	742	1
On Senate resolution to print as many copies of the fourth edition of the coinage laws of the United States as shall not exceed in cost $500	745	1
On Senate resolution to print as many copies as can be printed for $500 of the pamphlet issued by the Treasury Department containing the income-tax law, etc	746	1
On Senate resolution to print 2,000 copies of the report of the Select Committee to establish the University of the United States	747	1
On Senate concurrent resolution to print 16,500 copies of the proceedings of Congress upon the acceptance of the statues of John Stark and Daniel Webster	757	1
On Senate resolution to print as a Senate document the usual number of the statements presented by the Choctaw and Chickasaw Freedmen to the commission known as the "Dawes Commission"	796	1
On Senate resolution to print 2,500 extra copies of the annual report of the Board of Visitors to the United States Military Academy at West Point for the year 1894	797	1
On joint resolution (H. Res. 92) to print and bind in full sheep 1,000 copies each of volumes 13 to 19, inclusive, of Decisions of the Department of the Interior relating to public lands, etc	856	2

Subject.	No.	Vol.
COMMITTEE ON PRINTING—continued.		
On letter of Anson G. McCook, late Secretary of the Senate, submitting a catalogue of books in the Senate library, including those stored in the basement, prepared under his direction by E. T. Cressey, late assistant librarian of the Senate	858	2
On Senate resolution to print 100 copies of all reports of and hearings had before Committee on Interstate Commerce from the year 1889 (inclusive) to date	859	2
On Senate concurrent resolution to print 5,000 copies of the Flags of Maritime Nations, etc	860	2
On amendment to bill (H. R. 8518) making appropriations for sundry civil expenses of the Government, etc., to pay to the executors of Francis Wharton, deceased, the sum of $7,500	870	2
On Senate concurrent resolution to print 20,000 extra copies of the report on the Chicago strike of June and July, 1894	912	2
On message of the President transmitting, in response to resolution of the Senate of December 19, 1894, the records of the extradition proceedings in the case of General Ezeta	913	2
On Senate resolution to print 500 copies of Senate report No. 1379, Fifty-second Congress, second session, etc	931	2
On Senate resolution to print 5,500 copies of the report of the Committee on Agriculture and Forestry on "Cotton"	1013	2
On Senate resolution to print 10,000 extra copies of Senate report No. 331, Fifty-third Congress, second session, with the index therete	1029	2
On Senate resolution to print 2,000 copies of Senate report No. 831, Fifty-third Congress, third session, relating to paper money and loans, etc	1037	2
On Senate resolution to print 500 additional copies of Senate Mis. Doc. 278, second session Fifty-third Congress	1046	2
On Senate resolution directing an investigation of all the facts and circumstances connected with the contract of the National Lithographic Company of Washington, D. C., for the publication of the Patent Office Gazette, etc	1047	2
COMMITTEE ON PRIVILEGES AND ELECTIONS.		
On joint resolution (H. Res. 20) proposing an amendment to the Constitution of the United States providing that Senators shall be elected by the people of the several States (views of the minority)	916	2
COMMITTEE ON PUBLIC BUILDINGS AND GROUNDS.		
On joint resolution (S. R. 123) authorizing the mayor and city council of Baltimore to occupy for a period of five years and erect a building thereon, a lot in the city of Baltimore owned by the United States	825	1
On bill (H. R. 109) to provide for the purchase of a site and the erection of a public building thereon at South Omaha, Nebr	826	1
On bill (S. 915) for the erection of a public building for the use of the custom-house and post-office at Newport News, Va	851	2
On bill (S. 2754) to provide for the purchase of a site and the erection of a public building thereon at Oakland, Cal	937	2
COMMITTEE ON PUBLIC LANDS.		
On bill (H. R. 7489) to amend section 3 of an act to withdraw certain public lands from private entry, etc., approved March 2, 1889	719	1
On bill (H. R. 3476) granting a corporate charter to the Northern Pacific Railroad Company, etc	726	1
On bill (H. R. 7365) to perfect the title to a quarter section of land in the town of Yuma, Colo	727	1
On bill (S. 2433) to provide for the opening of certain abandoned military reservations, etc., approved August 23, 1894	735	1
On bill (H. R. 121) to forfeit certain lands heretofore granted for the purpose of aiding in the construction of railroads, etc	741	1

Subject.	No.	Vol.
COMMITTEE ON PUBLIC LANDS—continued.		
On bill (S. 2082) for the relief of bona fide purchasers of land in section 36, township 1 north, range 9 west (San Bernardino meridian), in California, etc	792	1
On bill (S. 2273) to provide for the payment of certain claims for compensation for publishing advertisements of the list of lands in the Territory of Oklahoma, etc	795	1
On bill (S. 2463) to grant a township of land to the State of Mississippi for the use of the Institute and College for Girls	855	2
On bill (S. 2699) for the encouragement of education in the State of Mississippi	892	2
On bill (H. R. 4244) to confirm cash entries of offered lands	948	2
On amendment to bill (H. R. 8518) making appropriations for sundry civil expenses of the Government in relation to second homestead entry on any of the public lands of the United States	949	2
On bill (S. 2714) granting certain lands in the abandoned military reservation at Fort Maginnis, Fergus County, Mont., to the State of Montana for a soldiers' home	982	2
On bill (S. 2402) for the relief of soldiers, sailors, marines, etc	1009	2
On bill (S. 2799) granting to the State of Kansas the Fort Hays Military Reservation in said State, etc	1012	2
On bill (S. 2803) fixing times when, regulating the manner in which, and declaring the character of the accounts, etc., which shall be hereafter stated and certified to the Treasury Department for payment	1043	2
COMMITTEE ON TERRITORIES.		
On amendment to bill (H. R. 8518) making appropriations for the sundry civil expenses of the Government, in relation to the destruction of the eggs of game, wild fowl, etc	923	2
On bill (S. 957) for the relief of C. J. Baronett	925	2
On bill (S. 1380) for the relief of Matthew McGuirk, of Los Angeles, Cal	1045	2
SELECT COMMITTEE ON FORD'S THEATER DISASTER.		
On amendment to the bill (H. R. 8518) relating to the investigation of the Ford's Theater disaster	933	2
JOINT COMMISSION OF CONGRESS TO INQUIRE INTO THE STATUS OF LAWS ORGANIZING THE EXECUTIVE DEPARTMENTS.		
On bill (H. R. 8491) to repeal section 2 of the act of May 12, 1880, relating to contested land cases	769	2
On bill (H. R. 8490) to regulate the engrossing and recording of patents for public lands, etc	808	2
On bill (H. R. 8716) to amend section 3711 of the Revised Statutes, concerning purchases of coal and wood for the Departments, etc	865	2
On bill (H. R. 8754) to repeal section 194 of the Revised Statutes of the United States	875	2
On bill (H. R. 7057) to repeal section 229 of the Revised Statutes of the United States, etc	932	2
Communication from Alex. M. Dockery, chairman Joint Commission, etc., to the head of each of the Executive Departments, etc	952	2
On bill (H. R. 8504) to improve the public surveys, etc	1021	2
On bill (H. R. 8704) to regulate bonds of officers of the United States, etc	1022	2
Submit report of experts concerning the duties of registers and receivers of land offices	1023	2
On bill (H. R. 8939) to abolish the office of Solicitor of Internal Revenue, etc	1024	2
Submit report and recommendations of the experts with reference to the method of collecting customs and rendering the accounts to the Auditor of the Treasury	1033	2

Subject.	No.	Vol.
JOINT COMMISSION OF CONGRESS TO INQUIRE INTO THE STATUS OF LAWS ORGANIZING THE EXECUTIVE DEPARTMENTS—continued.		
Submit report and recommendations of the experts of the commission with reference to preserving copies of letters written in various Departments of the Government	1034	2
Submit report and recommendations of the experts of the commission with reference to checking paid money orders against the reports of issue, etc	1035	2
JOINT COMMISSION ON DISPOSITION OF USELESS PAPERS IN EXECUTIVE DEPARTMENTS.		
On report of the Acting Secretary of the Treasury in regard to the accumulations in the Treasury Department of old papers, etc	1048	2

REPORTS OF COMMITTEES, BY WHOM MADE, AND FROM WHAT COMMITTEE.

COMMITTEE ON AGRICULTURE AND FORESTRY.

No.

By Mr. George (parts 1 and 2) 986
By Mr. Peffer 751, 787, 944
By Mr. Proctor 803

COMMITTEE ON APPROPRIATIONS.

By Mr. Cockrell 950, 965
By Mr. Call 759, 900, 924
By Mr. Gorman 844, 1020
By Mr. Blackburn 750, 843, 874
By Mr. Brice 729

COMMITTEE ON CLAIMS.

By Mr. Pasco 848, 885, 904, 917, 939, 946, 947, 968, 979, 988, 989, 990, 1008, 1010, 1039
By Mr. Caffery 824, 951, 957, 1001
By Mr. McLaurin 891, 966, 967
By Mr. Mitchell 758, 784, 785, 823, 1000, 1042
By Mr. Stewart 821, 822, 862
By Mr. Peffer 728, 827, 845, 909, 991

COMMITTEE ON COMMERCE.

By Mr. White 811
By Mr. Frye 899, 972
By Mr. Dolph 724
By Mr. Quay 720, 800

COMMITTEE ON THE DISTRICT OF COLUMBIA.

By Mr. Faulkner 788, 906
By Mr. Hunton 863, 1038
By Mr. Martin 786, 791, 819, 828
By Mr. McMillan 761, 901, 902, 976, 977, 1028
By Mr. Proctor 793, 794, 829

COMMITTEE ON EDUCATION AND LABOR.

By Mr. Kyle 778
By Mr. Perkins 938

COMMITTEE ON FINANCE.

By Mr. Voorhees 748, 760, 831
By Mr. McPherson 881

COMMITTEE ON FOREIGN RELATIONS.

By Mr. Morgan 886
By Mr. Davis 772, 927

COMMITTEE ON INDIAN AFFAIRS.

No.
By Mr. Roach 940
By Mr. Blanchard 738, 752, 753, 884
By Mr. Platt 868

COMMITTEE ON INTERSTATE COMMERCE.

By Mr. Brice 992

COMMITTEE ON THE JUDICIARY.

By Mr. Vilas 846, 872, 1011

COMMITTEE ON MILITARY AFFAIRS.

By Mr. Bate 722, 783, 810, 818, 857, 894, 929, 930, 971, 1018, 1019, 1049
By Mr. Cockrell 723, 779
By Mr. Palmer 817, 908, 997, 998
By Mr. Mitchell, of Wisconsin 841, 861, 867, 883, 919, 975, 983
By Mr. Pasco 725, 871, 903, 941, 945, 984, 1017, 1025, 1026
By Mr. Hawley 866, 1006, 1027
By Mr. Cameron 736, 737, 895, 896, 1016
By Mr. Manderson 756, 767, 768, 897, 985, 1014, 1015
By Mr. Davis 754, 755, 928, 970

COMMITTEE ON NAVAL AFFAIRS.

By Mr. McPherson 740, 809, 1007
By Mr. Butler 770, 771, 847
By Mr. Blackburn 849, 850, 852, 853, 854
By Mr. Gibson 743, 744, 749
By Mr. Hale 973
By Mr. Perkins 739, 889, 974

COMMITTEE ON PACIFIC RAILROADS.

By Mr. Brice 830

COMMITTEE ON PENSIONS.

By Mr. Palmer ..... 711, 714, 715, 716, 717, 718, 730, 731, 732, 733, 766, 798, 799, 804, 805, 806, 807, 813, 814, 815, 837-840, 842, 910, 911, 922 (for Mr. Gallinger), 926, 942, 943, 959, 960, 961, 962, 963, 994, 995, 996, 1036
By Mr. Camden 920
By Mr. Martin 775, 776, 777, 833, 898, 918, 958, 981, 1002, 1003, 1005
By Mr. Peffer 907, 914, 634, 953, 954
By Mr. Hansbrough 935
By Mr. Gallinger ..... 713, 762, 763, 764, 765, 773, 774, 780, 781, 782 789, 802, 812, 816, 820, 832, 834, 835 (for Mr. Brice), 836 (for Mr. Brice), 864, 869, 873, 877, 878, 879, 882 (for Mr. Palmer), 890, 905, 955, 964, 969, 978, 980, 987, 1031, 1032, 1040 (for Mr. Palmer), 1041 (for Mr. Palmer), 1044
By Mr. Hawley 876, 887, 888, 893, 956
By Mr. Quay 790, 915, 1030

COMMITTEE ON POST-OFFICES AND POST-ROADS.

By Mr. Vilas 936
By Mr. Mills 801, 880, 993
By Mr. Mitchell, of Oregon 999
By Mr. Washburn 921

COMMITTEE ON PRINTING.

By Mr. Gorman 712, 721, 745, 746, 747, 757, 796, 797, 856, 858, 859, 860, 870, 912, 913, 931, 1013, 1029, 1037, 1046, 1047
By Mr. Manderson 734, 742

COMMITTEE ON PRIVILEGES AND ELECTIONS.

By Mr. Turpie (views of the minority) 916

COMMITTEE ON PUBLIC BUILDINGS AND GROUNDS.

No.
By Mr. Daniel 851
By Mr. Blanchard 825, 826
By Mr. Carey 937

COMMITTEE ON PUBLIC LANDS.

By Mr. Berry (views of the minority) 741
By Mr. Pasco 735
By Mr. Martin 792, 795, 948, 949, 1009, 1022, 1043
By Mr. McLaurin 855, 892
By Mr. Allen 719
By Mr. Carey 727
By Mr. Power 726, 982

COMMITTEE ON TERRITORIES.

By Mr. Faulkner 923
By Mr. White 925, 1045

SELECT COMMITTEE ON FORD'S THEATER DISASTER.

By Mr. Manderson 933

JOINT COMMISSION OF CONGRESS TO INQUIRE INTO THE STATUS OF THE LAWS ORGANIZING THE EXECUTIVE DEPARTMENTS.

By Mr. Cockrell 769, 808, 865, 875, 932, 952, 1021, 1022, 1023, 1024, 1033, 1034, 1035

JOINT COMMISSION OF CONGRESS ON DISPOSITION OF USELESS PAPERS IN EXECUTIVE DEPARTMENTS.

By Mr. Vilas 1048

O

53D CONGRESS, 3d Session. } SENATE. { REPORT 760, Part 1.

ALCOHOL IN THE ARTS.

GREAT BRITAIN:

CUSTOMS AND INLAND REVENUE LAWS

AND

LAWS AND REGULATIONS FOR THE USE OF METHYLATED AND UNMETHYLATED ALCOHOL IN THE ARTS;

TOGETHER WITH

AN APPENDIX

CONTAINING DATA HERETOFORE PUBLISHED ON THE SAME SUBJECT IN SENATE REPORT No. 2332, FIFTIETH CONGRESS, FIRST SESSION.

JANUARY 12, 1895.—Reported by Mr. VOORHEES from the Finance Committee and ordered to be printed.

WASHINGTON:
GOVERNMENT PRINTING OFFICE.
1895.

COMMITTEE ON FINANCE, UNITED STATES SENATE,
January 12, 1895.

In October, 1894, the committee made an official request of the Department of State for its aid to secure as complete data as possible of the European laws and regulations governing the use of alcohol in the arts free of tax. In compliance with this request, the State Department on the 12th of that month issued instructions to its consular and diplomatic officers in Europe. Responses have been received transmitting such laws and regulations for the following countries:

Great Britain.	The Netherlands.	Denmark.
France.	Belgium.	Greece.
Germany.	Spain.	Switzerland.
Italy.	Sweden.	Portugal.
Austria-Hungary.	Norway.	

And I am directed by the committee to submit the above-mentioned laws and regulations and ask that they be printed for the use and information of the Senate, in connection with propositions for the repeal or modification of the following provision of the act of August 28, 1894, entitled "An act to reduce taxation, to provide revenue for the Government, and for other purposes."

* * * * * * *

SEC. 61. Any manufacturer finding it necessary to use alcohol in the arts, or in any medicinal or other like compound, may use the same under regulations to be prescribed by the Secretary of the Treasury, and on satisfying the collector of internal revenue for the district wherein he resides or carries on business that he has complied with such regulations and has used such alcohol therein, and exhibiting and delivering up the stamps which show that a tax has been paid thereon, shall be entitled to receive from the Treasury of the United States a rebate or repayment of the tax so paid.

* * * * * * *

ALCOHOL IN THE ARTS.

EMBASSY OF THE UNITED STATES,
London, October 30, 1894.

SIR: Referring to your instruction No. 522 of the 12th instant, requesting information concerning the laws and regulations of the government of Great Britain regulating the use of methylated and unmethylated alcohol in the arts, I have the honor to inclose a copy of the Customs Tariff of the United Kingdom, a copy of an extract from the General Code of Warehousing Instructions, and a letter from the assistant secretary of customs inclosing same; also copies of spirits act of 1880 (43 and 44 Vict., ch. 24), sections 116 to 132; revenue act of 1889 (52 and 53 Vict., ch. 42), sections 26, and "customs and inland revenue act of 1890" (53 Vict., ch. 8), sections 31 to 35, all bearing on the above subject. In addition I would observe that alcohol methylated or unmethylated is in all cases charged with duty on importation into the United Kingdom.

I have, etc.,

JAMES R. ROOSEVELT.

Hon. WALTER Q. GRESHAM,
Secretary of State.

CUSTOM-HOUSE, LONDON, *27th October, 1894.*

SIR: With reference to the application made by you on the occasion of your call at this office on the 24th instant, I am directed by the board of customs to transmit to you the inclosed copy of the Customs Tariff of the United Kingdom, and to state that alcohol unmethylated is in all cases charged with duty on importation into the United Kingdom. Methylated spirits on importation are also chargeable with duty, but spirits of specified descriptions are allowed to be delivered free of duty after being methylated in this country. As regards the law bearing on this subject, I am to refer you to the act 43 and 44 Vict., ch. 24, sections 116 and 132; 52 and 53 Vict., ch. 42, section 26, and 53 Vict., ch. 8, sections 31–35.

I am at the same time to transmit to you the accompanying extract from the General Code of Warehousing Instructions as regards the regulations in force in this country relating to methylating.

I am, sir, your obedient servant,

JOHN COURROUX.

DAVID D. WELLS, Esq.,
United States Embassy, 123 Victoria Street, SW.

[EXTRACT from General Code of Warehousing Instructions.]

METHYLATING.

Kinds of spirit, and conditions of methylation.

420. Plain British spirits of a strength not less than 50 over proof; unsweetened foreign spirits, of a like strength; and rum, or imitation rum, of a strength not less than 20 over proof may be methylated, by an authorised methylator, in a warehouse, or compartment therein, specially approved, by being mixed with wood naphtha or methylic alcohol, under the following regulations.

Place for methylating.

Conditions continued.

421. Notice must be given to the proper officer by the person intending to methylate spirits, specifying the particulars of the cask, or casks; and, on receipt of such notice, or warrant, showing—in the case of foreign unsweetened spirits, rum, or imitation rum—that the difference between the foreign and British duty, and the warehouse charges, have been paid, the officer may allow the spirits to be removed under bond to the approved warehouse. In cases, however, where it is specified, in the notice to methylate, that the whole of the spirits are intended for exportation only (see par. 434) the warehouse charges need not be paid.

Payment of differential duty and charges.

Spirits, how to be procured.

422. No drawback is to be paid on spirits used in methylation by a rectifier or other person. All such spirits must be procured from either a distillery warehouse, or a general warehouse, under the usual regulations.

Quantity of British spirits.

423. If the spirits proposed to be methylated, are British, the quantity taken for such purpose, at any one time, must not be less than 450 gallons.

Foreign spirits.

424. If foreign unsweetened spirits, rum, or imitation rum, be taken, the quantity must be the entire quantity contained in any cask, being an original cask in which no artificial ullage has been created, at the time of removal to the approved warehouse.

Officer's account.

425. The spirits are to be gauged, and the strength tried and approved, prior to the operation; any deficiency, not exceeding the authorised allowance for waste in warehouse, satisfactorily accounted for, may be written off.

Naphtha.

Approval of sample.

426. The wood naphtha or methylic alcohol for mixing with the spirit must be supplied by the methylators themselves, subject to a sample being submitted to, and approved by, the proper officer at the Laboratory, Somerset House, London. It may be miscible, or immiscible, with water, but must be of a strength not less than 60 over proof.

Naphtha vat.

427. The naphtha must be placed in a secure, close-covered vat, capable of containing 100 gallons. The hatches and cocks of the vat must be provided with suitable fastenings for securing them with revenue locks, to the satisfaction of the supervisor or surveyor.

Sample of naphtha for testing.

If disapproved.

428. When deposited in the vat, two samples must be drawn by the officer; one being forwarded for inspection and approval, as directed above, the other other being retained. If the sample is disapproved, the naphtha must be at once removed from the warehouse.

429. The naphtha must be added to the spirit in the proportion of one-ninth part of the bulk of such spirit. Proportions for mixing.

430. When necessary, a mixing vat must be provided of sufficient capacity to admit of the spirit and naphtha being thoroughly mixed. Mixing vat.

431. An officer must attend with the supervisor, or surveyor, and will be held equally responsible with him for seeing that the whole of the spirits is thoroughly mixed with the required proportion of naphtha. Attendance of officers.

432. The surveyor, or supervisor, after seeing that the mixing vat, when one is used is empty is to require that the naphtha be placed therein first, and the spirit added to it. Neither he nor the officer is to leave the mixing room, or lose sight of the spirits after the account has been taken until the whole has been mixed. All empty casks must be subjected to the provisions of pars. 289 to 295. (See par. 298 in relation to remnants). Mode of mixing. Officers to be present.

433. Both officers who attend a mixing of spirits are to sign the certificate that the spirits have been methylated and the certificate of receipt form is to be used for this purpose; the necessary alterations being made in writing. The certificate must state that the spirit has been mixed with the required proportion of naphtha. Certificate of methylating.

434. Within 48 hours from the completion of the operation, the methylated spirit must, with the exception noted below, be removed to the approved store of a rectifier, or licensed maker of methylated spirits; a despatch containing full particulars of marks, numbers, quantity, and strength, being forwarded without delay to the excise officer in charge of the store; a permit marked with the time of delivery being also given to accompany the goods. Spirits methylated in warehouse may not be delivered in vessels containing less than 5 bulk gallons; and each such vessel must be distinctly labelled with the words "Methylated Spirits." When methylated in a customs warehouse, and intended for exportation, such spirits may be stored in a compartment of such warehouse, specially approved for the purpose. Removal of methylated spirit.

435. The export examining officer, who ships methylated spirit, will, after certifying to the shipment on the permit, return the permit—in the case of spirits sent from the inland revenue to the supervisor of the district whence received, and in the case of spirits from a customs warehouse, to the officer at such warehouse. Disposal of permits.

CUSTOMS TARIFF OF THE UNITED KINGDOM.

Return showing the several articles subject to import duties in the United Kingdom, and the rate of duty levied upon each article, according to the tariff in operation upon the 1st day of September, 1894.

Articles.	Rates of duty.		
	£.	s.	d.
Cocoa ..... per pound..	0	0	1
Husks and shells ..... per cwt..	0	2	0
Cocoa or chocolate, ground, prepared, or in any way manufactured, per pound	0	0	2
Coffee ..... per cwt..	0	14	0
Kiln-dried, roasted, or ground ..... per pound..	0	0	2

Articles subject to import duties in the United Kingdom, etc.—Continued.

Articles.	Rates of duty. £	s.	d.
Chicory:			
Raw or kiln-dried ..... per cwt..	0	13	3
Roasted or ground ..... per pound..	0	0	2
Chicory (or other vegetable substances) and coffee, roasted and ground, mixed ..... per pound..	0	0	2
Fruit, dried:			
Currants ..... per cwt..	0	2	0
Figs and fig cake, plums, prunes, and raisins ..... do....	0	7	0
Tea ..... per pound..	0	0	4
Tobacco, manufactured, viz:			
Segars ..... do....	0	5	0
Cavendish or negrohead ..... do....	0	4	6
Cavendish or negrohead, manufactured in bond ..... do....	0	4	0
Other manufactured tobacco ..... do....	0	4	0
Snuff containing more than 13 pounds of moisture in every 100 pounds weight thereof ..... per pound..	0	3	9
Snuff not containing more than 13 pounds of moisture in every 100 pounds weight thereof ..... per pound..	0	4	6
Tobacco, unmanufactured, viz:			
Containing 10 pounds or more of moisture in every 100 pounds weight thereof ..... per pound..	0	3	2
Containing less than 10 pounds of moisture in every 100 pounds weight thereof ..... per pound..	0	3	6
Wine:			
Not exceeding 30° of proof spirit ..... per gallon..	0	1	0
Exceeding 30° but not exceeding 42° of proof spirit ..... do....	0	2	6
And for every degree or part of a degree beyond the highest above charged an additional duty ..... per gallon..	0	0	3
The word "degree" does not include fractions of the next higher degree.			
Wine includes lees of wine.			
Sparkling wine imported in bottles ..... per gallon..	0	2	0
The duties on sparkling wines are in addition to the duties in respect to alcoholic strength.			
Beer of the descriptions called mum, spruce, or black beer, and Berlin white beer, and other preparations, whether fermented or not fermented, of a character similar to mum, spruce, or black beer, where the worts thereof were, before fermentation, of a specific gravity—			
Not exceeding 1,215° ..... for every 36 gallons..	1	8	0
Exceeding 1,215° ..... do....	1	12	10
Beer of any other description where the worts thereof were, before fermentation, of a specific gravity of—			
1,055° ..... for every 36 gallons..	0	7	0
And so on in proportion for any difference in gravity.			
Spirits, or strong waters:			
For every gallon computed at hydrometer proof of spirits of any description (except perfumed spirits), including naphtha or methylic alcohol, purified so as to be potable; and mixtures and preparations containing spirits ..... per proof gallon..	0	10	10 and 6d. additional.
For every gallon of perfumed spirits ..... per gallon..	0	17	4 and 9d. additional.
Liqueurs, cordials, or other preparations containing spirits in bottle, entered in such a manner as to indicate that the strength is not to be tested ..... per gallon..	0	14	8 and 8d. additional.
And so in proportion for any less quantity.			
Chloroform ..... per pound..	0	3	8
Chloral hydrate ..... do....	0	1	4
Collodion ..... per gallon..	1	6	3
Confectionery, in the manufacture of which spirit has been used (such duty to be in addition to any other existing duty to which such confectionery is at present liable) ..... per pound..	0	0	0½
Ether, acetic ..... do....	0	1	11
Ether, butyric ..... per gallon..	0	16	5
Ether, sulphuric ..... do....	1	7	5
Ethyl, iodide of ..... do....	0	14	3
And so in proportion for any less quantity.			
Soap, transparent, in the manufacture of which spirit has been used ..... per pound..	0	0	3
Cards, playing ..... per doz. packs..	0	3	9

CUSTOMS DRAWBACKS.

Articles.	Rates of drawback.		
	£	s.	d.
Coffee: On roasted coffee exported as ships' stores—			
A drawback equal in amount to the import duty on raw coffee, viz, per cwt	0	14	0
Tobacco:			
Upon every pound of tobacco containing 14 per cent of moisture manufactured in Great Britain and Ireland upon which the duties of customs shall have been paid, on the same being by any licensed manufacturer exported as merchandise or deposited in any bonded warehouse to be used as ships' stores, and packed in whole and complete cases, each containing not less than 80 pounds net weight	0	3	3
And in proportion if the moisture exceeds or is less than 14 per cent.			
Snuff:			
Upon every pound manufactured in Great Britain and Ireland on the exportation thereof or on deposit in the Queen's warehouse to be abandoned, provided the quantity of inorganic matter contained therein does not exceed the proportion of 18 pounds in every 100 pounds, exclusive of water	0	3	3
If the snuff contains more than such proportion of inorganic matter, a deduction is to be made from the drawback in respect of every pound of the excess above such proportion.			
Foreign beer:			
For every 36 gallons of an original gravity of 1055°	0	6	9
And so on in proportion for any difference of gravity.			

SPIRITS ACT, 1880.

[43 and 44 Vict. Ch. 24.]

Arrangement of Sections.

A.D. 1880.

Preliminary.

Section.

1. Short title.
2. Commencement.
3. Definitions.
4. Division into Parts.

Part I.

Spirits other than Methylated Spirits.

General.

5. Prohibition of distilling, &c. without licence.
6. Liabilities of person having wash and a still.
7. As to capacity, &c. of still in England.
8. Condition for grant of licence for still of less than 400 gallons.

Distiller's Premises.

9. Distillery to be within quarter of a mile of market town, except on terms as to lodgings for officers.
10. Distillery not to be within quarter of a mile of rectifier's premises.
11. Premises of distiller not to be connected with premises of brewer, &c.
12. Power to refuse licence to brewer, &c.

Distiller's Spirit Store and Utensils.

13. Provision and securing of spirit store.
14. Scheduled rules with respect to vessels, &c. in distillery.
15. Alterations of vessels, utensils, and pipes.
16. Power of Commissioners to allow use of additional or substituted vessels, &c.
17. Penalty for interference with or attempt to defeat gauging.
18. Penalty for frauds and offences in relation to fittings.

Distiller's Entry.

19. Time and mode of making entry.
20. Continuance of entry.

Materials for Distillation.

21. Materials for brewing and distillation.
22. Distiller to use only wort made in his distillery.
23. Use of sugar.

Brewing and Distilling.

24. Unlawful hours for brewing and distilling.
25. Brewing and distilling periods.
26. Notice in the case of a distiller commencing or recommencing business.
27. Notice in the ordinary course of business to be given before each brewing.
28. Declaration as to wort.
29. Penalty for excess of wort or wash beyond that specified in declaration.
30. Penalty for excess of wort or wash on comparison of accounts.
31. Yeast not to be added except in backs.
32. As to use of yeast.
33. As to making bub or other fermenting composition.
34. Refilling backs during brewing period.
35. Declaration at end of brewing period.
36. Penalty where original gravity exceeds gravity as declared.
37. Mode of ascertaining gravity of wort or wash.
38. As to mode of distilling.
39. Return at end of distilling period.
40. Power to test by distillation.
41. Low wines or spirits not to be mixed so as to increase gravity.

Samples.

42. Power for officer to take samples.

Spirits in Store.

43. As to distiller's spirit store.
44. Account of stock and penalty for excess or deficiency.
45. Spirits may be removed from a store for exportation or ship's stores.

Charging and Payment of Duty.

46. Regulations for charging duty.
47. Return as to payment of duty.
48. Power to distrain for duties in arrear.

Warehousing.

49. Distiller's warehouse.
50. Excise warehouse.
51. Accommodation for officer to be provided.
52. Liability for spirits warehoused.
53. Revocation of approval of warehouse.
54. Crown warehouse.
55. Liability for spirits in Crown warehouse.
56. Warehousing in distiller's warehouse.
57. Constructive warehousing by distiller.
58. Regulations as to warehousing by distiller.
59. Warehousing re-imported spirits.
60. Stowage of casks in warehouse.
61. Inspection of spirits in warehouse.
62. Transfer to purchaser in distiller's warehouse.
63. Transfer to purchaser in Excise warehouse.
64. Vatting, blending, or racking in warehouse.
65. Racking duty-paid spirits.
66. Allowance upon deficiency in vatting, blending, or racking.
67. Reducing spirits in warehouse.
68. Bottling spirits in warehouse.
69. Sweetening and colouring in warehouse.
70. Fortifying.
71. Hours of removal from warehouse.
72. Removal from one warehouse to another.
73. Constructive deposit on removal.
74. Restriction on removal of British liqueurs and certain other spirits.
75. Delivery from warehouse for home consumption.
76. Regulation for charging duty on spirits warehoused.
77. In case of deficiency in spirits in a warehouse, duty on quantity warehoused to be paid.
78. Mode of calculating quantity of spirits warehoused.
79. Payment of duty on delivery of spirits from Customs warehouse.
80. Application of warehousing provisions to foreign spirits in an Excise warehouse.
81. Removal from warehouse for exportation.
82. Removal from warehouse for ship's stores.
83. Removal from warehouse for methylation.
84. Offences with respect to warehousing.
85. Application of Customs Acts to British spirits in a Customs warehouse.

Rectifiers.

86. Application to rectifiers of certain provisions relating to distillers.
87. Rectifier's premises not to be within a quarter of a mile of a distillery.

88. Rectifier's premises not to be connected with the premises of a brewer, &c.
89. Restrictions on business of rectifier.
90. Receipt of spirits by rectifier.
91. Scheduled rules with respect to rectifiers.
92. Penalty for mixing wine or wash with spirits.
93. Quality and quantity of spirits allowed to be removed from stock of rectifier.
94. Account of stock, and penalty for excess or deficiency.
95. Power for rectifier to warehouse on drawback.

Dealers and Retailers.

96. Application to dealers and retailers of certain provisions relating to distillers.
97. Dealers and retailers to make entry.
98. Marking casks.
99. Marking strength of certain spirits.
100. Restriction on grant of dealer's licence to distiller.
101. Situation of dealer's and retailer's premises.
102. Restrictions on sale by dealers and retailers.
103. Penalty for excess in stock of dealer or retailer.
104. Meaning of sale by retail.

Permits, Certificates, and Stock Books.

105. Spirits required to be accompanied by permit or certificate.
106. Mode of obtaining permit.
107. Penalties for removal of spirits without permit. and fraudulent use of permit.
108. Certificate book.
109. Penalties in case of removal of spirits without certificate.
110. Fraudulent use of certificate.
111. Cancelling and delivery of permits and certificates.
112. Stock book.
113. Offences with respect to certificate books and stock books.

Miscellaneous.

114. Rules for ascertaining quantity of spirits by weighing.
115. Remission of duty for spirits lost or destroyed.

PART II.

METHYLATED SPIRITS.

116. Part I. not to apply to methylated spirits.
117. Exemption of methylated spirits from duty.
118. Persons authorized to methylate.
119. Persons authorized to supply methylated spirits.
120. Authority to use methylated spirits.
121. Persons to whom methylated spirits may be supplied by authorized methylator.

122. Place of methylation.
123. Materials for and mode of methylation.
124. Supply and receipt of methylated spirits.
125. Stock account.
126. Rules to be observed by retailers of methylated spirits.
127. Powers of entry, inspection, and sampling.
128. Unlawful supply of methylated spirits.
129. Unlawful possession of methylated spirits.
130. Preparation, sale, or use of methylated spirits as or for a beverage or medicine.
131. Offences with respect to methylated spirits mixed with gum resin.
132. Power to revoke licence, &c.

PART III.

SUPPLEMENTAL.

Purified Methylic Alcohol.

133. Purified methylic alcohol to be deemed low wines.

Sykes's Hydrometer.

134. Strength of spirits to be ascertained by Sykes's hydrometer.

Scales, Weights, Measures, Locks, and Fastenings.

135. Excise traders to provide scales, weights, and measures.
136. Locks and fastenings.

Powers of Officers.

137. Power of entry and examination by officers.
138. Supply of ladders and lights.
139. Power to search for pipes, &c.
140. Power to enter and search for illicit stills and spirits.
141. Power to enter premises of dealer or retailer and examine and take samples.
142. Distillers, &c. to assist in taking account.
143. Power to require water to be drawn off from worm tub.

General Offences.

144. Unlawful removal of malt, wort, or wash.
145. Arrest of and penalties on persons unlawfully removing spirits.
146. Unlawful hawking and sale of spirits.
147. Sale of spirits for unlawful purposes.
148. Unlawful purchase of spirits.
149. Penalty for possession of spirits on which duty has not been paid.

150. Forcibly opposing execution of Act.
151. Misconduct of and collusion with officers.
152. Obstruction of officers.
153. Neglect of duty by officer of the peace.
154. Provisions as to forfeiture.

Informers.

155. Discharge and reward of informers.

Procedure.

156. Recovery of fines.

Forms and Schedules.

157. Forms of notices and documents.
158. Application of previous Acts to permits, &c. under this Act.
159. Regulations to be prescribed.
160. Effect of Schedules.
161. Construction of Acts, &c. referring to repealed enactments.

Savings and Repeal.

162. Saving with respect to premises entered on 5th April 1825.
163. Saving for articles in use before 28th August 1860.
164. Repeal of Acts in Schedule.

SCHEDULES.

FIRST SCHEDULE.

Rules as to Vessels and Utensils.

Part I.—Vessels to be erected before making entry by a distiller.
Part II.—Maximum number of vessels in distillery.
Part III.—Construction, &c. of vessels in distillery.
Part IV.—Construction, &c. of still.
Part V.—Spirit receivers.
Part VI.—Pipes, cocks, and valves.
Part VII.—Dipping holes.
Part VIII.—Provision and situation of articles required or allowed.
Part IX.—Casks.
Part X.—Marking utensils and rooms.
Part XI.—Course of wash, low wines, feints, and spirits.

SECOND SCHEDULE.

Table A.—Ascertaining gravity.
Table B.—Ascertaining weight.

THIRD SCHEDULE.

Rules with respect to rectifiers.

FOURTH SCHEDULE.

Particulars to be specified in request note for permit.
Particulars to be specified in certificate.
Particulars to be entered in stock book.

FIFTH SCHEDULE.

Enactments repealed.

CHAPTER 24.—AN ACT to consolidate and amend the Law relating to the Manufacture and Sale of Spirits. [26th August 1880.] A. D. 1880

Be it enacted by the Queen's most Excellent Majesty, by and with the advice and consent of the Lords Spiritual and Temporal, and Commons, in this present Parliament assembled, and by the authority of the same, as follows:

Preliminary.

1. This Act may be cited as the Spirits Act, 1880. Short title.

2. This Act shall come into operation on the first day of January one thousand eight hundred and eighty-one, which date is in this Act referred to as the commencement of this Act. Commencement.

3. In this Act each of the following terms shall have the meaning assigned to it by this section, unless it is otherwise expressly provided, or there is something in the subject or context inconsistent with such meaning,— Definitions.

"Spirits" means spirits of any description, and includes all liquors mixed with spirits, and all mixtures, compounds, or preparations, made with spirits:

"Low wines" means spirits of the first extraction conveyed into a low wines receiver:

"Feints" means spirits conveyed into a feints receiver:

"British spirits" means spirits liable to a duty of Excise:

"Plain spirits" means any British spirits, (except low wines and feints,) which have not had any flavour communicated thereto or ingredient or material mixed therewith:

"Spirits of wine" means rectified spirits of the strength of not less than forty-three degrees above proof:

"British compounds" means spirits redistilled or which have had any flavour communicated thereto, or ingredient or material mixed therewith:

"Foreign spirits" means all spirits and strong waters liable to a duty of Customs:

"Sugar" includes any saccharine substance or syrup manufactured from any material from which sugar can be manufactured:

"Commissioners" means the Commissioners of Inland Revenue:

"Methylate" means to mix spirits with some substance in such manner as to render the mixture unfit for use as a beverage, and "methylated spirits" means spirits so mixed to the satisfaction of the Commissioners:

"Proof" means the strength of proof as ascertained by Sykes's hydrometer:

"Still" includes any part of a still, and any distilling apparatus whatever for distilling or making spirits:

"Distiller," "rectifier," "dealer," and "retailer," mean respectively a person who distils, rectifies, or compounds, deals in, or retails spirits:

"Excise trader" means any person carrying on a business subject to any of the regulations of this Act, and includes a malster who makes malt duty-free for distillation and any proprietor or occupier of an excise warehouse:

"Licence" means a licence granted by the Commissioners or by an officer duly authorised by them; and "licensed," as applied to an Excise trader, means a person holding a licence so granted for the purpose of his business:

"Premises," when used with reference to an Excise trader, means any building or place used by him in the course of his business, and of which entry is required to be made:

"Prescribed" and "approved" mean respectively prescribed or approved by the Commissioners:

"Warehouse" means any warehouse approved or provided for the deposit of spirits:

"Distiller's warehouse" means an approved warehouse on the premises of a distiller:

"Excise warehouse" means a warehouse approved or provided by the Commissioners as a general warehouse for the deposit of spirits:

"Customs warehouse" means a warehouse approved or provided by the Commissioners of Customs for the deposit of spirits:

"Collector" means the collector of Inland Revenue, and in connexion with the business of an Excise trader means the collector for the collection in which the premises of the trader are situate, and includes a person acting as such collector:

"Officer" means officer of Inland Revenue:

"Proper officer" means the officer of the division or ride in which the business of an Excise trader is carried on, or in which anything is by this Act required to be done by, or any notice to be given to, such officer, and includes a person acting as such officer, and also any officer superior in matters of Excise to such officer:

"Writing" includes print, and "written" includes printed:

"Justice" means a justice of the peace or a magistrate having jurisdiction for the county or place where any offence is committed or suspected to have been committed, or any offender is apprehended or found, or any goods or commodities are seized or liable to seizure or suspected to be so liable:

"County or place" includes a city, county of a city, county of a town, borough, liberty, division, franchise, or other place of magisterial jurisdiction:

"Schedule" means schedule to this Act.

4. This Act is divided into Parts, as follows:
Part I.—Spirits other than Methylated Spirits.
Part II.—Methylated Spirits.
Part III.—Supplemental.

Division into Parts.

PART I.

SPIRITS OTHER THAN METHYLATED SPIRITS.

General.

Prohibition of distilling, &c. without licence.

5. (1.) No person may, without being licensed to do so, or on any premises to which his licence does not extend—
(*a.*) Have or use a still for distilling, rectifying, or compounding spirits; or
(*b.*) Brew or make wort or wash, or distil low wines, feints, or spirits; or
(*c.*) Rectify or compound spirits.

(2.) If any person contravenes this section he shall for each offence incur a fine of five hundred pounds, and all spirits, and vessels, utensils, and materials for distilling or preparing spirits in his possession shall be forfeited.

Liabilities of person having wash and a still.

6. Every person who makes or keeps wash prepared or fit for distillation, or low wines or feints, and has in his possession or use a still, shall, as respects the duties, penalties, and forfeitures imposed by law on distillers, be deemed to be a distiller.

As to capacity, &c. of still in England.

7. (1.) In England if a distiller keeps or uses a still of which the body, without the head, is of less capacity than three thousand gallons he must not keep or use in his distillery at the same time more than two wash stills and two low wine stills.

(2.) For every still kept or used in contravention of this section the distiller shall incur a fine of one hundred pounds, and a further fine of one hundred pounds for every time that any such still is used; and every still kept or used in contravention of this section shall be forfeited.

Condition for grant of licence for still of less than 400 gallons.

8. (1.) A person shall not have a licence to keep a still of less capacity than four hundred gallons, unless he has in use a still of that capacity, or produces to the Commissioners a certificate, signed by three justices for the county or place, that he is a person of good character, and fit and proper to be licensed to keep such a still, and that the premises in which he proposes to erect the still and of which he is in actual possession, are of the yearly value of ten pounds at least.

(2.) If the still is intended to be kept by persons in partnership, a certificate to the above effect with regard to one of the partners shall be sufficient.

(3.) The Commissioners may, if they think fit, refuse to grant the licence, notwithstanding the production of the

justices' certificate; but, in case of refusal, they shall state the grounds thereof, in writing signed by them, to the justices.

Distiller's Premises.

Distillery to be within quarter of a mile of market town, except on terms as to lodgings for officers.

9. (1.) A person shall not be entitled to a licence for, or be permitted to make entry of, a distillery, unless it is situate in or within a quarter of a mile of a market town.

(2.) The Commissioners may, if they think fit, grant a licence for, and permit entry to be made of, a distillery situate beyond these limits, on the terms of the distiller providing to their satisfaction lodgings for the officers to be placed in charge of the distillery.

(3.) The lodgings must be conveniently situate and must not form part of the distillery or of the distiller's dwelling-house, and the rent charged for them, unfurnished, must not exceed fifteen pounds a year.

(4.) If a distiller to whom a licence is granted on these terms fails to provide the lodgings, or to keep them in repair, or interrupts or annoys any officer residing therein in his use or enjoyment thereof, the Commissioners may suspend or revoke his licence.

Distillery not to be within quarter of a mile of rectifier's premises.

10. (1.) No person may make entry of or use for brewing or making wort, or wash, or for distilling spirits, or for receiving or keeping spirits as a distiller, any premises within a quarter of a mile of any premises entered or used for rectifying or compounding spirits, or for receiving or keeping spirits by a rectifier.

(2.) If any person contravenes this section he shall incur a fine of five hundred pounds for every week during which the premises are so entered or used.

Premises of distiller not to be connected with premises of brewer, &c.

11. (1.) A distiller may not carry on upon his premises the business of a brewer of beer, or a maker of sweets, vinegar, cider, or perry, of a refiner of sugar, or of a dealer in or retailer of wine.

(2.) No person may carry on the business of a distiller upon premises communicating otherwise than by an open public street or carriage road with any premises used by a brewer of beer, or a maker of sweets, vinegar, cider, or perry, or a refiner of sugar, or a dealer in or retailer of spirits or a dealer in or retailer of wine.

(3.) If any person contravenes any of the foreging provisions of this section he shall incur a fine of two hundred pounds.

(4.) The Commissioners may refuse to grant a licence for distilling spirits in any premises in which, from their situation with respect to premises used for rectifying or compounding spirits, or to a brewery or vinegar manufactory, they think it inexpedient to allow the distilling of spirits.

Power to refuse licence to brewer, &c.

(12.) The Commissioners may refuse to grant a licence to brew beer, or to make vinegar, on any premises in which from their situation with respect to a distillery, they think it inexpedient to allow the brewing of beer or making of vinegar to be carried on.

Distiller's Spirit Store and Utensils.

Provision and securing of spirit store.

13. (1.) Every distiller must, to the satisfaction of the Commissioners, provide a spirit store and cause it to be properly secured.

(2.) The spirit store must be kept locked by the officer in charge of the distillery at all times except when he is in attendance.

(3.) If a distiller fails to provide or secure a spirit store as by this section required, the Commissioners may, until it is so provided and secured, refuse to grant him a licence, or suspend or revoke his licence.

Scheduled rules with respect to vessels, &c., in distillery.

14. (1.) Every distiller must observe the rules contained in the First Schedule.

(2.) For any contravention of the rules in the First Schedule penalties shall be incurred as follows:

(*a.*) If there is found in a distillery any vessel in excess of the number permitted by the rules in the second part of the First Schedule, the vessel, with its contents, shall be forfeited, and the distiller shall incur a fine of two hundred pounds.

(*b.*) For any contravention of the rules contained in the third part of the First Schedule the distiller shall incur a fine of two hundred pounds, and an additional fine of twenty pounds for every day during which the contravention continues.

(*c.*) For any contravention of the rules contained in the fourth, seventh, or eighth part of the First Schedule the distiller shall incur a fine of two hundred pounds.

(*d*). For any contravention of the rules contained in the fifth, sixth, or tenth part of the First Schedule, the distiller shall incur a fine of fifty pounds.

(*e.*) Every cask not marked as required by the rules contained in the ninth part of the First Schedule shall, with its contents, be forfeited.

(*f.*) For any contravention of the rules contained in the eleventh part of the First Schedule, the wash, low wines, feints, or spirits in respect of which the rules are contravened shall be forforfeited, and the distiller shall incur a fine of two hundred pounds, or, at the election of the Commissioners, of twenty shillings for every gallon of such wash, low wines, feints, or spirits.

Alterations of vessels, utensils, and pipes.

15. (1.) A distiller may, on giving to the proper officer two days previous notice in writing of his intention, specifying the vessel, utensil, or pipe intended to be altered, moved, or added, alter or move any entered vessel, utensil, or pipe, or add a new vessel, utensil, or pipe.

(2.) Every such new vessel, utensil, or pipe must be duly entered.

(3.) If a distiller, without giving such notice, alters, moves, or adds to the vessels, utensils, or pipes on his premises after entry has been made thereof, or the capacity thereof has been ascertained by the proper officer, he shall for each offence incur a fine of two hundred pounds.

Power of Commissioners to allow use of additional or substituted vessels, &c.

16. The Commissioners may permit any distiller to fix and use, subject to such regulations as they prescribe, any vessel, utensil, or fitting, in addition to or instead of any of those required by this Act, and may from time to time withdraw any such permission. This Act shall apply to any such additional or substituted vessel, utensil, or fitting as if its use were permitted or required by this Act.

Penalty for interference with or attempt to defeat gauging.

17. If on the premises of any distiller any attempt is made or device used to prevent or hinder an officer from ascertaining the gravity, quantity, or strength of the wort, wash, low wines, feints, or spirits in any vessel, or whilst running, or to deceive him in taking the dip or gauge of any vessel or utensil, the distiller shall for each offence incur a fine of two hundred pounds.

Penalty for frauds and offences in relation to fittings.

18. If a distiller—

(*a.*) Places, affixes, or makes any cock, plug, pipe, or opening in, on, to, into, or from any vessel or utensil in contravention of this Act; or

(*b.*) Causes or procures any cover, fastening, cock, plug, pump, or pipe to be so made or used that any vessel or utensil may be employed, opened, removed, filled, or emptied in the absence of an officer, or as in any manner to avoid or defeat the security intended to be provided by this Act,

he shall for each offence incur a fine of five hundred pounds.

Distiller's Entry.

Time and mode of making entry.

19. (1.) Every distiller must, before he begins to brew any wort, make entry of the vessels, utensils, fittings, and places intended to be used by him, by signing and sending or delivering to the proper officer an account in the prescribed form, setting forth with the prescribed particulars—

(*a.*) His name and abode, and the situation of the premises intended to be entered; and

(*b.*) A true and particular description of every vessel and utensil intended to be used on those premises for the purpose of his business; and

(*c.*) Either—

(i.) The number of gallons which every still, with its head, is capable of containing; or

(ii.) The number of gallons of wash per hour which every still is capable of distilling; and

(*d.*) The purpose for which each such vessel and utensil is intended to be used; and

(*e.*) Every house, room, and place in which any part of his business is to be carried on, or any spirits are to be kept; and

(*f.*) The purpose for which each such house, room, or place is to be used.

(2.) In the account every vessel, utensil, house, room, and place must be distinguished by the name and number painted thereon.

(3.) No vessel, utensil, house, room, or place must be described in the account as intended to be used for more than one purpose.

(4.) There must be delivered with the account a drawing, model, or description distinctly showing the course, construction, and use of all fixed pipes to be used, and of every branch thereof and cock thereon, and every place, vessel, or utensil with which any such pipe communicates.

(5.) If a distiller makes entry of any vessel, utensil, house, room, or place as intended to be used for more than one purpose, he shall for each offence incur a fine of two hundred pounds.

(6.) If any vessel, utensil, fitting, house, room, or place used by a distiller, for any purpose connected with his business,—

(*a.*) is not specified in the account required to be delivered on making entry; or

(*b.*) is not numbered as so specified; or

(*c.*) is in any other place, or used or applied for any other purpose, than as so specified; or

(*d.*) does not in all respects correspond with the representation thereof as so specified;

the distiller shall, for each offence, incur a fine of five hundred pounds, and every such vessel or utensil, with its contents, and all spirits or materials for distilling spirits found in any such place, shall be forfeited.

Continuance of entry.

20. An entry must not be withdrawn whilst there remains in any place mentioned therein, any still, or in any place, vessel, or utensil mentioned therein, any materials preparing or fit for distillation, or any spirits liable to duty.

Materials for Distillation.

Materials for brewing and distillation.

21. A distiller may use in the brewing or making of wort or wash any material of such nature that the gravity of the wort or wash produced therefrom can be ascertained by the prescribed saccharometer.

Distiller to use only wort made in his distillery.

22. (1.) A distiller must not distil spirits except from wort or wash brewed or made in his distillery.

(2.) If a distiller has in his possession any wort, wash, low wines, feints, or fermented liquor not brewed, made, or distilled in his distillery, he shall forfeit the same, and also incur a fine of two hundred pounds.

Use of sugar.

23. (1.) A distiller must not, without the consent of the Commissioners, remove any sugar from the place entered as a sugar store, except for use in the manufacture of spirits.

(2.) Not less than four hours before removing any sugar for this purpose, he must give the officer in charge of the distillery written notice, specifying the time of the intended removal, and the quantity to be removed.

(3.) At the time so specified, the distiller must convey the specified sugar immediately from the sugar store to the mash tun or other entered vessel, to be there immediately used in the manufacture of spirits.

(4.) He must forthwith deposit again in the sugar store all sugar so removed and not so used.

(5.) If a distiller contravenes this section he shall for each offence incur a fine of fifty pounds.

Brewing and Distilling.

Unlawful hours for brewing and distilling.

24. A distiller must not mash any materials, or brew, or make wort or wash, or use a still, between eleven o'clock in the afternoon of Saturday and one o'clock in the forenoon of Monday.

If a distiller contravenes this section he shall incur a fine of fifty pounds.

Brewing and distilling periods

25. (1.) The period of brewing or making wort or wash (in this Act called the brewing period), and the period of distilling spirits (in this Act called the distilling period), must, in every distillery, be alternate and distinct.

(2.) The brewing period extends from the commencement of any process of wetting, brewing, or mashing any materials until all the wort or wash in the distillery has been collected in the fermenting backs and wash chargers, and the declaration required by this Act of such collection has been given.

(3.) The distilling period extends from the commencement of the distillation of any wash until all the wash, low wines, and feints in the distillery, or in the possession of the distiller, (except the feints produced by the last re-distillation,) have been distilled into spirits and conveyed into the spirits receiver, and each furnace door, or the steam pipe of each still, has been secured by the officer in charge of the distillery.

(4.) Except as by this Act provided, a distiller must not use any still before the expiration of two hours after the end of the brewing period.

(5.) Except as by this Act provided, a distiller must not mash any materials or brew or make any wort or wash during the distilling period.

(6.) A distiller may, immediately after all the wash in his possession has been removed into a wash charger, begin to brew wort, but only on condition that all the wash so removed be forthwith distilled, and that every still be worked off and secured within the following times; (that is to say,) in the case of a low wines still, within thirty-two hours from the time when the wash was removed into the wash charger, and in the case of any other still within sixteen hours from that time.

(7.) If a distiller contravenes this section he shall for each offence incur a fine of five hundred pounds.

Notice in the case of a distiller commencing or recommencing business.

26. (1) Every distiller must, at least six days before beginning to brew wort, or, if he has discontinued brewing wort for more than one month, before recommencing to brew wort, give the proper officer a written notice, specifying the day on which he intends so to brew or recommence brewing.

(2.) If a distiller contravenes this section, or if any wort or wash is found in the distillery or possession of a distiller before the notice required by this section is given, or before the day specified in the notice given by him, or if there is found in his possession any wort or wash which he may not lawfully have in his possession, he shall for each offence incur a fine of two hundred pounds, and forfeit all wort or wash so found.

27 A distiller must, at least four hours before he mashes any materials or brews for making wort, give the officer in charge of the distillery written notice specifying the day and hour when the mashing or brewing is to be commenced.

Notice in the ordinary course of business to be given before each brewing.

If a distiller mashes or brews without giving such notice, he shall incur a fine of fifty pounds.

28. (1.) All wort must be collected into the fermenting back within eight hours after it has begun to run into the back.

Declaration as to wort.

(2.) Immediately after the wort is so collected the distiller must deliver to the officer in charge of the distillery a written declaration specifying—

(*a.*) The number of the back in which the wort is contained; and

(*b.*) The gravity or (if yeast has been added) the original gravity of the wort; and

(*c.*) The quantity thereof as measured by the number of dry inches, that is to say, by the number of inches between the dipping place of the back and the surface of the wort contained therein.

(3.) If a distiller makes default in complying with the provisions of this section, or if the declaration delivered by him contains any untrue statement, he shall for each offence incur a fine of two hundred pounds.

29. If after the declaration has been delivered the gravity of the wort shall be found to exceed the gravity therein specified or the quantity of the wort or wash shall be found to exceed by five per centum the quantity of wort therein specified, the distiller shall incur a fine of two hundred pounds.

Penalty for excess of wort or wash beyond that specified in declaration.

30. If after an officer has taken an account of the gravity or quantity of the wort or wash in a fermenting back any wort or wash is found in the back which exceeds in gravity, or exceeds by five per centum in quantity, the wort or wash of which the account has been taken, the following consequences shall ensue:

Penalty for excess of wort or wash on comparison of accounts.

(*a.*) All wort or wash found in the back shall be considered as new, and as not included in any former charge against the distiller; and

(*b.*) The distiller shall be charged with duty in respect of the whole thereof as not being before charged; and

(*c.*) The wort or wash of which account had previously been taken shall be deemed to be distilled or decreased, and the distiller shall be charged for a quantity of spirits in respect thereof as for wort or wash actually distilled or decreased; and

(*d.*) The distiller shall incur a fine of two hundred pounds.

31. A distiller must not add yeast or other matter capable of causing fermentation to wort or wash in any vessel except a fermenting back.

Yeast not to be added except in backs.

If a distiller contravenes this section he shall incur a fine of two hundred pounds.

32. (1.) A distiller may, subject as in this section mentioned, either remove yeast from the wort or wash in a fer-

As to use of yeast.

menting back, or leave the yeast and sediment in a back, and remove the wort or wash to an empty back.

(2.) The quantity of yeast removed from or the quantity of yeast and sediment left in any one back must not exceed eight per centum of the wort or wash in the back.

(3.) If yeast is removed from and yeast and sediment left in the same back, the total quantity of yeast removed and yeast and sediment left must not exceed the same proportion.

(4.) Four hours before removing any wort or wash the distiller must give the officer in charge of the distillery written notice specifying the backs from which and to which the wort or wash is to be removed.

(5.) No wort or wash may be removed from a back until an account thereof has been taken by the officer.

(6.) In calculating duty no abatement shall be made on account of any yeast removed from or yeast and sediment left in any back.

(7.) A distiller may manufacture in his distillery into a solid substance any yeast removed from, or any yeast and sediment left in a back under this section, and may send out of his distillery or add to the wort or wash in any back therein, any such yeast or sediment, whether so manufactured or not.

As to making bub or other fermenting composition.

33. (1.) A distiller must, at least four hours before beginning to make bub or any other composition for promoting the fermentation of wort or wash, give the officer in charge of the distillery written notice, specifying the time when and the vessel in which the composition is to be made, the fermenting back into which it is to be put, and the quantity to be put into such back.

(2.) The quantity of the composition must not exceed five per centum of the wort or wash to which it is added.

(3.) The gravity of the composition must not exceed sixty degrees, and must not be increased after the officer has taken an account thereof.

(4.) The whole of the composition must be conveyed into the back specified in the notice within twenty-four hours after the time therein specified for making the composition.

(5.) If a distiller contravenes any provision of this section he shall, for each offence, incur a fine of two hundred pounds.

Refilling backs during brewing period.

34. (1.) When fermentation has ceased in a fermenting back a distiller may, during the brewing period, on giving the notice required by this Act before the removal of wash, remove the whole of the wash from the back to the wash charger, and refill the back with fresh wort.

(2.) The wash so removed must be secured in the wash charger until the commencement of the distilling period.

Declaration at end of brewing period.

35. (1.) When the whole of the wort or wash made in a distillery during one brewing period is collected into the fermenting backs or into the fermenting backs and wash charger, the distiller must give the officer in charge of the distillery a written declaration to that effect.

(2.) If the declaration is untrue in any particular, or any still in the distillery is used before the expiration of two hours after the delivery thereof, the distiller shall incur a fine of two hundred pounds.

36. If the original gravity of any wort or wash as ascertained from any sample of wash taken from a fermenting back or wash charger exceeds by more than two degrees the gravity thereof as declared by the distiller, he shall incur a fine of two hundred pounds, and a further fine of sixpence for every gallon of wash contained in the vessel from which the sample was taken. Penalty where original gravity exceeds gravity as declared.

37. (1.) The gravity of wort or wash shall be ascertained by the prescribed saccharometer, and in calculating the same a degree of gravity shall be taken as equal to one thousandth part of the gravity of distilled water at sixty degrees Fahrenheit. Mode of ascertaining gravity of wort or wash.

(2.) To ascertain the original gravity of the wort from which wash is made, a definite quantity by measure of the wash must be distilled, and the distillate and spent wash each made up with distilled water to the original measure of the wash before distillation.

(3.) The specific gravity of each must then be ascertained.

(4.) The number of degrees and parts of a degree by which the specific gravity of the distillate is less than the specific gravity of distilled water shall be deemed the spirit indication of the distillate.

(5.) The specific gravity of the spent wash added to the degree of original gravity which in Table A. in the Second Schedule is set opposite the degree of spirit indication shall be deemed the original gravity of the wort.

(6.) All weighings and measurings for any of the above purposes must be made when the liquid is at sixty degrees Fahrenheit.

(7.) The distiller or any person acting on his behalf may, if the distiller so desires, be present at any such process for ascertaining original gravity.

38. (1.) Four hours before any wash is removed from a fermenting back, the distiller must give the officer in charge of the distillery written notice specifying the number of the back, and the day and hour of the intended removal. As to mode of distilling.

(2.) At the time so specified the officer shall attend, and after he has locked the discharge cock of the wash charger, and removed the fastenings which prevent the passage of the wash from the back to the charger, but not before, the whole of the wash, or, if the charger is not capable of containing the whole, then one half at least, must be removed from the back to the charger.

(3.) When the wash has been so removed and the fastenings have been secured, the officer may take an account of the quantity and the gravity of the wash.

(4.) After account has been so taken of the contents of a wash charger, no wash may be removed from a back into the same charger before the whole of the contents of that charger have been removed into the still or intermediate charger.

(5.) The produce of all or any of the backs filled in the same brewing period may be collected in the receivers for such produce.

(6.) Subject to the provisions of this section as to feints remaining from a previous distillation, all produce so col-

lected must, throughout the whole course of its distillation, and until the removal to the spirit store of the spirits produced therefrom, be kept unmixed with any other matter, and separate from all other produce.

(7.) Any feints produced by and remaining from a previous distillation may be mixed with the low wines or feints produced by a subsequent distillation, and the process of re-distilling feints may be repeated as often as the distiller thinks fit.

(8.) Not less than four hours before the removal of any low wines, feints, or spirits from a receiver, the distiller must give the officer in charge of the distillery written notice specifying the day and hour of the intended removal.

(9.) At the time so specified the officer shall attend, and after he has taken an account of the contents of the receiver, and removed the fastenings of its pump or discharge cock, but not before, the whole contents of the receiver must be forthwith removed therefrom, and conveyed, if low wines or feints, into the proper charger, but if spirits, into a vat or cask in the spirit store.

(10.) After the fastenings have been so removed, no other low wines, feints, or spirits may be conveyed into the receiver until the whole of its contents have been removed therefrom and the fastenings again secured.

(11.) If a distiller contravenes any of the foreging provisions of this section he shall, for each offence, incur a fine of two hundred pounds.

(12.) Where a distiller has secured his low wines and feints pumps to the satisfaction of the Commissioners he may run low wines and feints together into the same receiver, and may at any time without notice remove low wines and feints from a receiver to a charger and re-distil them.

(13.) Where a still is connected with two spirit receivers the distiller may collect in each receiver alternately the spirits produced from any distillation or re-distillation, and when he has run into either receiver as much spirits as he thinks fit, he shall give notice to the officer, who shall thereupon lock the charging cock. No spirits may be removed from any such receiver until the expiration of two hours from such notice, nor except after the notice of removal required by this section.

Return at end of distilling period.

39. At the end of every distilling period the distiller, or the principal manager of the distillery, must sign and deliver to the proper officer a return in the prescribed form specifying, with respect to the brewing and distilling period—

(*a.*) The quantity of each description of material used in making wort or wash during the period; and,

(*b.*) The quantity of wort or wash decreased or distilled during the period; and,

(*c.*) The quantity of spirits computed at proof produced during the period; and,

(*d.*) The quantity of feints remaining at the end of the period.

If default is made in making the return required by this

section, or if the return is untrue in any particular, the distiller shall incur a fine of two hundred pounds.

Power to test by distillation.

40. (1.) For the purpose of testing the quantity of spirits at proof in any wash by distillation, the proper officer may require any charger or receiver in a distillery to be emptied and cleaned, and any quantity of the wash to be distilled, and the produce to be conveyed into the charger or receiver. For this purpose all persons in the employ of the distiller must, on request and on reasonable notice, provide the officer with assistance and fuel.

(2.) All low wines, feints, and spirits so distilled and conveyed into a charger or receiver must be kept therein unmixed with any other thing until the officer has taken an account of the quantity and strength thereof.

(3.) If a distiller contravenes any of the foregoing provisions of this section, he shall incur a fine of two hundred pounds.

(4.) If the quantity of proof spirits produced from the wash exceeds the proportion of one gallon and a quarter for every hundred gallons of wash in respect of every five degrees of attention, that is to say, in respect of every five degrees of difference between the highest gravity of the wort from which the wash was produced as declared by the distiller or as found by the officer, and the lowest gravity of the wash as taken by the officer, the distiller shall incur a fine of two hundred pounds, and, in addition, of sixpence for every gallon of wash from which the wash so distilled was taken.

Low wines or spirits not to be mixed so as to increase gravity.

41. (1.) There must not be mixed with or added to any low wines, feints, or spirits in a distillery any substance which either increases the gravity thereof, or prevents the true strength thereof from being ascertained by Sykes's hydrometer.

(2.) If this section is contravened, the distiller shall, for each offence, incur a fine of two hundred pounds, and all low wines, feints, spirits, and mixtures with respect to which the offence is committed shall be forfeited.

Samples.

Power for officer to take samples.

42. (1.) An officer may take a sample of any wort, wash, low wines, feints, or spirits from any vessel or utensil in a distillery, and the gravity or strength of any sample so taken shall be deemed the gravity or strength of the whole contents of the vessel or utensil from which it is taken.

(2.) A distiller may, if he wishes, before any such sample is taken, stir up and mix together all the liquor contained in the vessel or utensil from which the sample is to be taken.

Spirits in Store.

As to distiller's spirit store.

43. (1.) No spirits may be brought into a distiller's spirit store unless they have been distilled in his distillery, and conveyed directly from the spirit receiver into the store.

(2.) No spirits which have been removed from the store may be brought back into the store.

(3.) The officer in charge of the store must, when required, attend at the store between five o'clock in the forenoon and eight o'clock in the afternoon on every day, except Sunday.

(4.) All spirits in the store must be filled into casks, in the presence of the officer, in the prescribed manner.

(5.) Spirits may not be removed from the store at any less strength than twenty per centum below proof, nor at any strength above twenty-five and under forty-three per centum over proof.

(6.) Spirits may not be removed from the store in any quantity less than nine gallons.

(7.) The casks in which spirits are removed may be either full or, subject to the prescribed regulations, on ullage.

(8.) All the spirits distilled in one distilling period (except a quantity not exceeding one hundred and fifty gallons, and in one ullage cask) must be removed from the store within ten days from the termination of that period, and before any spirits distilled in a succeeding period are brought into the store.

(9.) When all the spirits distilled in one distilling period have been removed from the spirit store, or at the end of ten days from the termination of that period, whichever first happens, the proper officer shall strike a balance in the account kept by him for the distillery.

(10.) If any spirits are brought into or found in or removed from a distiller's spirit store in contravention of this section the distiller shall, for each offence, incur a fine of two hundred pounds, and the spirits in respect of which the offence is committed shall be forfeited.

(11.) If any spirits are found in a distiller's spirit store after the time at which they are required by this section to be removed therefrom, the distiller shall incur a fine of twenty shillings for every gallon of spirits so found.

(12.) Every distiller must, to the satisfaction of the Commissioners, provide accommodation at his spirit store for the officer in charge thereof, and, in default of doing so, shall incur a fine of fifty pounds.

Account of stock and penalty for excess or deficiency.

44. (1.) The proper officer shall from time to time take an account in the prescribed manner of the quantity of spirits in a distiller's spirit store.

(2.) If the quantity of spirits computed at proof found in the store is greater or less than the quantity which, according to the account so taken, ought to be therein, the distiller shall incur a fine of twenty shillings for every gallon of spirits so in excess or deficient, and the spirits (if any) in excess shall be forfeited.

(3.) But a distiller shall not be liable to any penalty under this section if the excess does not exceed one half per centum, or the deficiency three per centum on the balance struck when the account was last taken, together with the quantity since brought in from the spirit receiver, nor if he satisfies the Commissioners that the deficiency does not result from fraud.

(4.) Where there is an excess, and the distiller is not prosecuted in respect thereof, he shall pay duty on the excess.

45. Subject to the prescribed regulations and the prescribed security, spirits may be removed from a distiller's spirit store for exportation or for ship's stores without payment of duty. Spirits may be removed from a store for exportation or ship's stores.

Charging and Payment of Duty.

46. (1.) The duty on spirits made in a distillery is to be charged in respect of the wort or wash, the low wines, and the feints and spirits made in the distillery, and shall be payable according to such of those modes of charge as produces the greatest amount of duty. Regulations for charging duty.

(2.) In respect of every one hundred gallons of wort or wash the duty is to be charged for a quantity of spirits at the rate of one gallon of spirits at proof for every five degrees of attenuation, that is to say, for every five degrees of difference between the highest gravity of the wort as declared by the distiller or found by the officer (whichever is the greater) without any allowance for waste, bub, dregs, yeast, or other matter, and the lowest gravity of the wash as found by the officer before distillation.

(3.) In respect of low wines the duty is to be charged on the quantity of spirits at proof contained therein, less five per centum.

(4.) In respect of feints and spirits the duty is to be charged on the quantity of spirits at proof after deducting the feints (if any) remaining from a previous distillation and included in the account of feints and spirits last produced.

(5.) In calculating the duty payable on spirits an allowance shall be made for any deficiency occasioned by natural waste, subject to the following provisions—

(*a.*) The allowance shall not exceed one and a half per centum on the spirits removed from the receiver to the store.

(*b.*) If the deficiency exceeds three per centum on the spirits so removed no allowance whatever shall be made.

47. (1.) The proper officer shall from time to time make out in the prescribed manner and for the prescribed period a return of the quantity of spirits for which a distiller is chargeable, and of the duty payable thereon, and shall, if required in writing by the distiller, deliver to him, or leave at his distillery, a copy of this return, signed by the officer. Return as to payment of duty.

(2.) If a distiller does not, within the prescribed time and in the prescribed manner, pay the duty with which he is charged in the return, he shall incur a fine of twenty pounds, and forfeit double the duty payable by him.

48. (1.) If any duty payable by a distiller remains unpaid after the time within which it is payable, the collector may, by warrant signed by him, empower any person to distrain all spirits, malt, or other materials for distilling spirits, vessels, and utensils belonging to the distiller or in any premises in the use or possession of the distiller, or of any person on his behalf or in trust for him, and also all spirits warehoused in the name of the distiller, and to sell the Power to distrain for duties in arrear

same by public auction, giving six days previous notice of the sale.

(2.) The proceeds of sale shall be applied in or towards payment of the costs and expenses of the distress and sale, and in or towards payment of the duties due from the distiller, or in respect of any spirits so warehoused and distrained and sold, and the surplus, if any, shall be paid to the distiller.

(3.) But in the event of any spirits or malt being so distrained the distiller may, at any time before the day appointed for the sale thereof, remove under permit the whole or any part thereof on paying to the collector, in or towards payment of the duty, the true value of the spirits or malt.

(4.) Permits for such removal shall on application be granted as if the distress had not been made.

Warehousing.

Distiller's warehouse.

49. (1.) A distiller may provide a warehouse on his premises for warehousing spirits distilled on the same premises without payment of duty.

(2.) Every such warehouse must be approved by the Commissioners and entered by the distiller.

Excise warehouse.

50. (1.) The Commissioners may approve Excise warehouses for warehousing spirits without payment of duty. Such warehouses shall be for the general accommodation of persons desiring to warehouse spirits.

(2.) The proprietor or occupier of an Excise warehouse must give the prescribed security.

Accommodation for officer to be provided.

51. In the case of a distiller's warehouse or of an Excise warehouse, the distiller or the proprietor or occupier must, to the satisfaction of the Commissioners, provide accommodation at the warehouse for the officer in charge thereof, and in default of doing so shall incur a fine of fifty pounds.

Liability for spirits warehoused.

52. (1.) The proprietor or occupier of a warehouse shall be alone responsible to the proprietor of any spirits warehoused therein for the safe custody of the spirits.

(2.) No action shall be brought against the Commissioners or any of their officers for loss or damage occasioned to spirits whilst warehoused in such warehouse, or on account of any wrong or improper delivery of spirits therefrom.

Revocation of approval of warehouse.

53. The Commissioners may revoke their approval of a warehouse, and upon such revocation all spirits warehoused therein must be removed as the Commissioners direct, and no abatement of duty or allowance shall be made in respect of any such spirits for deficiency of quantity or strength after notice of the revocation has been given to the proprietor or occupier of the warehouse.

Crown warehouse.

54. The Commissioners may, if they think fit, themselves provide Excise warehouses, and may charge for spirits warehoused therein warehouse rent at the prescribed rate, not exceeding one penny per week for forty gallons. This rent must be paid by the proprietor of the spirits to the collector, and shall be a lien on all spirits warehoused in the same warehouse belonging to such proprietor.

55. If any spirits warehoused in an Excise warehouse provided by the Commissioners are destroyed by fire or by the falling of the warehouse or of any part thereof, no claim for compensation shall be brought against Her Majesty or the Commissioners or any of their officers in respect of the spirits destroyed, but no duty shall be payable in respect thereof. Liability for spirits in Crown warehouse.

56. (1.) A distiller may, subject and according to the provisions of this Act and to the prescribed regulations, and the prescribed security, warehouse, without payment of duty, in the distiller's warehouse any spirits distilled on his premises. Warehousing in distiller's warehouse.

(2.) The spirits may be warehoused in casks or in vats.

(3.) The spirits must not be of any strength other than that allowed on removal from the spirit store.

57. Where a distiller has given the prescribed security under which he may remove spirits from one warehouse to another, he may, subject to the provisions of this Act and to the prescribed regulations, remove any spirits directly from his store to an Excise or Customs warehouse, and all spirits so removed shall be deemed to have been first warehoused in the distiller's warehouse and removed therefrom under the provisions of this Act. Constructive warehousing by distiller.

58. (1.) The casks in which spirits are warehoused by a distiller may be either full or on ullage, but each cask must contain not less than nine gallons, and on the outside of each end thereof there must be legibly cut, branded, or painted with oil colours the mark, number, capacity, and contents of the cask and the year in which it is warehoused. All the casks warehoused in a distiller's warehouse or from the same distillery in any one year must be continuously numbered, beginning with number one for the cask first warehoused in such year. Regulations as to warehousing by distiller.

(2.) A distiller must, not less than twenty-four hours before removing spirits from his store to his distiller's warehouse or an Excise warehouse, give the officer in charge of the store, and also the officer in charge of the warehouse, written notice of the day and hour when he intends to begin the removal.

(3.) He must, by the same notice, or by a further written notice given to each of these officers not less than one hour before the removal, specify the mark, number, and capacity of each cask which he intends to warehouse, and the number of gallons and the strength of the spirits contained in each cask.

(4.) All spirits removed at the same time from the store to warehouse must be of the same strength, and within one per centum of the strength specified in the notice.

(5.) The removal of spirits must not take place except on the day specified in the notice, nor except between the hours of eight o'clock in the forenoon and three o'clock in the afternoon.

(6.) The officer in charge of the warehouse shall give to the distiller a certificate in the prescribed form in relation to the spirits warehoused, and the certificate shall forthwith be delivered over to the officer in charge of the distillery.

(7.) In the case of spirits warehoused in a Customs warehouse the authorized officer of Customs at the warehouse shall give to the distiller a receipt in the prescribed form for the spirits, and the receipt shall be forthwith delivered over to the officer in charge of the distillery, who shall give to the distiller a copy thereof signed by him.

(8.) The officer in charge of the distillery, after the delivery of any such certificate or receipt, shall deduct from the number of gallons of spirits for which the distiller is chargeable with duty the number of gallons of spirits warehoused computed at proof.

(9.) If a distiller or any other person produces a receipt, purporting to express that spirits have been warehoused in a Customs warehouse, which receipt is untrue in any particular, he shall incur a fine of two hundred pounds.

Warehousing re-imported spirits.

59. The proprietor of any plain spirits re-imported into the United Kingdom may, on the issue by the Commissioners of Customs of a bill of store for the spirits, and on the repayment of the allowance granted on the exportation thereof, warehouse the spirits in an Excise or Customs warehouse.

Stowage of casks in warehouse.

60. All casks warehoused must be arranged and stowed in such manner that access can be easily had to each cask.

If a distiller or the proprietor or occupier of a warehouse fails to cause the casks therein to be so arranged and stowed he shall incur a fine of five pounds.

Inspection of spirits in warehouse.

61. (1.) The proprietor of spirits warehoused may, in the presence of the officer in charge of the warehouse, view and examine the spirits, and show them for sale, and examine the state of the casks, and prevent leakage and drainage therefrom.

(2.) The officer shall, on request, attend at all reasonable times for this purpose, but not more than once in twenty-four hours.

Transfer to purchaser in distiller's warehouse.

62. Spirits in a distiller's warehouse may, on the prescribed security being given by the distiller, be transferred to a purchaser, but no further transfer may be made of them whilst remaining in the same warehouse.

Transfer to purchaser in Excise warehouse.

63. British spirits warehoused in an Excise warehouse in the name of a distiller or dealer may be transferred into the name of a purchaser on his producing to the officer in charge of the warehouse a written order for the delivery thereof, signed by the proprietor of the spirits, and countersigned by the proprietor or occupier of the warehouse or his servant acting for him at the warehouse. Spirits so transferred shall be discharged from all claim in respect of duties, penalties, or forfeitures to which the transferor is liable, but may not be delivered out of the warehouse for home consumption until payment of the duties chargeable thereon.

Vatting, blending, or racking in warehouse.

64. (1.) The proprietor of spirits warehoused in a distiller's or Excise warehouse may, in accordance with the prescribed regulations, vat, blend, or rack them in the warehouse, either on payment of duty or otherwise.

(2.) Every cask containing racked or blended spirits must be marked in the prescribed manner.

(3.) If the proprietor of any racked or blended spirits in a warehouse fails to have the cask containing the spirits marked as by this section required, and to keep them so marked, he shall incur a fine of fifty pounds.

Racking duty-paid spirits.

65. (1.) The Commissioners may require a distiller or a proprietor or occupier of an Excise warehouse to provide a separate room, secured to their satisfaction, for racking spirits on which duty has been paid.

(2.) The officer in charge of the warehouse shall keep an account of all spirits computed at proof belonging to a proprietor of spirits which shall be received into the room and lawfully sent out therefrom.

(3.) If at any time a greater quantity of spirits is found in the room than ought, according to the account, to be there, the excess shall be charged with duty.

(4.) If the excess amounts to more than one per centum of the quantity of spirits brought in since the last preceding account, it shall be forfeited; and the proprietor of the spirits shall incur a fine of twenty shillings for every gallon of the excess.

Allowance upon deficiency in vatting, blending, or racking.

66. (1.) In any warehouse the duty shall be paid on any deficiency exceeding the amount which can be accounted for by natural waste or other legitimate cause before racking, and also on any deficiency exceeding one per centum which occurs during the operation.

(2.) If, after duty has been paid on any spirits, a portion thereof is racked or drawn off from the cask, no further abatement or allowance for deficiency shall be made in respect thereof whilst they remain in warehouse.

Reducing spirits in warehouse.

67. (1.) A distiller may, in an Excise warehouse specially approved for the purpose, and in accordance with the prescribed regulations, reduce with water any plain spirits of a strength not less than forty-three per centum over proof to any strength at which spirits may be removed from a distiller's spirit store.

(2.) The water used for this purpose must be supplied only through a service pipe and meter constructed, laid down, and fixed to the satisfaction of the Commissioners.

(3.) An allowance not exceeding one per centum shall be made on any deficiency occurring during the reduction.

Bottling spirits in warehouse.

68. (1.) The proprietor of spirits warehoused in an Excise warehouse may bottle the spirits on giving the officer in charge of the warehouse twenty-four hours previous notice of his intention to do so.

(2.) He must provide and give the prescribed security, and the place in which the spirits are to be bottled must be approved by the Commissioners, must be adjacent to the warehouse, and must not be situate in the same court or yard, or have any communication with the premises of a rectifier, dealer, or retailer.

(3.) If the spirits are for home consumption they must be drawn off into imperial or reputed quart or pint bottles, and packed in cases containing one dozen quart bottles or two dozen pint bottles each, or any number of dozens.

(4.) Each case must be fastened, secured, and marked in the prescribed manner in the bottling place.

(5.) Subject as aforesaid, spirits must be bottled, packed, and removed in accordance with the prescribed regulations.

(6.) If at any time there is found in the quantity of spirits belonging to the proprietor a deficiency since the last account was taken exceeding by two per centum in the quantity removed by him into the bottling place, he shall be charged with duty on such deficiency.

(7.) Spirits so bottled may not be removed for home consumption,—

(*a.*) by a distiller, unless he is also licensed as a dealer, in a quantity less than five dozen imperial or reputed quart bottles, or ten dozen imperial or reputed pint bottles;

(*b.*) by any person in a quantity less than one dozen imperial or reputed quart bottles, or two dozen imperial or reputed pint bottles.

Sweetening and colouring in warehouse.

69. A distiller or a rectifier may, in accordance with the prescribed regulations, and on giving to the proper officer, or the authorized officer of Customs, one day's notice, add any sweetening or colouring matter, or any other ingredient, to any spirits warehoused by him in an Excise or Customs warehouse.

Fortifying.

70. Any spirits warehoused in an Excise or Customs warehouse, except British compounds, may be used in the warehouse for fortifying wines, or for any other purpose for which foreign spirits may be used under the Acts relating to the Customs.

Hours of removal from warehouse.

71. Spirits may not be removed from a distiller's warehouse before six in the forenoon or after six in the afternoon, nor from any Excise warehouse before eight in the forenoon or after four in the afternoon.

Removal from one warehouse to another.

72. Subject to the provisions of this Act, spirits warehoused may, in accordance with the prescribed regulations, and on the prescribed security being given, and at the risk of the proprietor thereof, be removed to any other warehouse except a distiller's warehouse.

Constructive deposit on removal.

73. Where spirits are to be warehoused in an Excise warehouse upon removal from another warehouse, the proprietor of the spirits may, on their arrival at, but before their actual deposit in, the warehouse, make an entry thereof, or of some portion thereof not being less than one cask, for removal for home consumption, or to another warehouse, or for exportation, or ship's stores, and thereupon the spirits of which entry is so made shall be considered as if they had been actually deposited, and may be delivered and removed accordingly.

Restriction on removal of British liqueurs and certain other spirits.

74. Spirits to which any sweetening or colouring matter or any other ingredient has been added in warehouse, British liqueurs or tinctures or medicinal spirits, may not be delivered from a warehouse except for exportation or ship's stores, and must, when so delivered, be removed directly from the warehouse to the ship in which they are to be exported or used as stores.

Delivery from warehouse for home consumption.

75. (1.) Spirits may be delivered from a warehouse for home consumption after the full duty chargeable thereon has been paid.

(2.) The officer at the warehouse shall, on production to him of the receipt for the duty, allow the spirits to be removed.

(3.) The spirits must be conveyed to the place of destination and delivered there, without alteration or change, in the same casks or packages in which they left the warehouse.

Regulation for charging duty on spirits warehoused.

76. On the delivery for home consumption from any warehouse of a cak or package of British spirits warehoused therein without payment of duty, duty shall be charged and paid on the quantity of spirits contained in the cask or package at the time of delivery. But if the quantity at that time is less than the quantity originally warehoused, then, unless the Commissioners or the Commissioners of Customs, as the case may be, are satisfied that no part of the deficiency is caused by fraudulent abstraction, duty shall be charged and paid on the quantity so warehoused, or on such portion thereof as such Commissioners direct.

In case of deficiency in spirits in a warehouse, duty on quantity warehoused to be paid.

77. (1.) If at any time any deficiency beyond that which can be accounted for by natural waste or other legitimate cause is found in any cask or package of British spirits warehoused, the Commissioners or the Commissioners of Customs may require immediate payment of duty on the quantity of spirits originally warehoused in the cask or package.

(2.) If the person in whose name the spirits are warehoused refuses, on written demand by an officer, or an officer of Customs, to pay the duty, he shall forfeit double the amount thereof.

(3.) No spirits warehoused in his name shall be transferred or removed until the duty or forfeiture is paid.

Mode of calculating quantity of spirits warehoused.

78. The quantity of spirits contained in any vat, bottle, vessel, cask, or package warehoused may be calculated by weight, measure, or gauge, as the Commissioners or the Commissioners of Customs may direct.

Payment of duty on delivery of spirits from Customs warehouse.

79. Where British spirits are delivered from a Customs warehouse for home consumption, and in all cases where duty is payable on such spirits in such warehouse, the duty payable shall be collected according to the laws and regulations for like spirits in an Excise warehouse by the officers of Customs under the direction of the Commissioners of Customs and paid into the Bank of England to the account of the Receiver General of Inland Revenue, and dealt with as other duties of Excise.

Application of warehousing provisions to foreign spirits in an Excise warehouse.

80. Where foreign spirits are delivered from an Excise warehouse for home consumption, the duty payable thereon shall be collected by an officer under the direction of the Commissioners according to the laws and regulations for like spirits in a Customs warehouse, and paid into the Bank of England to the account of the Commissioners of Customs, and dealt with as other duties of Customs.

Removal from warehouse for exportation.

81. (1.) The proprietor of spirits in a distiller's or Excise warehouse may, on giving notice and the prescribed bond, remove the spirits for exportation without payment of duty

(2.) The notice must be delivered to the officer in charge of the warehouse not less than twenty-four hours before

the time when the proprietor intends to ship the spirits, and must specify the mark, number, and capacity of each cask or package intended to be shipped, the number of gallons and strength of the spirits contained in each such cask or package, the time and place of the intended shipment, and the name or description and destination of the ship.

(3.) The officer may place any prescribed mark on each cask or package intended for exportation.

(4.) The bond given by the proprietor must, subject to the prescribed regulations, be conditioned that the spirits specified in the notice given from time to time shall be conveyed to the quay where the ship is lying, shall be put on board the ship, and shall (the danger of the seas or enemies excepted) be exported to and landed at the port specified in the notice, without alteration or change, and shall not be landed at any other place.

(5.) The spirits must be sent to the quay where the ship is lying, and delivered with the permit to the custody of the authorized officer of Customs there, and must remain in his custody until shipped.

(6.) On shipment the officer of Customs shall certify on the back of the permit the date of the shipment, the name of the ship, and the quantity of spirits, computed at proof, shipped, and shall send the permit to the collector of the collection from which the spirits were sent.

Removal from warehouse for ship's stores.

82. Spirits warehoused may, on the prescribed bond being given, subject to the prescribed regulations and subject to the conditions, regulations, and restrictions required by any Act in force for the time being, be delivered out without payment of duty for ship's stores.

Removal from warehouse for methylation.

83. Spirits warehoused may, on the prescribed bond being given, subject to the prescribed regulations, be delivered out, without payment of duty, for methylation.

Offences with respect to warehousing.

84. If a distiller, or proprietor of spirits, or proprietor or occupier of an Excise warehouse, by himself or by any person in his employ or with his connivance, commits any of the following offences; (that is to say,)

(*a.*) Opens any of the locks or doors of a warehouse, or makes or obtains access into an Excise warehouse, except in the presence of an officer acting in his duty as such; or

(*b.*) After the approval of a warehouse, makes any alteration therein or addition thereto without the previous consent of the Commissioners; or

(*c.*) Warehouses spirits in, or removes spirits from, a warehouse otherwise than is provided by this Act; or

(*d.*) By any contrivance or device privately removes or conceals any spirits either before or after they are warehoused,

he shall incur a fine of two hundred pounds; and all spirits warehoused, removed, or concealed in contravention of this section shall be forfeited.

Application of Customs Acts to British spirits in a Customs warehouse.

85. All the powers, provisions, regulations, and penalties contained in or imposed by any Act relating to the Customs as to the warehousing, custody, and delivery out of

warehouse of goods liable to a duty of Customs, and as to any deficiencies therein or allowances thereon, shall, where applicable, be observed, applied, enforced, and put into execution with reference to British spirits warehoused in a Customs warehouse, so far as the same are not superseded by and are consistent with the provisions of this Act.

Rectifiers.

Application to rectifiers of certain provisions relating to distillers.

86. The rules contained in the fourth, sixth, seventh, eighth, ninth, and tenth parts of the First Schedule, with the corresponding penalties, and the provisions of this Act with respect to the following matters:—

(*a.*) Alterations of vessels, utensils, and pipes;
(*b.*) Powers of Commissioners to allow use of additional or substituted utensils and fittings;
(*c.*) Penalty for interference with and attempt to defeat gauging;
(*d.*) Penalties for frauds and offences in relation to vessels and utensils;
(*e.*) Making entry;
(*f.*) Unlawful hours for distilling;

shall apply to every rectifier as if he were a distiller.

Entry must be made by a rectifier before he begins to receive, rectify, or compound any spirits.

Rectifier's premises not to be within a quarter of a mile of a distillery.

87. (1.) No person may make entry of or use for rectifying or compounding spirits, or for receiving or keeping spirits as a rectifier, any premises within a quarter of a mile of any premises entered or used for brewing or making wort or wash, or for distilling spirits, or for receiving or keeping spirits by a distiller.

(2.) If any person contravenes this section he shall incur a fine of five hundred pounds for every week during which the premises are so entered or used.

Rectifier's premises not to be connected with the premises of a brewer, &c.

88. (1.) A rectifier keeping a still may not carry on upon his premises the business of a brewer of beer or a maker of sweets, vinegar, cider, or perry, or a refiner of sugar, or a dealer in or retailer of wine.

(2.) No person may carry on the business of a rectifier keeping a still upon premises communicating otherwise than by an open public street or carriage road with any premises used by a brewer of beer or a maker of sweets, vinegar, cider, or perry, or a refiner of sugar, or a dealer in or retailer of spirits or a dealer in or retailer of wine.

(3.) If any person contravenes any of the foregoing provisions of this section he shall incur a fine of two hundred pounds.

(4.) The Commissioners may refuse to grant a license for rectifying or compounding spirits on any premises in which from their situation with respect to a distillery they think it inexpedient to allow such business to be carried on.

Restrictions on business of rectifier.

89. (1.) A rectifier keeping a still must not have in his possession any wort, wash, fermented liquor, or materials capable of being distilled into low wines or spirits.

(2.) No rectifier whatever may—

(*a.*) Distil or extract low wines or spirits from any material except spirits; or

(*b.*) Have in his possession any spirits for which he has not received and delivered to the proper officer a permit or certificate; or

(*c.*) Have in his possession any foreign spirits, except for the purpose of being rectified or compounded by him as spirits of wine or as British compounds.

(3.) If a rectifier contravenes this section, he shall for each offence, in addition to any other penalty, incur a fine of five hundred pounds, or, at the election of the Commissioners, of twenty shillings for every gallon of wort, wash, fermented liquor, or other materials or of the low wines or spirits in respect of which the offence is committed.

(4.) If a rectifier is convicted more than once of an offence against this section, his licence shall become void, and he shall, during three years from the date of the conviction, be incapable of holding a licence as a rectifier.

Receipt of spirits by rectifier.

90. (1.) A rectifier must, on receipt of any spirits, give notice thereof to the proper officer, and deliver to him the permit or certificate received with the spirits.

(2.) Unless the officer neglects to attend within one hour after receiving the notice, the rectifier must not, until the officer has taken account of the spirits so received, break bulk or draw off any part of the spirits or add water or anything thereto, or in any respect alter the same, or tap, open, alter, or change any cask or package containing any such spirits.

(3.) If a rectifier contravenes this section he shall incur a fine of two hundred pounds and forfeit the spirits in respect of which the offence is committed.

Scheduled rules with respect to rectifiers.

91. (1.) With respect to the business of a rectifier the rules in the Third Schedule must be observed.

(2.) For any contravention of the rules in the first part of the Third Schedule the rectifier shall incur a fine of two hundred pounds.

(3.) For any contravention of the rules in the second part of the Third Schedule the rectifier shall incur a fine of one hundred pounds.

(4.) For any contravention of the rule in the fourth part of the Third Schedule the rectifier shall incur a fine of fifty pounds, and the spirits in respect of which the offence is committed shall be forfeited.

Penalty for mixing wine or wash with spirits.

92. An officer may take a sample of the contents of a still of a rectifier at any time before it has begun to work, or after it has ceased working, and if there is found in the still any wine or wash put into or mixed with low wines, feints, or spirits, the rectifier shall, in addition to any other penalty, incur a fine of five hundred pounds.

Quality and quantity of spirits allowed to be removed from stock of rectifier.

93. (1.) A rectifier must not send out any spirits except British compounds or spirits of wine, and must not send out any British compounds or spirits of wine in less quantity than two gallons.

(2.) If a rectifier contravenes this section, he shall, for each offence, incur a fine of fifty pounds; and all spirits sent out in contravention of this section, together with all

horses, cattle, carriages, and boats made use of in conveying the same, shall be forfeited.

Account of stock, and penalty for excess or deficiency.

94. (1.) An officer shall from time to time take an account in the prescribed manner of the quantity and strength of the spirits in the stock of a rectifier, making allowance for the spirits for which certificates have been granted since the last account.

(2.) If a still is at work when the account is taken, all spirits produced from the charge of the still must be kept apart from the remainder of the stock until the account has been completed.

(3.) If, on balancing the stock, any excess appears, a quantity of spirits, computed at proof, equal thereto shall be forfeited, and the rectifier shall incur a fine of twenty shillings for every gallon of such excess.

(4.) If, on balancing the stock, there is any deficiency not duly accounted for by spirits sent out with certificate, and exceeding five per centum on the balance struck when the account was last taken, together with the quantity since lawfully received, the rectifier shall incur a fine of twenty shillings for every gallon of such deficiency.

Power for rectifier to warehouse on drawback.

95. (1.) A rectifier may, subject to the provisions of this Act, and the prescribed regulations, warehouse in an Excise or Customs warehouse, for exportation or for ship's stores, or for home consumption, British compounds rectified or compounded by him from spirits on which duty has been paid, and not being British liqueurs or tinctures or medicinal spirits.

(2.) He may so warehouse for exportation or for ship's stores, but not for home consumption, British liqueurs, tinctures, or medicinal spirits compounded by him from spirits on which duty has been paid.

(3.) He may so warehouse, either for exportation or for ship's stores, but not for home consumption, spirits of wine rectified by him from spirits on which duty has been paid.

(4.) British compounds warehoused for home consumption must be of a strength not exceeding eleven degrees over proof.

(5.) British compounds and spirits of wine must be warehoused in casks either full or on ullage of one gallon or two gallons. All casks warehoused in any one year from the same premises must be numbered consecutively. The capacity of each cask must be not less than nine gallons, and there must be legibly cut, branded, or painted with oil colours on each end thereof—

(*a.*) The name and place of business of the rectifier:

(*b.*) The number of the cask and the year in which it is warehoused:

(*c.*) The capacity of the cask in gallons, and, if the capacity is less than eighty gallons, the quarter or quarters of a gallon of capacity above the number of entire gallons:

(*d.*) The number of gallons, strength, and denomination of the spirits contained in the cask.

(6.) The rectifier must, before warehousing spirits, deliver

to the officer in charge of the warehouse or the authorized officer of Customs a warehousing entry specifying—

(*a.*) The particulars of the spirits, as set forth in the certificate:

(*b.*) The name of the rectifier:

(*c.*) The place whence the spirits are sent:

(*d.*) In the case of British liqueurs, or tinctures, or medicinal spirits, the number of gallons at proof of the spirits from which the contents of each cask were compounded.

(7.) The strength of all spirits warehoused on drawback (except British liqueurs, or tinctures, or medicinal spirits) shall be deemed to be that ascertained by Sykes's hydrometer.

(8.) Where a cask contains British liqueurs, or tinctures, or medicinal spirits, the officer shall take a sample from the cask; and the sample shall be examined, under the direction of the Commissioners, or the Commissioners of Customs, by distillation or otherwise, and the strength as ascertained by the examination, less five degrees, shall, for the purposes of this Act, be deemed the true strength of the contents.

(9.) When the officer has examined the spirits, he shall deliver to the rectifier a receipt specifying—

(*a.*) The marks, numbers, and capacity of each cask warehoused; and

(*b.*) The number of gallons computed at proof, description, and strength of the spirits in each cask; and

(*c.*) The total number of gallons computed at proof received with the certificate.

(10.) The officer shall forthwith send to the collector of the collection in which the rectifier's premises are situate a certificate setting forth the name of the rectifier, the situation of his premises, and the other particulars required to be inserted in the receipt.

(11.) The collector shall, on receiving three days written notice of the time when payment is required, and on production of the receipt, pay to the rectifier, or to any person authorized by him, a drawback of the duties on the spirits warehoused.

(12.)Spirits warehoused for home consumption under this section may be delivered out for home consumption under the same rules and regulations and on payment of the same duty as spirits warehoused by a distiller.

(13.) Spirits warehoused for exportation or ship's stores under this section must not be delivered out otherwise than directly from the warehouse to the ship in which they are to be exported or used as stores.

Dealers and Retailers.

96. The first, second, and sixth rules contained in the seventh part of the First Schedule and the rules contained in the eighth part thereof, with the corresponding penalties, and the provisions of this Act with respect to the following matters—

(*a.*) Penalty for interference with or attempt to defeat gauging, and

(*b.*) Penalties for frauds and offences in relation to vessels and utensils,

shall apply to every dealer and retailer as if he were a distiller.

Application to dealers and retailers of certain provisions relating to distillers.

97. Every dealer and retailer must, in accordance with the prescribed regulations, make entry in writing, signed by him, of every building, room, place, fixed cask, vessel, and utensil intended to be used by him for keeping spirits, distinguishing each place or thing by a separate letter or number.

Dealers and retailers to make entry.

98. (1.) There must be legibly cut, branded, or painted with oil colour on some conspicuous part of every fixed cask or other vessel used by a dealer or retailer for holding spirits in stock, and on the outside of both the ends of every moveable cask used by him for keeping or delivering spirits, the number of gallons which the cask or vessel is capable of containing.

(2.) Every cask or vessel which does not bear the capacity thereof so cut, branded, or painted shall be forfeited with the contents, and the dealer or retailer shall incur a fine of fifty pounds.

Marking casks.

99. (1.) Where the strength of any spirits forming part of the stock of a dealer or retailer cannot be ascertained by Sykes's hydrometer, the dealer or retailer must, on being so required by an officer, cause the quantity and strength of the spirits to be legibly marked on the outside of the cask or vessel containing them.

(2.) Every cask or vessel which a dealer or retailer neglects or refuses, on being so required, to mark, or fails to keep so marked, or which is found to be untruly marked, shall be forfeited with the contents, and the dealer or retailer shall, for each offence, incur a fine of fifty pounds.

(3.) But a cask or vessel shall not be deemed to be untruly marked within the meaning of this section if the strength denoted by the mark corresponds with that expressed in the permit or certificate with which the spirits were received into stock, and no alteration has since been made in the spirits.

Marking strength of certain spirits.

100. (1.) A distiller shall not be licensed to carry on the business of a dealer upon any premises within two miles from his distillery unless those premises are first approved by the Commissioners.

(2.) If a distiller carries on the business of a dealer on any approved premises within two miles from his distillery, no spirits shall be removed from such premises unless accompanied by a permit, and if any spirits are removed without a permit he shall incur the same fine and forfeiture as if the removal had been from his spirit store.

Restriction on grant of dealer's licence to distiller.

Situation of dealer's and retailer's premises.

101. (1.) A dealer or retailer must not carry on his business upon any premises communicating otherwise than by an open public street or carriage road with any premises entered or used by a distiller, or a rectifier keeping a still.

(2.) A retailer must not be concerned or interested in the business of a distiller, or of a rectifier keeping a still, carried on upon any premises within two miles from the premises on which he is licensed to carry on the business of a retailer.

(3.) If a dealer or retailer contravenes this section he shall for each offence incur a fine of two hundred pounds.

Restrictions on sale by dealers and retailers.

102. (1.) A dealer must not, unless he has an additional licence authorizing him so to do, or is also licensed as a retailer, sell, send out, or deliver spirits in any less quantity than two gallons of the same denomination at a time for the same person.

(2.) A retailer must not, unless he is also licensed as a dealer, sell, send out, or deliver spirits to a rectifier, dealer, or retailer, or buy or receive spirits from another retailer, not being also licensed as a dealer.

(3.) A dealer or retailer must not receive, send out, or have in his possession any British spirits of any strength exceeding that at which a distiller may send out spirits of the like denomination.

(4.) If a dealer or retailer contravenes this section he shall for each offense incur a fine of fifty pounds, and in case of the spirits being of unlawful strength they shall be forfeited.

Penalty for excess in stock of dealer or retailer.

103. (1.) An officer may at any time take an account of the quantity of spirits in the stock or possession of a dealer or retailer.

(2.) If the quantity of spirits computed at proof found on taking the account exceeds the quantity which ought according to the stock book of the dealer or retailer to be in his possession, the excess shall be forfeited and the dealer or retailer shall incur a fine of twenty shillings for every gallon of the excess.

Meaning of sale by retail.

104. The sale of spirits in any quantity less than two gallons or less than one dozen reputed quart bottles shall be deemed sale by retail.

Permits, Certificates, and Stock Books.

Spirits required to be accompanied by permit or certificate.

105. (1.) No spirits may be sent out or delivered from a distiller's store unless accompanied by a permit.

(2.) No spirits may be removed from a distiller's or Excise warehouse unless accompanied by a permit.

(3.) No spirits may be removed from a Customs warehouse (the same not being under bond on removal from one such warehouse to another such warehouse) unless accompanied by a Customs certificate from an authorized officer of Customs.

(4.) No spirits may be sent out or delivered from the stock of a rectifier unless accompanied by a certificate.

(5.) No spirits may be sent out or delivered from the stock of a dealer unless accompanied by a certificate, except spirits not exceeding in quantity one gallon at a time sold

by him under an additional licence or a licence to retail to a person not being a dealer or retailer.

(6.) No spirits exceeding in quantity one gallon of the same denomination at a time for the same person may be sent out or delivered from the stock of a retailer unless accompanied by a certificate.

(7.) Except as in this section is provided, no spirits exceeding the quantity of one gallon of the same denomination at a time for the same person may be sent out, delivered, or removed from any one place to any other place unless accompanied by a permit.

(8.) All spirits found to have been sent out, delivered, or removed, or in course of being sent out, delivered, or removed in contravention of this section, together with all horses, cattle, carriages, and boats made use of in conveying the same, shall be forfeited, and every person in whose possession the same are found shall incur a fine of one hundred pounds, or at the election of the Commissioners or the Commissioners of Customs a fine equal to treble the value of the spirits.

(9.) If any question arises as to the accuracy of the description of spirits in a permit or certificate, the proof that the spirits correspond to the description shall lie on the owner or claimant of the spirits, who shall prove the same by the oaths of two credible witnesses, being skilful and experienced persons competent to decide by examination thereof.

Mode of obtaining permit.

106. (1.) A permit shall be granted by the proper officer upon a request note signed by a distiller or other person requiring a permit and delivered to the officer.

(2.) The request note must contain the particulars specified in that behalf in the Fourth Schedule.

(3.) The permit must contain all the particulars specified in the request note, and shall be in force for such limited time only as may be mentioned in the permit.

(4.) A permit shall not be granted to a distiller for any less quantity of spirits than nine gallons contained in one cask, or if the spirits are bottled, for any quantity less than five dozen imperial or reputed quart bottles or ten dozen imperial or reputed pint bottles.

(5.) A permit shall not be granted for the removal of spirits from the stock of a distiller (except for spirits to be warehoused) unless the receipt for the duty on the spirits to be removed be produced with the request note.

(6.) The officer must indorse on the receipt the quantity of spirits for which the permit is granted and the date of the permit.

Penalties for removal of spirits without permit and fraudulent use of permit.

107. (1.) If any person—

(*a.*) sends out, delivers, removes, or receives any spirits required to be accompanied by a permit without a permit; or

(*b.*) sends out, delivers, removes, or receives any spirits in quantity greater than, or differing in quality, denomination, or strength from that expressed in the permit accompanying the same; or

(*c.*) having obtained a permit, does not send out there-

with the spirits therein described or return the permit to the proper officer within the time by law required; or

(*d.*) requests, obtains, or uses any permit, or causes or suffers any permit to be requested, obtained, or used for any purpose other than that of accompanying the removal and delivery of spirits therein described; or

(*e.*) produces, or causes or suffers to be produced to any person any permit as having been received with spirits other than those therein described; or

(*f.*) in any manner uses, or causes or suffers to be used, any permit so that any account of spirits kept or checked by an officer may be frustrated or evaded;

he shall, in addition to any other penalty or forfeiture, incur a fine of five hundred pounds.

(2.) Every permit used for any purpose other than that of accompanying the removal and delivery of the spirits for which it is granted and as therein expressed, shall be deemed to be a false permit, and any unlawful use thereof shall, in addition to any other penalty or forfeiture, subject the person using it to all penalties and forfeitures imposed by law upon any person for using a false permit.

(3.) If a distiller, rectifier, dealer, or retailer is convicted of an offence against this section he shall forfeit his licence, and no new licence shall be granted to him for the remainder of the year for which such forfeited licence would have been in force.

Certificate book.

108. (1.) Every rectifier, dealer, and retailer must, by written request, obtain from the proper officer a certificate book containing forms of certificates and counterfoils, for which he must give a receipt.

(2.) Before sending out or delivering any spirits required to be accompanied by a certificate, he must enter in one of these certificates, and in its counterfoil, the particulars specified in that behalf in the Fourth Schedule, and must sign the certificate.

(3.) He must deliver the certificate with the spirits to the person to whom the spirits are entered in the certificate.

(4.) He must use the certificates in the order in which they are numbered in the certificate book.

(5.) He must keep the certificate book in his premises, open to inspection by any officer, and must allow any officer to make entry therein, or take any extract therefrom.

(6.) He must return the certificate book when it is exhausted, or on request, to the proper officer, who shall give a receipt for it.

Penalties in case of removal of spirits without certificate.

109. (1.) If a rectifier, dealer, or retailer sends out, delivers, or receives any spirits required to be accompanied by a certificate without a certificate or accompanied by an inaccurate certificate, he shall for each offence incur a fine of one hundred pounds, and all spirits sent out, delivered, or received in contravention of this section shall be forfeited.

(2.) A penalty shall not be incurred under this section by reason only of the spirits being in strength not more than one per centum above or two per centum below the strength expressed in the certificate.

110. (1.) If a rectifier, dealer, or retailer uses or suffers to be used any certificate taken from his certificate book, except for the removal of spirits from his own stock, or delivers or parts with any form of certificate without filling it up, as required by this Act, he shall for each offence incur a fine of five hundred pounds. Fraudulent use of certificate.

(2.) If any person uses a certificate or form of certificate, whether filled up or not, so that the account of spirits kept or checked by an officer, or any examination of spirits by an officer, is or may be frustrated or evaded, he shall for each offence incur a fine of five hundred pounds.

(3.) If a rectifier, dealer, or retailer is convicted of an offence under this section, he shall forfeit his licence, and no new licence shall be granted to him for the remainder of the year for which such forfeited licence would have been in force.

111. (1.) Every rectifier, dealer, and retailer must on receiving spirits accompanied by a permit or certificate, immediately cancel the permit or certificate in the prescribed manner, and must deliver the cancelled permit or certificate to the officer who first inspects his premises after the receipt thereof. Cancelling and delivery of permits and certificates.

(2.) If any person contravenes this section he shall incur a fine of fifty pounds.

(3.) But no penalty shall be incurred for the failure to deliver a permit or certificate if it is proved that the failure is caused by the permit or certificate having been lost or destroyed more than three months after the date thereof.

112. (1.) Every rectifier, dealer, and retailer must provide himself with and keep a stock book according to a pattern to be obtained on application to the proper officer, and must, on receiving any spirits, and also on sending out or delivering any spirits required to be accompanied by a certificate, enter in his stock book the particulars specified in that behalf in the Fourth Schedule. Stock book.

(2.) He must make these entries at such times as an officer directs, or in the absence of any such direction before the expiration of the day on which the spirits are received, sent out, or delivered.

(3.) He must keep the stock book in his premises, open to inspection by any officer, and must allow any officer to make any entry therein or take any extract therefrom.

(4.) He must keep it open to such inspection for not less than twelve months after it is filled up.

113. If a rectifier, dealer, or retailer— Offences with respect to certificate books and stock books.

(*a.*) fails to obtain, provide, keep, produce, or return a certificate book or a stock book as by this Act required, or to make therein respectively the entries by this Act required; or

(*b.*) hinders or obstructs any officer in examining a certificate book or a stock book, or in making any entry therein or extract therefrom; or

(*c.*) cancels, alters, obliterates, or destroys any part of a certificate book or a stock book or any entry therein; or

(*d.*) makes a false entry in a certificate book or a stock book; or

(*e.*) separates any certificate, or form of certificate, from its counterfoil without properly filling up the certificate and counterfoil, or except on the occasion of sending out or delivering spirits therewith;

he shall for each offence incur a fine of one hundred pounds

Miscellaneous.

Rules for ascertaining quantity of spirits by weighing.

114. For the purpose of ascertaining by weighing the quantity of spirits in a cask, Table B. in the Second Schedule shall be used, and the quantity ascertained thereby in accordance with the rates prefixed thereto shall be deemed to be the true quantity.

Remission of duty for spirits lost or destroyed.

115. In the event of the loss or destruction by fire or other unavoidable accident of any wash or spirits in a distillery, or of any spirits when deposited in a distiller's or Excise warehouse or whilst being received into or delivered from a spirit store or such warehouse, or whilst being removed under bond on shipboard, or whilst being shipped or landed, the Commissioners shall, on proof to their satisfaction of the loss or destruction, remit the duty payable or paid in respect of the wash or spirits so lost or destroyed.

PART II.

METHYLATED SPIRITS.

Part I. not to apply to methylated spirits.

116. Part I. of this Act shall not apply to methylated spirits.

Exemption of methylated spirits from duty.

117. (1.) Methylated spirits shall, subject to the provisions of this Act, be exempt from duty.

(2.) If a rectifier methylates duty-paid spirits he shall be allowed a drawback at the rate of the duty chargeable on British spirits of the like strength.

Persons authorized to methylate.

118. (1.) The following persons, and no others, are authorized to methylate:

(*a.*) Distillers, if so authorized by the Commissioners.

(*b.*) Rectifiers, if so authorized by the Commissioners.

(*c.*) Persons licensed to methylate.

(2.) Such persons are called in this Act authorized methylators.

Persons authorized to supply methylated spirits.

119. The following persons, and no others, are authorized to supply methylated spirits:

(*a.*) Authorized methylators.

(*b.*) Persons licensed to retail methylated spirits, in this Act called retailers of methylated spirits.

Authority to use methylated spirits.

120. The Commissioners may, if they think fit, authorize any person to receive methylated spirits from an authorized methylator for use in any art or manufacture carried on by

him. The authority shall not be granted until the applicant has given the prescribed security that he will use the methylated spirit in the art or manufacture and for no other purpose, and that he will observe the provisions of this Act and the prescribed regulations.

Persons to whom methylated spirits may be supplied by authorized methylator.

121. An authorized methylator must not supply methylated spirits to any person except—

(a) a retailer of methylated spirits, or

(b) a person authorized to receive methylated spirits, or

(c) if the methylator is a distiller, a rectifier authorized to methylate, or a person licensed to methylate.

Place of methylation.

122. (1.) Spirits may be methylated in the following places—

(a.) A building or room approved by the Commissioners and entered for the purpose by the methylator.

(b.) A warehouse provided for the purpose by the Commissioners.

(c.) An Excise warehouse, with the permission of the Commissioners.

(2.) The Commissioners may charge for warehousing and labour at the rate of one penny per gallon per month for all spirits methylated or stored in a warehouse provided by them.

Materials for and mode of methylation.

123. (1.) The following and no other spirits may be used for methylation:

(a.) Plain spirits of strength not less than fifty per centum above proof, and unsweetened foreign spirits of like strength.

(b.) Rum of strength not less than twenty per centum above proof.

(2.) The quantity of spirits used for methylation at any one time shall not be less than—

(a.) In the case of British spirits, four hundred and fifty gallons;

(b.) In the case of foreign spirits in an Excise warehouse, the contents of the cask in which the spirits are imported.

(3.) The substance mixed with spirits for the purpose of methylation must be wood naptha, or methylic alcohol in the proportion of not less than one-ninth of the bulk of the spirits, or some other substance approved for the purpose by the Commissioners; and may, if the Commissioners think fit, be provided by them at the expense of the methylator.

(4.) The substance must, before the mixing thereof, be examined and approved by an officer appointed in that behalf.

(5.) Foreign spirits may not be used for methylation until the difference between the duty of Customs chargeable thereon and the duty of Excise chargeable on British spirits has been paid.

(6.) With respect to the removal of spirits and substances for methylation and the time and mode of methylation the prescribed regulations must be observed, and the prescribed security must be given.

Supply and receipt of methylated spirits.

124. (1.) An authorized methylator must not supply methylated spirits except in vessels containing not less than five gallons.

(2.) Each vessel must be distinctly labelled with the words "methylated spirits" and must be accompanied by a permit or such document in the nature of a permit as the commissioners may prescribe.

(3.) The sale, delivery, and removal of methylated spirits from the premises of an authorized methylator must be in accordance with the prescribed regulations, and subject to the prescribed security.

(4.) Every person authorized to receive methylated spirits must, on ordering the same, correctly fill up the prescribed form of requisition and counterfoil with the prescribed particulars, and send with the requisition a certificate signed by the proper officer that the applicant is a person so authorized, and must keep the counterfoil and produce it on request to any officer.

Stock account.

125. (1.) The proper officer shall keep a stock account of all spirits computed at proof methylated or received by an authorized methylator.

(2.) If the quantity of methylated spirits in the possession of an authorized methylator exceeds by more than one per centum the quantity which ought by the stock account to be in his possession he shall forfeit the whole excess.

(3.) If the quantity of methylated spirits in the possession of an authorized methylator is less by more than two per centum than the quantity which ought by the stock account to be in his possession, he shall pay on the whole deficiency the duty payable on British spirits.

Rules to be observed by retailers of methylated spirits.

126. (1.) A retailer of methylated spirits—

(*a.*) must make entry with the Commissioners of each room or place where he intends to keep and sell the spirits; and

(*b.*) must not keep or sell the spirits in any place which is not so entered; and

(*c.*) must not receive or have in his possession at any one time a greater quantity of methylated spirits than fifty gallons; and—

(*d.*) must not receive methylated spirits except from an authorized methylator or a retailer of methylated spirits; and

(*e.*) must not receive methylated spirits from a retailer of methylated spirits in a quantity exceeding one gallon at a time; and

(*f.*) must not sell to or for the use of any one person more than one gallon of methylated spirits at a time; and

(*g.*) must, on request, at all reasonable times produce his stock of methylated spirits for examination by an officer; and

(*h.*) must keep an account, in the prescribed form, of his stock of methylated spirits and of the sale thereof.

If a retailer of methylated spirits contravenes this sec-

tion he shall for each offence incur a fine of fifty pounds and the spirits with respect to which the offence is committed shall be forfeited.

Powers of entry, inspection, and sampling.

127. (1.) An officer may in the daytime enter and inspect the premises of an authorized methylator or a retailer of methylated spirits, or any premises of a person authorized to receive methylated spirits, and inspect, examine, and take samples of any methylated spirits therein, paying a reasonable price for each sample.

(2.) If any person refuses to allow an officer to exercise any of these powers, he shall for each offence incur a fine of fifty pounds.

Unlawful supply of methylated spirits.

128. (1.) If any person supplies, removes, or receives methylated spirits in contravention of this Act he shall for each offence incur a fine of fifty pounds, and the spirits with respect to which the offence is committed shall be forfeited.

(2.) If an authorized methylator supplies any methylated spirits to any person after having received notice from the proper officer that the person to whom the spirits are supplied is not authorized to receive them, he shall pay on the spirits so supplied the duty payable on British spirits.

Unlawful possession of methylated spirits.

129. If any person—

(*a*) being an authorized methylator, has in his possession any methylated spirits in any place where he is not authorized to keep them; or

(*b*) not being an authorized methylator, has in his possession any methylated spirits not obtained from a person authorized to supply them,

he shall incur a fine of one hundred pounds, and the spirits with respect to which the offence is committed shall be forfeited.

Preparation, sale, or use of methylated spirits.

130. (1.) If any person—

(*a*) prepares or attempts to prepare any methylated spirits for use as or for a beverage or as a mixture with a beverage; or

(*b*) sells any methylated spirits, whether so prepared or not, as or for a beverage, or mixed with a beverage; or

as or for a beverage or medicine.

(*c*) uses any methylated spirits or any derivative thereof in the preparation of any article capable of being used wholly or partially as a beverage, or internally as a medicine; or

(*d*) sells or has in his possession any such article in the preparation of which methylated spirits or any derivative thereof has been used,

he shall for each offence incur a fine of one hundred pounds, and the spirits with respect to which the offence is committed shall be forfeited.

(2.) Nothing in this section shall apply to the use of methylated spirits, or any derivative thereof, in the preparation of sulphuric ether or chloroform, for use as a medicine, or in any art or manufacture, or prevent the sale or possession of any sulphuric ether or chloroform for such use.

Offences with respect to methylated spirits mixed with gum resin.

131. Where methylated spirits have been mixed with gum resin for forming any article, if any person separates the gum resin from the spirits, or alters the article in any way except by adding gum resin, or by adding a substance for the sole purpose of colouring, he shall for each offence incur a fine of two hundred pounds, and forfeit the spirits and article with respect to which the offence is committed.

Power to revoke licence, &c.

132. The Commissioners may suspend or revoke any licence to methylate, authority, or approval granted under this part of this Act.

PART III.

SUPPLEMENTAL.

Purified Methylic Alcohol.

Purified methylic alcohol to be deemed low wines.

133. (1.) Any liquid containing methylic alcohol so purified or otherwise prepared by filtration or any other process as to be free wholly or partially from any flavour or odour which would otherwise pertain to it shall be deemed to be low wines, and to have been so prepared for the purpose of distilling spirits therefrom, and shall be chargeable with duty and otherwise subject to the regulations to which spirits are subject under Part I. of this Act.

(2.) Provided that the Commissioners may, if they think fit, dispense with or modify those regulations with respect to any such preparation.

Sykes's Hydrometer.

Strength of spirits to be ascertained by Sykes's hydrometer.

134. All spirits shall be deemed to be of the strength denoted by Sykes's hydrometer as ascertained by any officer or any officer of Customs in accordance with the table lodged with the Commissioners, and entitled a table of the strength of spirits denoted by Sykes's hydrometer.

Scales, Weights, Measures, Locks, and Fastenings.

Excise traders to provide scales, weights, and measures.

135. (1.) Every Excise trader must provide sufficient and just scales and weights, and a set of standard measures for the purpose of weighing, measuring, and taking an account of the spirits, goods, and commodities in his warehouse, stock, or possession, and of any casks or vessels used for the purpose of containing any such spirits, goods, or commodities.

(2.) The weights and measures must be of the prescribed denominations.

(3.) The Excise trader must maintain and keep the scales, weights, and measures in such proper and convenient place in his distillery, warehouse, or other premises as the proper officer approves, and so that the same shall be at all times ready for the use of officers.

(4.) The Excise trader must permit any officer to use the scales, weights, and measures for the purpose aforesaid, and must, with his servants and workmen, whenever

required by any officer, weigh or measure, and assist him in weighing or measuring, as he requires, and in taking account of any such spirits, goods, or commodities as aforesaid.

(5.) For any refusal or neglect on the part of an Excise trader to comply with any of the foregoing provisions of this section he shall incur a fine of one hundred pounds.

(6.) If any Excise trader provides or uses or permits to be used any false, unjust, or insufficient scales or weight or measure, or practices any device or contrivance by which any officer may be prevented from, or hindered or deceived in taking the just and true quantity, weight, or measure of any spirits, goods, or commodities, or of any casks or vessels, he shall incur a fine of two hundred pounds, and any such scales, weights, and measures shall be forfeited.

Locks and fastenings.

136. (1.) Where any warehouse, room, place, vessel, utensil, or fitting belonging to any Excise trader is by this Act directed to be secured or locked, the Excise trader must to the satisfaction of the proper officer, provide, affix, repair, and renew all fastenings requisite for the purpose of enabling officers to affix locks thereto, or otherwise to secure the same.

(2.) If the Excise trader fails so to do the proper officer may provide, affix, repair, or renew the fastenings, and the expense thereof shall be paid on demand by the Excise trader.

(3.) If the Excise trader fails on demand to pay the expense he shall incur a fine of one hundred pounds.

(4.) All requisite locks or keys shall be provided by the Commissioners, at the expense of the revenue.

(5.) If any Excise trader, or his servant or workman, wilfully destroys or damages any such fastening, or any lock or key belonging thereto, or any lock label, or opens or removes any lock, fastening, or lock label, or improperly obtains access into any warehouse, room, place, vessel, utensil, or fitting, or has any fastening, vessel, utensil, or fitting so constructed that the security intended to be obtained by any lock or fastening may be defeated, the excise trader shall incur a fine of five hundred pounds.

Powers of Officers.

Power of entry and examination by officers.

137. (1.) An officer may, at any time, either by day or by night, enter any part of the premises of, or house or place whatsoever belonging to or made use of by, a distiller or rectifier, and search for, examine, gauge, and take an account of any still or other vessel or utensil therein, and also any spirits or materials for the manufacture of spirits therein.

(2.) If an officer, after having demanded admission into the premises of a distiller or rectifier and declared his name and business at any entrance or window thereof, is not immediately admitted, the officer, and any person acting in his aid, may at any time, either by day or by night (but at night only in presence of an officer of the peace),

break open any door or window of the premises, or break through any wall thereof, for the purpose of obtaining admission, and the distiller or rectifier shall incur a fine of two hundred pounds.

Supply of ladders and lights.

138. Every distiller or rectifier must, on demand by an officer, made on the premises, either by day or by night, and for the purpose of enabling him to search for, examine, gauge, or take an account of any vessel, utensil, spirits, or materials therein, provide ladders of sufficient length and strength, and place them firmly and conveniently, and supply sufficient lights and aid.

If a distiller or rectifier contravenes this section he shall for each offence incur a fine of one hundred pounds.

Power to search for pipes, &c.

139. Any officer, or person acting in his aid, may, either by day or by night, for the purpose of searching for any pipe, cock, conveyance, or utensil, break up the ground in or adjoining or near the premises of a distiller or rectifier, or any wall or partition of his premises or any other place, and may, on finding any pipe or conveyance leading to or from the premises, break up or break any ground, house, wall, or other place through or into which the pipe or conveyance leads, and may break up or cut away any such pipe or conveyance, and turn any such cock, and examine whether any such pipe or conveyance conveys or conceals any spirits or any liquor used in the manufacture of spirits, so as to prevent a true account thereof from being taken.

If any damage is done in the search and such search is unsuccessful the damage shall be made good.

Power to enter and search for illicit stills and spirits.

140. (1.) If any officer or any officer of Customs makes oath that there is good cause to suspect that any still, vessel, utensil, spirits or materials for the manufacture of spirits is or are unlawfully kept or deposited in any house or place, and states the grounds of suspicion, any justice may, if he thinks fit, issue a warrant authorizing the officer and any person whom he calls to his assistance to search the house or place; and a like warrant may be issued by any two of the Commissioners in case the house or place is situate within the limits of the chief office of Inland Revenue.

(2.) Any person so authorized may, either by day or by night, but at night only in the presence of an officer of the peace, break open and forcibly enter any such house or place, and seize any still, vessel, utensil, spirits, or materials for the manufacture of spirits found therein, and either detain the same or remove them to a place of safe custody.

(3.) Every still, vessel, or utensil, and all spirits and materials so seized shall be absolutely forfeited, and the owner of any such still, vessel, or utensil, or the person in whose custody the same is found, shall for every place in which the same is found, and also for every such still, vessel, or utensil incur a fine of two hundred pounds.

(4.) If any damage is done by such forcible entry, and the search is unsuccessful, the damage shall be made good.

(5.) An officer may seize any such still, vessel, utensil, spirits, or materials without a warrant.

141. An officer may at any time enter the premises of a dealer or retailer and inspect and examine the spirits in his stock or possession, and take samples of any such spirits, paying for any sample so taken the usual price thereof.

Power to enter premises of dealer or retailer and examine and take samples.

142. Every distiller, rectifier, dealer, and retailer must, when required by an officer, assist him by a sufficient number of servants in taking account of his stock, and shall for any neglect or refusal so to assist incur a fine of fifty pounds.

Distillers, &c. to assist in taking account.

143. (1.) An officer may require a distiller at any time when his still is not at work, to cause the water in any worm tub in his distillery to be drawn off, and the tub and worm to be cleansed.

Power to require water to be drawn off from worm tub.

(2.) In such case the water must be kept out of the worm tub for two hours, or until the officer has finished his examination of it, whichever first happens.

(3.) If a distiller fails to comply with any requirement under this section he shall incur a fine of two hundred pounds, and the officer may draw off the water or any portion of it, and keep it drawn off as long as he thinks necessary.

General Offences.

144. (1.) If any person removes any wort, wash, low wines, feints, or spirits from the premises of a distiller, contrary to the provisions of this Act, or knowingly buys or receives any wort, wash, low wines, feints, or spirits so removed from the premises of a distiller, he shall incur a fine of one hundred pounds.

Unlawful removal of malt, wort, or wash.

(2.) In default of payment of the fine on summary conviction the offender shall be imprisoned with or without hard labour. The term of imprisonment in Scotland or Ireland shall be not less than two months nor more than six months.

(3.) All such wort, wash, low wines, feints, or spirits so removed shall be forfeited.

(4.) Any officer may arrest any person found committing an offence against this section.

145. (1.) Any officer or any officer of Customs, and any officer of the peace having a commission from the Commissioners, may stop and detain any person found carrying or removing any spirits, and may examine the spirits and require the production of a permit or certificate authorising the removal thereof.

Arrest of and penalties on persons unlawfully removing spirits.

(2.) If a permit or certificate is produced agreeing with the spirits in all respects the officer may endorse thereon the time and place of his examination thereof.

(3.) If any person is found carrying or removing any spirits exceeding the quantity of one gallon of the same denomination for the same person and does not, on request by any such officer, forthwith produce a permit or certificate authorizing the removal of the spirits, he shall incur a fine of one hundred pounds, and the spirits shall be forfeited.

(4.) The sum to which the fine may be mitigated in Scotland or Ireland shall not be less than ten pounds.

(5.) In default of payment of the fine on summary conviction the offender shall be imprisoned with or without hard labour. The term of imprisonment in Scotland or Ireland shall be not less than one month nor more than six months.

(6.) Any officer may arrest any person found committing an offence against this section.

Unlawful hawking and sale of spirits.

146. (1.) If any person hawks, sells, or exposes to sale any spirits otherwise than in premises for which he is licensed to sell spirits he shall incur a fine of one hundred pounds, and the spirits shall be forfeited.

(2.) The sum to which the fine may be mitigated in Scotland shall not be less than twenty-five pounds, or, in Ireland, shall not be less than six pounds.

(3.) In default of payment of the fine on summary conviction the offender shall be imprisoned with or without hard labour. The term of imprisonment in Scotland or Ireland shall be not less than two months nor more than three months.

(4.) Any person may arrest a person found committing an offence against this section.

Sale of spirits for unlawful purposes.

147. If any person knowingly sells or delivers, or causes to be sold or delivered, any spirits to the end that they may be unlawfully retailed or consumed or carried into consumption, he shall, in addition to any other penalty, incur a fine of one hundred pounds.

Unlawful purchase of spirits.

148. If any person receives, buys, or procures any spirits from a person not having authority to sell or deliver the same, he shall incur a fine of one hundred pounds.

Penalty for possession of spirits on which duty has not been paid.

149. If any person knowingly buys or receives, or has in his possession any spirits after they have been removed from the place where they ought to have been charged with duty and before the duty payable thereon has been charged and paid or secured to be paid or the spirits have been condemned as forfeited, he shall forfeit the spirits and incur a fine equal to treble the value of the spirits.

Forcibly opposing execution of Act.

150. A person shall incur a fine of five hundred pounds if he commits any of the following offences:

(*a.*) Assaults an officer acting under this Act, or any person acting in his aid.

(*b.*) Assaults any person who has discovered or given, or is about to discover or give information or evidence against, or has seized, or is bringing to justice, any offender against this Act.

(*c.*) Assaults any person who has seized or is about to seize or examine any goods as forfeited under this Act.

(*d.*) Forcibly opposes the execution of any of the powers given

(*e.*) Being armed with an offensive weapon, or in a violent manner, rescues any offender arrested or goods seized under this Act, or prevents the arrest of any such offender or seizure of any such goods, or offers or threatens to oppose the execution of any of the powers given by this Act.

151. Every person shall incur a fine of five hundred pounds who, in or with reference to any matter under the laws of excise relating to the duties on spirits, Misconduct of and collusion with officers.

(a) Not being authorised so to do, gives or promises to give, directly or indirectly, any reward to an officer or a person employed by the Commissioners, in respect of the performance or non-performance by any such officer or person of his duty or employment; or

(b) Agrees with or proposes to any such officer or person to do or permit to be done anything in contravention or evasion of this Act, or of his duty; or

(c) Being an officer or a person employed by the Commissioners—

(i) demands or receives, except from or through the Commissioners, any reward in respect of the performance or non-performance of his duty or employment, or

(ii) by any wilful act, neglect, or default does, or permits, or agrees to do or permit anything in contravention or evasion of this Act or of his duty.

If any such officer or person is convicted of either of these offences he shall be thereafter disqualified from serving Her Majesty in any office or employment.

152. If any person by himself or by any person in his employment obstructs, hinders, or molests an officer or an officer of customs in the execution of his duty, or any person acting in the aid of any such officer, he shall incur a fine of two hundred pounds, and if the offender is a distiller the Commissioners may, upon his conviction, suspend or revoke his license. Obstruction of officers.

153. If any officer of the peace wilfully refuses or neglects to aid in the execution of this Act he shall, on summary conviction, incur a fine of twenty pounds. Neglect of duty by officer of the peace.

154. (1.) Where any spirits or goods are forfeited under this Act they may be seized by an officer or an officer of customs. Provisions as to forfeiture.

(2.) Where any spirits or materials for making spirits are forfeited under this Act, all casks or other utensils containing the same shall also be forfeited.

(3.) Where any spirits are forfeited by an Excise trader, the Commissioners may, if they think fit, take from his stock, instead of the spirits forfeited, the same quantity of any other spirits.

Informers.

155. (1.) On the commission of any offence against this Act, the offender who, before any information is lodged against him in respect of the offence, first discovers and informs against any other offender, shall, on the conviction of the person against whom the information is given, be discharged and acquitted from all penalties or disqualification to which at the time of giving the information he may be liable by reason of the offence committed by him. Discharge and reward of informers.

(2.) When, on the conviction of any person for an offence against this Act, the pecuniary penalty imposed for the offence is not paid and cannot be levied, or the person incurring the penalty is sent to prison in default of payment, the Commissioners may cause such reward as they think fit, not exceeding in each case fifty pounds, to be paid in such shares and proportions as they think fit to the persons who appear to the Commissioners to be entitled thereto as informers.

Procedure.

Recovery of fines.

156. Any fine for any offence against this Act may be sued for and recovered, and any goods, chattels, or commodities forfeited under this Act may be returned for condemnation and condemned in the manner provided by law for the recovery of fines or penalties and for the condemnation of goods forfeited under any Act or Acts for the time being in force relating to the revenue of excise or customs.

Forms and Schedules.

Forms of notices, and documents.

157. (1.) The several entries, notices, declarations, books, accounts, and returns under this Act shall be in the prescribed form.

(2.) But in any proceeding for an offence against this Act against an Excise trader any notice given or declaration made by him or on his behalf shall be valid as against him, notwithstanding any imperfection or defect in the form thereof, or in the giving, making, or service thereof.

Application of previous Acts to permits, &c. under this act.

158. All permits, certificates, forms of requisition, and other documents under this Act shall, subject to the provisions of this Act, be granted, obtained and used, under and in accordance with the provisions of any Acts of Parliament regulating the granting and using of permits and certificates, and the provisions of those Acts with respect to permits, certificates, and other similar documents granted, obtained, or used thereunder, shall apply to permits, certificates, and other similar documents granted, obtained, or used under this Act, and to persons granting, obtaining, or using them.

Regulations to be prescribed.

159. The Commissioners and the Commissioners of Customs respectively shall prescribe such regulations as they may from time to time think necessary for carrying into execution the provisions of this Act.

Effect of Schedules.

160. The Schedules shall be construed and have effect as part of this Act.

Construction of Acts, &c. referring to repealed enactments.

161. Where any enactment or document refers to any Act or enactment repealed by this Act, it shall be construed as referring to this Act, or to the corresponding enactment of this Act.

Savings and Repeal.

Saving with respect to premises entered on 5th April 1825.

162. (1.) The sections of this Act which prohibit the use of a distillery within a quarter of a mile from the premises of a rectifier and the use of rectifier's premises within a

quarter of a mile of a distillery shall not apply to any premises which on the fifth day of April one thousand eight hundred and twenty-five were entered and used by a distiller or rectifier if those premises have been so entered and used continuously since, and so long as they continue to be so entered and used, provided that there is not between the premises of the distiller and those of the rectifier any communication by which wort, wash, or spirits may be removed from the one to the other except an open public street or carriage road.

(2.) Nothing in this Act shall prevent the use by a distiller or rectifier, under and in accordance with a special licence granted by the Commissioners of the Treasury, of any premises which on the fifth day of April one thousand eight hundred and twenty-five were entered and used by a distiller or rectifier, and which have continued to be so entered and used up to the commencement of this Act until the expiration or revocation of such licence.

Saving for articles in use before 28th August 1860.

163. Nothing in this Act shall prevent the Commissioners from permitting any distiller or rectifier formerly working under any Act in force before the twenty-eighth day of August one thousand eight hundred and sixty, and having worked continually since, to keep or use such of the vessels or casks then fixed or used on his premises as are, in the judgment of the Commissioners, secure and adapted to the purposes for which they are required under this Act.

Repeal of Acts in Schedule.

164. The enactments specified in the Fifth Schedule are hereby repealed, from and after the commencement of this Act, to the extent specified in the third column of that Schedule.

Provided that all existing bonds and securities given under or in pursuance of any enactment hereby repealed shall have the same force and effect as if they had been given under or in pursuance of this Act, and this repeal shall not affect—

(*a*) anything done or suffered before the commencement of this Act under any enactment repealed by this Act; nor

(*b*) any right or privilege acquired, or duty or liability imposed or incurred under any enactment so repealed; nor

(*c*) any fine, forfeiture, or other punishment incurred or to be incurred in respect of any offence committed before the commencement of this Act against any enactment so repealed; nor

(*d*) the institution or prosecution to its termination of any legal proceeding or other remedy for ascertaining any such liability, or enforcing, or recovering any such fine, forfeiture, or punishment as aforesaid.

A. D. 1880.

SCHEDULES.

FIRST SCHEDULE.

Rules as to Vessels and Utensils.

FIRST PART.

VESSELS TO BE ERECTED BEFORE MAKING ENTRY BY A DISTILLER.

The following vessels must be erected after the distiller's licence has been obtained, and before entry of a still is made, and must thereafter be kept during the continuance of the distiller's licence:

a. If the still is of such kind that the produce of the wash on the first distillation is spirits and feints,—

1 wash charger.
1 feints receiver.
1 spirit receiver.

b. If the still is of such kind that the produce of the wash on the first distillation is low wines, then, in addition,—

1 low wines receiver.
1 low wines and feints charger.

SECOND PART.

MAXIMUM NUMBER OF VESSELS IN DISTILLERY.

There must not be kept in any distillery any vessel of the description hereinafter mentioned in excess of the number hereinafter specified in that behalf.

1 wash charger.
1 spirit receiver.
2 feints receivers.
2 low wines receivers.
2 low wines and feint chargers.
In connexion with each charger, one intermediate still charger.

But a distiller may keep two spirit receivers, if he affixes to each of them, to the satisfaction of the Commissioners, an apparatus for preventing the supply cock and the discharge cock being both open at the same time, and for registering the number of times each cock has been opened.

THIRD PART.

CONSTRUCTION AND CONNEXION OF VESSELS IN DISTILLERY.

Fermenting Back.

1. There must be fixed in every fermenting back, to the satisfaction of the proper officer, a discharge cock or plug and plug-hole, through which the wash in the back may be conveyed by a main pipe or open trough into the jack back of wash charger.

2. This pipe or trough must be so placed and fixed that all wash or liquor put therein be forthwith discharged into the jack back of wash charger, and not elsewhere.

3. There may be placed in a fermenting back a close

metal pipe for conveying through the back hot or cold air or water to promote or retard the fermentation of the wort or wash, but this pipe must not open into the back.

4. Except as aforesaid, and except the pipe for conveying wort into the fermenting back from the coolers, and a sewer cock or plug for carrying off the water wherewith the back is cleansed, there must not be any pipe or conveyance entering into or passing out of the back.

Wash Charger.

5. The wash charger must be of capacity not less than half that of the largest fermenting back.

6. It must be connected with the fermenting backs by one close metal pipe, with one end fixed into the pump placed in the jack back, or if a jack back is not used, into the pipe or trough communicating with the fermenting backs, and the other end into the wash charger.

7. It must be connected with the wash stills by one close metal pipe, with a branch to each still, or to the intermediate still charges.

8. It may be connected with the feints receiver by means of a close pump or metal pipe.

9. There must be a cock on each of these connecting pipes.

Low Wines Receiver.

10. A low wines receiver must be connected with the safe at the end of the worm of the wash still by one close metal pipe, attached to and leading directly from the safe in such a manner that all low wines running from the safe into the pipe shall immediately be discharged into the receiver, and must have fixed in it a pump or discharge cock for the conveyance of low wines into the low wines and feints charger.

Feints Receiver.

11. A feints receiver must be connected with the safe at the end of the worm of the still by one close metal pipe attached to and leading directly from the safe, in such manner that all feints running from the safe into the pipe shall immediately be discharged into the receiver, and must have fixed in it a pump or discharge cock for the conveyance of feints into the low wines and feints charger, or wash charger, or intermediate still charger.

Low Wines and Feints Charger.

12. A low wines and feints charger must be connected with the still by a close metal pipe with a cock thereon, one end of the pipe being fixed into the bottom of the charger, and the other attached to the pump or to the still, and the charger must be connected with the low wines receiver and feints receiver by close metal pipes, whereof one end must be fixed into the charger, and the other end attached to the pump or discharge cock fixed in each receiver.

Spirit Receiver.

13. A spirit receiver must be connected with the safe at the end of the worm of the still by one close metal pipe attached to and leading directly from the safe in such manner that all spirits running from the safe into the pipe shall immediately be discharged into the receiver.

14. There must be fixed in it either a pump or a proper discharge cock for drawing off the spirits from it, and conveying the same through one close metal pipe into the entered cask or vat in the spirit store.

Spent Lees Receiver.

15. A spent lees receiver must be connected with the low wines still by one close metal pipe with a cock thereon fixed into the receiver, and attached to and leading directly from the discharge cock of the still. In the bottom of the receiver there must be a discharge hole with a secure internal plug. At not more than one-third of its depth from the top there must be an opening covered and secured by a metal plate perforated with holes of not more than four-tenths of an inch in diameter.

Intermediate Still Charger.

16. An intermediate still charger must have one fixed pipe with a cock thereon leading from the wash charger or low wines and feints charger, one fixed discharge pipe with a cock thereon leading to the still, and may have one pipe with a cock thereon leading from the feints receiver, and one pipe leading from the water cistern.

Store Casks or Vats.

17. Every store cask or vat must be a close covered vessel, and must be secured with fastenings to the satisfaction of the proper officer.

General.

18. Every wash charger, low wines receiver, feints receiver, low wines and feints charger, spirit receiver, spent lees receiver, and intermediate still charger, must be a close covered vessel, and, except as above specified, must not have any opening, or communication with any other vessel or utensil.

FOURTH PART.

CONSTRUCTION AND FITTINGS OF STILL.

1. In every still there must be an opening to enable an officer to take gauges and samples. This opening must be not less than two inches in diameter, and must be so contrived that the officer may take samples from the still with a phial draw perpendicularly through it.

2. Proper fastenings must be provided for locking and securing this opening, and for securing the head of the still, the furnace door thereof, and any cock or valve on any pipe conveying steam into or about the still.

3. A still and its worm may have an air valve or conductor approved by the Commissioners.

4. The end of the worm must be enclosed and secured in a safe in the prescribed manner.

5. There must be fixed to every still a discharge cock not more than three feet distant from the body of the still, and firmly attached to the still by a close metal pipe. This discharge cock must be so placed as to be easily accessible to the officer.

6. If there is not a spent lees receiver, the discharge cock on a low wines still must be kept securely locked by the officer, except when opened by him on reasonable notice given by the distiller. Such notice must not be given more than once in six hours.

7. Except as permitted or required by this Act, there must be no pipe leading directly or indirectly to or from a still, and no opening into or out of a still or the worm of a still.

Fifth Part.

SPIRIT RECEIVERS.

1. Every spirit receiver must be made, placed, and fixed to the satisfaction of the Commissioners.

2. It must be of a depth sufficient to admit of the gauge of spirits being taken of the depth of fifteen inches at least at the dipping hole.

3. It must be so filled with spirits that at the time of gauging it for the purpose of charging duty the depth of spirits is not less than fifteen inches.

4. But where a spirit receiver was in use in a distillery before the 10th of October, 1853, the Commissioners may allow its use, though the spirits distilled are insufficient to fill it to the depth of fifteen inches, and that where the depth of spirits in a spirit receiver is less than fifteen inches the charge of spirits therein shall be made according to the gauge indicated by the next tenth of an inch above the actual depth, and in respect of this excess in gauge the distiller shall be allowed a deduction of one-half of a gallon in every hundred gallons charged.

5. Every distiller must, if so required by the Commissioners, erect and apply, at his own expense, any apparatus or machine which the Commissioners think proper for preventing the supply cock and the discharge cock of the spirit receiver being both open at the same time, and for registering the number of times each cock has been opened.

Sixth Part.

PIPES, COCKS, AND VALVES.

1. Every pipe used by the distiller must, unless used exclusively for the discharge of water and spent wash, be so fixed and placed as to be capable of being examined for the whole of its length.

2. The pipes must be painted and kept painted as follows:—

If for the conveyance of—

Wort or wash	red.
Low wines or feints	blue.
Spirits	black.
Water	white.

3. Every cock and valve kept or used by the distiller must be constructed in the prescribed or approved manner.

Seventh Part.

DIPPING HOLES.

1. At or near the top of every entered cask or vat for storing or keeping spirits on the premises of a distiller, there must be a dipping hole at which an officer may conveniently take his dip or gauge of the contents of the vessel.

2. A metal plate must be fixed at the dipping hole to secure it from being worn or altered.

3. Every charger and receiver must have a sufficient cover with a dipping hole cut in it of the prescribed form and size.

4. If the Commissioners so direct, there must be two or more dipping holes in the cover of any spirit receiver or store cask or vat used in a distillery, at such places in the cover as they direct.

5. Each dipping hole in a spirit receiver, low wines or feints receiver or charger, store cask, or vat, must be secured and kept secured to the satisfaction of the officer.

6. No alteration must be made in the dipping hole or level of any vessel or utensil.

Eighth Part.

PROVISION AND SITUATION OF ARTICLES REQUIRED OR ALLOWED.

1. Every distiller must, at his own expense, and to the satisfaction of the Commissioners, provide, place, affix, and maintain each utensil and fitting allowed or required by this Act.

2. Every distiller must, to the satisfaction of the Commissioners, place and keep each vessel and utensil on his premises in a convenient situation, and so as to be easy of access to the officer.

Ninth Part.

CASKS.

Every distiller must legibly cut, brand, or paint with oil colour on the outside of both the ends of every moveable cask used in his premises for keeping or delivering spirits, and keep so cut, branded, or painted, his name, the name of the place where his stock is kept, and the number of gallons which the cask is capable of containing, and, if that number is less than eighty, the quarter or quarters of a *gallon of* capacity above the number of entire gallons.

Tenth Part.

MARKING UTENSILS AND ROOMS.

1. Every distiller must cause to be legibly painted with oil colour, and must keep so painted, on some conspicuous part of every vessel or utensil intended to be used by him in his business, and of the outside of the door of every room and place wherein any part of his business is to be carried on or any spirits are to be kept, the name of the vessel, utensil, room, or place, according to the purpose for which it is intended.

2. Where more than one vessel, utensil, room, or place is used for the same purpose all such vessels, utensils, rooms, or places must be marked by progressive numbers.

Eleventh Part.

COURSE OF WASH, LOW WINES, FEINTS, AND SPIRITS.

1. All wash must be fermented in the fermenting backs, and thence conveyed directly into the wash charger, and thence into the still for distillation.

2. All low wines, feints, and spirits running from the worm of the still must run thence directly into the safe at the end of the worm.

3. All low wines must be conveyed directly from the safe into the low wines receiver, and thence directly into the low wines and feints charger, and thence directly into the low wines still for re-distillation.

4. All spirits must be conveyed directly from the safe into the feints receiver or spirit receiver.

5. All spirits conveyed into the feints receiver must be conveyed thence directly into the low wines and feints charger or wash charger or intermediate still charger, and thence directly into the still for re-distillation.

6. No spirits conveyed into the spirit receiver may be re-distilled or may be removed therefrom except into the distiller's spirit store.

7. All spirits distilled in the distillery must, after the officer has taken an account of their quantity and strength, be forthwith conveyed through a close metal pipe from the spirit receiver into the store cask or vat in the spirit store.

8. Except after notice to, or in the presence of, an officer, access may not be had to the end of the worm of any still, or to any low wines, feints, or spirits, from the time of the extraction or distillation thereof in the still until they are taken account of by the officer in the proper receiver, or to any spirits in a store cask or vat.

A. D. 1880.

SECOND SCHEDULE.

TABLE A.—*Table to be used in determining the original specific gravity of wort or wash.*

Degrees of spirit indication.	Degrees of original specific gravity.	Degrees of spirit indication.	Degrees of original specific gravity.	Degrees of spirit indication.	Degrees of original specific gravity.	Degrees of spirit indication.	Degrees of original specific gravity.
.1	.3	4.1	15.5	8.1	34.3	12.1	54.9
.2	.6	4.2	16.0	8.2	34.8	12.2	55.4
.3	.9	4.3	16.4	8.3	35.4	12.3	55.9
.4	1.2	4.4	16.8	8.4	35.9	12.4	56.4
.5	1.5	4.5	17.3	8.5	36.5	12.5	56.9
.6	1.8	4.6	17.7	8.6	37.0	12.6	57.4
.7	3.1	4.7	18.2	8.7	37.5	12.7	57.9
.8	2.4	4.8	18.6	8.8	38.0	12.8	58.4
.9	2.7	4.9	19.1	8.9	38.6	12.9	58.9
1.0	3.0	5.0	19.5	9.0	39.1	13.0	59.4
1.1	3.3	5.1	19.9	9.1	39.7	13.1	60.0
1.2	3.7	5.2	20.4	9.2	40.2	13.2	60.5
1.3	4.1	5.3	20.9	9.3	40.7	13.3	61.1
1.4	4.4	5.4	21.3	9.4	41.2	13.4	61.6
1.5	4.8	5.5	21.8	9.5	41.7	13.5	62.2
1.6	5.1	5.6	22.2	9.6	42.2	13.6	62.7
1.7	5.5	5.7	22.7	9.7	42.7	13.7	63.3
1.8	5.9	5.8	23.1	9.8	43.2	13.8	63.8
1.9	6.2	5.9	23.6	9.9	43.7	13.9	64.3
2.0	6.6	6.0	24.1	10.0	44.2	14.0	64.8
2.1	7.0	6.1	24.6	10.1	44.7	14.1	65.4
2.2	7.4	6.2	25.0	10.2	45.1	14.2	65.9
2.3	7.8	6.3	25.5	10.3	45.6	14.3	66.5
2.4	8.2	6.4	26.0	10.4	46.0	14.4	67.1
2.5	8.6	6.5	26.4	10.5	46.5	14.5	67.6
2.6	9.0	6.6	26.9	10.6	47.0	14.6	68.2
2.7	9.4	6.7	27.4	10.7	47.5	14.7	68.7
2.8	9.8	6.8	27.8	10.8	48.0	14.8	69.4
2.9	10.2	6.9	28.3	10.9	48.5	14.9	69.9
3.0	10.7	7.0	28.8	11.0	49.0	15.0	70.5
3.1	11.1	7.1	29.2	11.1	49.6	15.1	71.1
3.2	11.5	7.2	29.7	11.2	50.1	15.2	71.7
3.3	12.0	7.3	30.2	11.3	50.6	15.3	72.3
3.4	12.4	7.4	30.7	11.4	51.2	15.4	72.9
3.5	12.9	7.5	31.2	11.5	51.7	15.5	73.5
3.6	13.3	7.6	31.7	11.6	52.2	15.6	74.1
3.7	13.8	7.7	32.2	11.7	52.7	15.7	74.7
3.8	14.2	7.8	32.7	11.8	53.3	15.8	75.3
3.9	14.7	7.9	33.2	11.9	53.8	15.9	75.9
4.0	15.1	8.0	33.7	12.0	54.3	16.0	76.5

TABLE B.—*Table for determining the weight per gallon of spirits by Sykes's hydrometer.*

1. Spirits on which Sykes's hydrometer indicates a number in column A must be taken to be of the weight per gallon in pounds and decimal parts of a pound of spirits indicated by the corresponding number in column B.

2. To ascertain the quantity of spirits in cask, their net weight must be divided by the number which in column B indicates their weight per gallon, and the product will be the quantity of the spirits in gallons and decimal parts of gallon.

Column A. Indication on Sykes's hydrometer.	Column B. Weight per gallon.	Column A. Indication on Sykes's hydrometer.	Column B. Weight per gallon.	Column A. Indication on Sykes's hydrometer.	Column B. Weight per gallon.	Column A. Indication on Sykes's hydrometer.	Column B. Weight per gallon.
	8.154	4	8.382	8	8.614	2	8.853
	8.157	6	8.385	27	8.617	4	8.856
	8.161	8	8.389	2	8.620	6	8.860
	8.164	14	8.392	4	8.624	8	9.863
	8.168	2	8.395	6	8.628	41	8.867
	8.171	4	8.399	8	8.631	2	8.871
	8.174	6	8.402	28	8.635	4	8.874
	8.178	8	8.406	2	8.639	6	8.878
	8.181	15	8.409	4	8.642	8	8.881
	8.185	2	8.412	6	8.646	42	8.885
	8.188	4	8.416	8	8.649	2	8.889
	8.191	6	8.419	29	8.653	4	8.892
	8.195	8	8.423	2	8.656	6	8.896
	8.198	16	8.426	4	8.660	8	8.899
	8.202	2	8.429	6	8.663	43	8.903
	8.205	4	8.433	8	8.667	2	8.907
	8.208	6	8.436	30	8.670	4	8.911
	8.212	8	8.440	2	8.674	6	8.914
	8.215	17	8.443	4	8.677	8	8.918
	8.219	2	8.446	6	8.681	44	8.922
	8.222	4	8.450	8	8.684	2	8.926
	8.225	6	8.453	31	8.688	4	8.929
	8.229	8	8.457	2	8.692	6	8.633
	8.232	18	8.460	4	8.695	8	8.936
	8.236	2	8.464	6	8.699	45	8.940
	8.239	4	8.467	8	8.702	2	8.944
	8.242	6	8.471	32	8.706	4	8.947
	8.245	8	8.474	2	8.709	6	8.951
	8.249	19	8.478	4	8.713	8	8.954
	8.252	2	8.481	6	8.716	46	8.95
	8.255	4	8.485	8	8.720	2	8.962
	8.258	6	8.488	33	8.723	4	8.965
	8.262	8	8.492	2	8.727	6	8.969
	8.265	20	8.495	4	8.730	8	8.972
	8.269	2	8.498	6	8.734	47	8.976
	8.272	4	8.502	8	8.737	2	8.980
	8.275	6	8.505	34	8.741	4	8.984
	8.279	8	8.509	2	8.745	6	8.987
	8.282	21	8.512	4	8.748	8	8.991
	8.286	2	8.516	6	8.752	48	8.995
	8.280	4	8.519	8	8.755	2	8.999
	8.292	6	8.523	35	8.759	4	9.002
	8.296	8	8.526	2	8.763	6	9.006
	8.299	22	8.530	4	8.766	8	9.009
	8.303	2	8.533	6	8.770	49	9.013
	8.306	4	8.537	8	8.773	2	9.017
	8.309	6	8.540	36	8.777	4	9.021
	8.313	8	8.544	2	8.781	6	9.024
	8.316	23	8.547	4	8.784	8	9.028
	8.320	2	8.551	6	8.788	50	9.032
	8.323	4	8.554	8	8.791	2	9.036
	8.326	6	8.558	37	8.795	4	9.039
	8.330	8	8.561	2	8.799	6	9.043
	8.333	24	8.565	4	8.802	8	9.046
	8.337	2	8.568	6	8.806	51	9.050
	8.340	4	8.572	8	8.809	2	9.054
	8.343	6	8.575	38	8.813	4	9.058
	8.347	8	8.579	2	8.817	6	9.061
	8.350	25	8.582	4	8.820	8	9.065
	8.354	2	8.586	6	8.824	52	9.069
	8.357	4	8.589	8	8.327	2	9.073
	8.361	6	8.593	39	8.831	4	9.076
	8.364	8	8.596	2	8.835	6	9.080
	8.368	26	8.600	4	8.838	8	9.083
	8.371	2	8.603	6	8.842	53	9.087
	8.375	4	8.607	8	8.845	2	9.091
	8.378	6	8.610	40	8.849	4	9.095

TABLE B.—*Table for determining the weight per gallon of spirits by Sykes's hydrometer*—Continued.

Column A. Indication on Sykes's hydrometer.	Column B. Weight per gallon.	Column A. Indication on Sykes's hydrometer.	Column B. Weight per gallon.	Column A. Indication on Sykes's hydrometer.	Column B. Weight per gallon.	Column A. Indication on Sykes's hydrometer.	Column B. Weight per gallon.
6	9.098	4	9.321	77	9.545	6	9.773
8	9.102	6	9.324	2	9.549	8	9.777
54	9.106	8	9.328	4	9.553	89	9.781
2	9.110	66	9.332	6	9.557	2	9.785
4	9.114	2	9.336	8	9.561	4	9.789
6	9.117	4	9.340	78	9.565	6	9.792
8	9.121	6	9.344	2	9.569	8	9.796
55	9.125	8	9.348	4	9.573	90	9.800
2	9.129	67	9.352	6	9.576	2	9.804
4	9.132	2	9.356	8	9.580	4	9.808
6	9.136	4	9.360	79	9.584	6	9.812
8	9.139	6	9.363	2	9.588	8	9.816
56	9.143	8	9.367	4	9.592	91	9.820
2	9.147	68	9.371	6	9.596	2	9.824
4	9.151	2	9.375	8	9.600	4	9.828
6	9.154	4	9.379	80	9.604	6	9.832
8	9.158	6	9.382	2	9.608	8	9.836
57	9.162	8	9.386	4	9.612	92	9.840
2	9.166	69	9.390	6	9.615	2	9.844
4	9.170	2	9.394	8	9.619	4	9.848
6	9.173	4	9.398	81	9.623	6	9.852
8	9.177	6	9.401	2	9.627	8	9.856
58	9.181	8	9.405	4	9.631	93	9.860
2	9.185	70	9.409	6	9.635	2	9.864
4	9.189	2	9.413	8	9.639	4	9.868
6	9.192	4	9.417	82	9.643	6	9.872
8	9.196	6	9.420	2	9.647	8	9.876
59	9.200	8	9.424	4	9.651	94	9.880
2	9.204	71	9.428	6	9.655	2	9.884
4	9.207	2	9.432	8	9.659	4	9.888
6	9.211	4	9.436	83	9.663	6	9.892
8	9.214	6	9.440	2	9.667	8	9.896
60	9.218	8	9.444	4	9.671	95	9.900
2	9.222	72	9.448	6	9.674	2	9.904
4	9.226	2	9.452	8	9.678	4	9.908
6	8.229	4	9.456	84	9.682	6	9.913
8	9.233	6	9.459	2	9.686	8	9.917
61	9.237	8	9.463	4	9.690	96	9.921
2	9.241	73	9.467	6	9.694	2	9.925
4	9.245	2	9.471	8	9.698	4	9.929
6	9.248	4	9.475	85	9.702	6	9.934
8	9.252	6	9.479	2	9.706	8	9.938
62	9.256	8	9.483	4	9.710	97	9.942
2	9.260	74	9.487	6	9.714	2	9.946
4	9.264	2	9.491	8	9.718	4	9.950
6	9.267	4	9.495	86	9.722	6	9.955
8	9.271	6	9.498	2	9.726	8	9.959
63	9.275	8	9.502	4	9.730	98	9.963
2	9.279	75	9.506	6	9.733	2	9.967
4	9.283	2	9.510	8	9.737	4	9.972
6	9.286	4	9.514	87	9.741	6	9.976
8	9.290	6	9.517	2	9.745	8	9.981
64	9.294	8	9.521	4	9.749	99	9.985
2	9.298	76	9.525	6	9.753	2	9.989
4	9.302	2	9.529	8	9.757	4	9.994
6	9.305	4	9.533	88	9.761	6	9.998
8	9.309	6	9.537	2	9.765	8	10.003
65	9.313	8	9.541	4	9.769	100	10.007
2	9.317						

THIRD SCHEDULE. A.D. 1880.

Rules with respect to Rectifiers.

FIRST PART.

1. A rectifier may not have any opening, fixed pipe, or conveyance leading to or from a still used by him, except one charging pipe leading to the still, and the discharge cock and the head of the still terminating in the worm.

2. A rectifier must permit the charge and discharge cock of every still used by him to be secured by the officer, and kept so secured whilst the still is at work.

SECOND PART.

1. The discharge cock of every still used by a rectifier must be so placed that the officer may have convenient access thereto, and for this purpose must be continued in a straight line from the body of the still, and must not project more than three feet therefrom.

2. A rectifier must, before beginning to draw off spirits from a still, charge the still with a quantity of liquor, in the proportion of not less than seven parts in ten of the whole quantity which the still, including the head, is capable of containing, and must keep the still so charged until he begins to draw off spirits therefrom.

3. Every still must be worked off within sixteen hours from the time of the officer's taking the gauge thereof.

4. A rectifier must, as soon as his still has been worked off, remove the head therefrom, unless it is permanently fixed to the body of the still, and the head so removed must not be replaced until the still is again charged and ready to be worked.

5. A rectifier must not allow his still to be worked until the officer has examined the quality of the spirits therein.

THIRD PART.

1. When a rectifier desires to have the furnace door or steam pipe of a still unlocked, he must give the officer not less than twelve hours' previous written notice, specifying the still, and the day and hour when he wishes to have the door or pipe unlocked.

2. The officer shall attend at the time so specified, or within one hour thereafter.

3. The officer must not open the door or pipe until the still has been fully charged, and until he has examined its contents and seen the head of the still put on and ready to be locked down.

4. The officer shall not be bound to remain for this purpose more than one hour at any one time, and if within one hour after his arrival the still is not charged, and its head ready to be locked down, another notice shall be requisite.

5. Whenever any vessel, utensil, cock, pipe, pump, or other article on the premises of a rectifier which is required by law to be locked and secured has to be opened for the purpose of any cleaning, repair, or improvement, the officer

shall, on receiving a written request for that purpose, open the same, and keep it open whilst the work is in progress. He must close every such vessel or article every evening as soon as the work is finished for the day, but must attend to open it at six o'clock every morning until the work is completed.

FOURTH PART.

Where the strength of any spirits forming part of the stock of a rectifier, by reason of their being compounded with other substances, cannot be ascertained by Sykes's hydrometer, he must, on request by an officer, cause the true quantity and strength of the spirits to be legibly marked on the outside of the cask or vessel containing the same, and to be kept so marked until the spirits are removed therefrom.

FOURTH SCHEDULE.

PARTICULARS TO BE SPECIFIED IN REQUEST NOTE FOR PERMIT.

Quantity and strength of spirits for which the permit is required.
Casks or other vessels in which the spirits are contained.
From whom and whence the spirits are to be sent.
To whom and whither the spirits are to be sent.
Mode of conveyance.

PARTICULARS TO BE SPECIFIED IN CERTIFICATE.

Quantity, denomination, and strength of spirits sent out or delivered.
Number of casks or packages in which the spirits are contained.
Day and hour of sending out or delivery.
From whom and whence sent or delivered.
To whom and whither sent or delivered.
Mode of conveyance.

PARTICULARS TO BE ENTERED IN STOCK BOOK.

On receipt.

Quantity, denomination, strength and gallons computed at proof of spirits received.
Date of receipt.
From whom and whence received.

On sending out or delivery.

Quantity, denomination, strength and gallons computed at proof of spirits sent or delivered.
Date of sending out or delivery.
To whom or whither sent or delivered.

FIFTH SCHEDULE.

Enactments repealed.

Session and chapter.	Title of act.	Extent of repeal.
10 Will. 3. c. 4	An Act to prohibit the excessive distilling of spirits and low wines from corn, and against the exporting of beer and ale, and to prevent frauds or distillers.	Sections five and eight.
30 Geo. 3. c. 38	An Act for repealing the duties upon licences for retailing wine and sweets and upon licences for retailing distilled spirituous liquors, and for granting other duties in lieu thereof.	Section fifteen.
4 Geo. 4. c. 94	An Act to grant certain duties of Excise upon spirits distilled from corn or grain in Scotland and Ireland, and upon licences for stills for making such spirits; and to provide for the better collecting and securing such duties, and for the warehousing of such spirits without payment of duty.	The whole Act.
6 Geo. 4. c. 80	An Act to repeal the duties payable in respect of spirits distilled in England, and of licences for distilling, rectifying, or compounding such spirits, and for the sale of spirits, and to impose other duties in lieu thereof; and to provide other regulations for the collection of the said duties, and for the sale of spirits, and for the warehousing of such spirits without payment of duty, for exportation.	Section one hundred and forty-five.
18 & 19 Vict. c. 38	An Act to allow spirit of wine to be used duty free in the arts and manufactures of the United Kingdom.	The whole Act except section three.
18 & 19 Vict. c. 94	An Act to impose increased rates of duty of Excise on spirits distilled in the United Kingdom, to allow malt, sugar, and molasses to be used duty free in the distilling of spirits, in lieu of allowances and drawbacks on such spirits, sugar, and molasses respectively; and to amend the laws relating to the duties of excise.	Section fourteen, in part, namely, the words "and all malt "to be used in the "distillery shall be "ground by metal "rollers only."
23 & 24 Vict. c. 114	An Act to reduce into one Act and to amend the excise regulations relating to the distilling, rectifying, and dealing in spirits.	The whole Act.
24 & 25 Vict. c. 21	An Act for granting to Her Majesty certain duties of Excise and stamps.	Section two in part, namely, from "and any licensed" to the end of the section.
24 & 25 Vict. c. 91	An Act to amend the laws relating to the Inland Revenue.	Sections three, four, six, and twenty.
27 & 28 Vict. c. 12	An Act to amend the laws relating to the warehousing of British spirits.	The whole Act, except section twelve.
28 & 29 Vict. c. 96	An Act to amend the laws relating to the Inland Revenue.	Sections twenty-three, twenty-seven, twenty-eight, and twenty-nine.
28 & 29 Vict. c. 98	An Act to allow British compounded spirits to be warehoused upon drawback.	The whole Act, except section twelve.

Enactments repealed—Continued.

Session and chapter.	Title of act.	Extent of repeal.
29 & 30 Vict. c. 64	An Act to amend the laws relating to the Inland Revenue.	Sections seven, eight, and nine.
30 & 31 Vict. c. 27	An Act to allow warehoused British spirits to be bottled for home consumption.	The whole Act.
31 & 32 Vict. c. 124	An Act to amend the laws relating to the Inland Revenue.	Sections three, four, and five.
32 & 33 Vict. c. 103	An Act to amend the law relating to the warehousing of wines and spirits in Customs and Excise warehouses, and for other purposes relating to Customs and Inland Revenue.	Sections two, six, eight, twelve, and thirteen, and the other sections in Part I. (except section seven), so far as they relate to spirits, and sections fourteen and sixteen.
34 & 35 Vict. c. 103	An Act to amend the law relating to the Customs and Inland Revenue.	Sections twenty-one, twenty-two, and twenty-three.
37 & 38 Vict. c. 16.....	An Act to grant certain duties of Customs and Inland Revenue, to repeal and alter other duties, and to amend the laws relating to Customs and Inland Revenue.	Sections nineteen and twenty.
38 & 39 Vict. c. 23	An Act to grantcertain duties of Customs and Inland Revenue, to alter other duties, and to amend the laws relating to Customs and Inland Revenue.	Section ten.
39 & 40 Vict. c. 16	An Act to grant and alter certain duties of Customs and Inland Revenue, and to amend the laws relating to Customs and Inland Revenue.	Section three.
39 & 40 Vict. c. 35	An Act for consolidating the Duties of Customs.	Section three in part, namely, the words "or Inland Revenue," "or Excise," "respectively," and "or Inland Revenue respectively," Section four in part, namely, the words "or Inland Revenue" and "or Inland Revenue respectively."
40 & 41 Vict. c. 13	An Act to grant certain duties of Customs and Inland Revenue, and to amend the laws relating to Customs, Inland Revenue, and savings banks.	Section eleven.
41 & 42 Vict. c. 15	An Act to grant certain duties of Customs and Inland Revenue, to alter other duties, and to amend the laws relating to Customs and Inland Revenue.	Section twenty-four.

REVENUE ACT, 1889.

[52 & 53 Vict. Ch. 42.]

ARRANGEMENT OF SECTIONS.

PART I.

Customs.

Section.

1. Prohibition of importation of certain books and compressed tobacco.
2. Prohibition of importation of imitation coin.
3. Shippers of fuel to be used on board only, to be exporters within 44 & 45 Vict. c. 12.
4. Conveyance of explosives from Isle of Man to England, &c. to be deemed exportation and importation.
5. Repeal of certain words in 39 & 40 Vict. c. 36. s. 101, 47 & 48 Vict. c. 62. s. 2.
6. Dutiable matter not to be separated from other matter taken from warehouse as unfit for consumption.
7. Payment of rewards.
8. Substitution of 39 & 40 Vict. c. 36. ss. 165–167 for 16 & 17 Vict. c. 107. ss. 195–197.

PART II.

Taxes.

9. Consideration for redemption or purchase of land tax.
10. Rate of discount on pre-payment of income tax.
11. Partial repeal of 43 & 44 Vict. c. 19. s. 114.
12. Allowance of income tax, Schedule A. to friendly societies.
13. Amendment of law as to allowances to clerks to Commissioners of Taxes.
14. Proceedings against collectors and others in relation to taxes.

PART III.

Stamps.

15. Repeal of 52 & 53 Vict. c. 7. s. 18, and substitution of other provisions therefor.
16. Extension of exemption of coupons.
17. Duty of one penny upon a lease or tack in Scotland may be denoted by adhesive stamp.
18. Amendment of 46 & 47 Vict. c. 30. s. 7, as to shares in colonial registers.
19. Amendment of s. 11 of 47 & 48 Vict. c. 62.
20. Policies of insurance against accident: composition by agreement for stamp duty thereon.

PART IV.

Excise.

Section.
21. Payment of allowances on certain spirits under 48 & 49 Vict. c. 51. s. 3.
22. Fractions of a penny not to be charged upon excise licences.
23. Expiration of tobacco licences taken out by retailers of intoxicating liquors.
24. Penalty for contravention of terms of excise licence.
25. Amendment of 43 & 44 Vict. c. 24.
26. Prohibition of the sale of methylated spirits on Sunday.
27. Consolidation of law relating to licences for the manufacture and sale of methylated spirits.
28. Meaning of "sweets or made wines."
29. Consolidation of law as to use of unjust scales, &c.

PART V.

Miscellaneous.

30. Undisposed of residue of sailors effects.
31. Remission of fees payable to public department out of public money.
32. Accruer and payment of salaries, &c. charged on Consolidated Fund.
33. Explanation of law as to annuities under 28 & 29 Vict. c. 89.
34. Amendment of 29 & 30 Vict. c. 62. s. 15.
35. Definition of "Treasury."
36. Repeal.
37. Short title.
SCHEDULE.

A. D. 1889.

CHAPTER 42. An Act to amend the Law relating to the Customs and Inland Revenue, and for other purposes connected with the Public Revenue and Expenditure. [26th August 1889.]

Be it enacted by the Queen's most Excellent Majesty, by and with the advice and consent of the Lords Spiritual and Temporal, and Commons, in this present Parliament assembled, and by the authority of the same, as follows:

PART I.

Customs.

Prohibition of importation of certain books, and compressed tobacco.

1. The following goods shall from and after the passing of this Act, be included amongst the goods enumerated and described on the table of prohibitions and restrictions contained in section forty-two of the Customs Consolidation Act, 1876; namely,

49 & 50 Vict. c. 33.

Books, first published in any country or state other than the United Kingdom, wherein, under the International Copyright Act, 1886, or any other Act, or any Order in Council made under the authority of any Act, there is a subsisting copyright in the United Kingdom, printed or reprinted in any coun-

try or state other than the country or state in which they were first published, and as to which the owner of the copyright, or his agent in the United Kingdom, has given to the Commissioners of Customs in the manner prescribed by section forty-four of the Customs Consolidation Act, 1876, a notice in such form and giving such particulars as those Commissioners require, and accompanied by a declaration as provided in that section: 39 & 40 Vict. c. 36.

Tobacco cut and compressed by mechanical or other means.

Prohibition of importation of imitation coin.

2. (1.) It shall not be lawful to import or bring into the United Kingdom any imitation coin as defined by this Act, and any such imitation coin shall be included among the goods enumerated and described in the table of prohibitions and restrictions inwards contained in section forty-two of the Customs Consolidation Act, 1876, and the law relating to the Customs shall apply accordingly.

(2.) Provided that the Commissioners of Customs, acting under the direction of the Treasury, may permit the importation of any imitation coin in a particular instance if they are satisfied that such importation is for the purposes of knowledge or art, or any exhibition or collection, or for any lawful purpose, and that the imitation coin is not likely to circulate as current coin, or to be otherwise used for deceiving the public. 39 & 40 Vict. c. 36.

(3.) Each of the following articles, if not a British coin, shall be an imitation coin within the meaning of this Act, that is to say—

(*a.*) Any piece of gold, silver, copper, or bronze, or of metal or mixed metal, purporting to be a British coin or a token for British money, or bearing any word or device which indicates or may reasonably be taken to indicate that the holder thereof is entitled to demand any value in British money denoted thereon; and

(*b.*) Any medal, cast, coin, or other like thing made wholly or partially of metal or any metallic combination, and resembling in size, figure, and colour any British coin, or having thereon a device resembling any device on any British coin, or being so formed that it can, by gilding, silvering, colouring, washing, or other like process, be so dealt with as to resemble any British coin.

(4.) In this section the expression "British coin" means any coin coined in or for any of Her Majesty the Queen's mints or lawfully current by virtue of any proclamation or otherwise in any part of Her Majesty's dominions, whether within the United Kingdom or otherwise, and the expression "British money" means money expressed in the terms of any British coin.

Shippers of fuel to be used on board only, to be exporters within 44 & 45 Vict. c. 12.

3. Where a ship touching at a port in the United Kingdom for the purpose only of taking in coals or fuel for use, and proceeding on a voyage to a foreign port, is not, under the regulations of the Commissioners of Customs, required

to clear, every person who ships such coals or fuel shall, for the purposes of section eleven of the Customs and Inland Revenue Act, 1881, be deemed to be the exporter of the coals or fuel.

Provided that the period within which the specification mentioned in that section is required to be delivered shall, in the case of such coals or fuel, be reckoned from the time of shipment.

Conveyance of explosives from Isle of Man to England, &c., to be deemed exportation and importation. 38 & 39 Vict. c. 17. 46 & 47 Vict. c. 3.

4. The conveyance from the Isle of Man to any port in England, Scotland, or Ireland, of any explosives within the meaning of the Explosives Act, 1875, on the unloading or landing of which any restriction is imposed by or in pursuance of that Act, or of any explosive substance within the meaning of the Explosive Substances Act, 1883, which is liable to forfeiture under that Act, shall be deemed to be exportation from the Isle of Man and importation into that port, and all the provisions of the Customs Acts relating to the exportation and importation of goods shall apply accordingly.

Repeal of certain words in 39 & 40 Vict. c. 36. s. 101, 47 & 48 Vict. c. 62. s. 2.

5.—(1.) Section one hundred and one of the Customs Consolidation Act, 1876, is hereby repealed to the following extent, namely, the words "other than spirits or tobacco," the words "not having on board any drawback or other "goods liable to duties of Customs or Excise," and the words "not entitled to drawback or liable to duties of Cus-"toms or Excise."

(2.) Section two of the Revenue Act, 1884, is also hereby repealed to the following extent, namely, the words "not "entitled to any drawback, or liable to any duties of "Customs or Excise."

Dutiable matter not to be separated from other matter taken from warehouse as unfit for consumption.

6. Where any goods of a kind or description liable to a duty of Customs have been taken from a warehouse, either with or without the permission of an officer of Customs, as unfit for consumption, by reason of the mixture therewith of any other matter, any person who separates the goods from such other matter shall be deemed to be dealing with the goods with intent to defraud Her Majesty, and shall be liable to the penalties imposed by, and may be dealt with under, section one hundred and eighty-six of the Customs Consolidation Act, 1876.

Payment of rewards.

7. Section two hundred and fifteen of the Customs Consolidation Act, 1876, shall be read as if the following words were added thereto:—

And all moneys similarly payable to persons employed by or under the Post Office may be paid to the Postmaster-General, whose receipt shall be a sufficient discharge for the same, and who shall be at liberty to apply the same for the benefit of the officers of the Post Office, or any of them, as he may in his discretion deem best from time to time.

Substitution of 39 & 40 Vict. c. 36. ss. 165–167 for 16 & 17 Vict. c. 107. ss. 195–197.

8. References in any Act to sections one hundred and ninety-five, one hundred and ninety-six, and one hundred and ninety-seven of the Customs Consolidation Act, 1853, shall be construed as references to sections one hundred and sixty-five, one hundred and sixty-six, and one hundred and sixty-seven of the Customs Consolidation Act, 1876.

PART II.

Taxes.

Consideration for redemption or purchase of land tax.

9.—(1.) Where the consideration for the redemption or purchase of any land tax under the several Acts in force in that behalf is a sum of stock, the stock shall be Two and Three-quarters per Cent. Consolidated Stock; and where the consideration is a sum of money, that sum shall be the amount calculated and ascertained by reference to the price of such stock.

(2.) The tables annexed to any of the said Acts shall be construed as if for references therein to Three per cent. Bank Annuities were substituted references to Two and Three-quarters per Cent. Consolidated Stock, and any forms contained in, or prescribed by, any of the said Acts may be altered so as to give effect to this section.

Rate of discount on pre-payment of income tax.

10. The allowance to be made under section one hundred and forty-one of the Act of the session held in the fifth and sixth years of Her Majesty's reign, chapter thirty-five, shall be at the rate of two pounds ten shillings per centum per annum in lieu of the rate of four pounds per centum per annum.

Partial repeal of 43 & 44 Vict. c. 19. s. 114.

11. So much of section one hundred and fourteen of the Taxes Management Act, 1880, as allows a collector of land tax to retain any excess of or surplus land tax is hereby repealed.

Allowance of income tax, Schedule A. to friendly societies.

12. Any friendly society which is legally established under any Act of Parliament relating to friendly societies, and which does not assure or grant to any individual any sum or annuity to an amount which would debar that society from the benefit of the exemption granted to friendly societies by the Act of the session held in the fifth and sixth years of Her Majesty's reign, chapter thirty-five, in respect of their stocks, dividends, and interest chargeable under Schedule (C.) of the said Act shall, in addition to any exemption from income tax which the society may by law enjoy, be entitled to the like allowances in respect of any charge under Schedule (A.) to be made on the lands, tenements, hereditaments, or heritages belonging to the society as are granted to colleges and other properties mentioned in No. VI. of that schedule in section sixty-one of the said Act.

Amendment of law as to allowances to clerks to Commissioners of Taxes.

13. It shall be lawful for the Commissioners of Inland Revenue, with the consent of the Treasury, to grant, in addition to the allowances and remuneration payable to clerks to Commissioners of Income Tax and Inhabited House Duties by virtue of the Taxes Management Act, 1880, such further sums for expenses incurred other than necessary office expenses, and by way of additional remuneration as they may deem expedient.

Proceedings against collectors and others in relation to taxes.

14.—(1.) The provisions of the Taxes Management Act, 1880, shall not affect any prosecution on indictment or criminal letters for any felony or misdemeanour, provided that no person shall be proceeded against twice in respect of the same offence.

(2.) A collector of land tax, income tax, or inhabited house duties shall, for the purpose of any indictment or criminal letters for any felony or misdemeanour committed by him as such collector, be deemed to be employed in the public service of Her Majesty, and to be a clerk, officer, or servant of the Commissioners of Inland Revenue.

PART III.

Stamps.

Repeal of 52 & 53 Vict. c. 7. s. 18, and substitution of other provisions therefor.

15. Section eighteen of the Customs and Inland Revenue Act, 1889, is hereby repealed, and there shall be substituted therefor the following, which shall commence and take effect as from the date of the passing of that Act:—

(1.) Any contract or agreement made in England or Ireland under seal, or under hand only, or made in Scotland, with or without any clause of registration, for the sale of any equitable estate or interest in any property, or for the sale of any estate or interest in any property except lands, tenements, hereditaments, or heritages, or property locally situate out of the United Kingdom, or goods, wares, or merchandise, or stock, or marketable securities, or any ship or vessel, or part interest, share, or property of or in any ship or vessel, shall be charged with the same ad valorem duty, to be paid by the purchaser, as if it were an actual conveyance on sale of the estate, interest, or property agreed or contracted to be sold.

(2.) Where the purchaser has paid the said ad valorem duty, and before having obtained a conveyance or transfer of the property, enters into a contract or agreement for the sale of the same, the contract or agreement shall be charged, if the consideration for such sale is in excess of the consideration for the original sale, with the ad valorem duty payable in respect of such excess consideration, and in any other case with the fixed duty of ten shillings or of sixpence, as the case may require, according to the law in force prior to the passing of the Customs and Inland Revenue Act, 1889.

52 & 53 Vict. c. 7.

(3.) Where duty shall have been duly paid in conformity with the foregoing provisions, the conveyance or transfer made to the purchaser or sub-purchaser, or any other person on his behalf or by his direction, shall not be chargeable with any duty, and the Commissioners of Inland Revenue, upon application, either shall, under the provisions of section fourteen of the Stamp Act, 1870, denote the payment of the ad valorem duty upon the conveyance or transfer, or shall transfer the ad valorem duty thereto upon production of the contract or agreement, or contracts or agreements, duly stamped.

33 & 34 Vict. c. 97.

(4.) Provided that where any such contract or agreement is stamped with the fixed duty of ten shillings or of sixpence, as the case may require, according to the law in force prior to the passing of the Customs and Inland Revenue Act, 1889, the contract or agreement shall be regarded as duly stamped for the mere purpose of proceedings to enforce specific performance or recover damages for the breach thereof.

(5.) Provided also that where any such contract or agreement is stamped with the said fixed duty according to the law in force as aforesaid, and a conveyance or transfer made in conformity with the contract or agreement is presented to the said Commissioners for stamping with the ad valorem duty chargeable thereon under the said law within the period of six months after the first execution of the contract or agreement, or within such longer period as the said Commissioners may think reasonable in the circumstances of the case, the said conveyance or transfer shall be stamped accordingly, and the same, and the said contract or agreement, shall be deemed to be duly stamped. Nothing in this proviso shall alter or affect the provisions of the said law as to the stamping of a conveyance or transfer after the execution thereof.

(6.) Provided also, that the ad valorem duty paid upon any such contract or agreement for sale as aforesaid shall be returned by the said Commissioners in case the contract or agreement be afterwards rescinded or annulled, or for any other reason be not substantially performed or carried into effect, so as to operate as or be followed by a conveyance or transfer.

(7.) Words and expressions in this section shall have the like meaning and interpretation as in the Stamp Act, 1870.

Extension of exemption of coupons.

16. The exemption from Stamp Duty under the head "Bill of Exchange" in the schedule to the Stamp Act, 1870, of "Coupon or Warrant for Interest attached to and issued with any security," shall extend to a coupon or warrant for interest attached to and issued with any agreement or memorandum for the renewal or extension of time for payment of a security.

Duty of one penny upon a lease or tack in Scotland may be denoted by adhesive stamp.

17. The duty of one penny upon a lease or tack, or agreement for a lease or tack, in Scotland, of any dwelling-house or tenement, or part of a dwelling-house or tenement, for the definite term of a year at a rent not exceeding ten pounds per annum, or upon the duplicate or counterpart of any such instrument, may be denoted by an adhesive stamp which is to be cancelled by the person by whom the instrument is first executed.

Amendment of 46 & 47 Vict. c. 30. s. 7, as to shares in colonial registers.

18. Notwithstanding provision (*b*) in section seven of the Companies (Colonial Registers) Act, 1883, the share or other interest of a deceased member, registered in a Colonial register under that Act, who shall have died domiciled

elsewhere than in the United Kingdom, shall, so far as relates to British duties, not be deemed to be part of his estate and effects situated in the United Kingdom, for or in respect of which probate or letters of administration is or are to be granted, or whereof an inventory is to be exhibited and recorded.

Amendment of s. 11 of 47 & 48 Vict. c. 62.

19. The proviso to section eleven of the Revenue Act, 1884, is hereby repealed, and that section shall be read as if the following proviso were therein inserted in lieu of the repealed proviso:

Provided that where a policy of life assurance has been effected with any insurance company by a person who shall die domiciled elsewhere than in the United Kingdom, the production of a grant of representation from a court in the United Kingdom shall not be necessary to establish the right to receive the money payable in respect of such policy.

Policies of insurance against accident: composition by agreement for stamp duty thereon.

20. Whereas a practice has arisen of inserting in newspapers and other publications notices or advertisements which purport to insure the payment of money upon the death of the holder or bearer of the newspaper or publication containing the notice or advertisement only from accident or violence or otherwise than from a natural cause, and doubts have arisen as to the liability of such notices or advertisements to the stamp duty of one penny imposed by the Stamp Act, 1870, upon a policy of insurance for any payment agreed to be made upon the death of any person only from accident or violence or otherwise than from a natural cause, and it is expedient to remove such doubts and to make such provisions in relation to composition for the stamp duty as are in this section contained: Be it therefore enacted as follows:—

33 & 34 Vict. c. 97.

(*a.*) The expression "policy of insurance against accident" as used in this section means a policy of insurance for any payment agreed to be made upon the death of any person only from accident or violence or otherwise than from a natural cause, or as compensation for personal injury, and the term "policy" as defined in section one hundred and seventeen of the Stamp Act, 1870, shall be construed, in relation to a policy of insurance against accident, as including any notice or advertisement in a newspaper or other publication which purports to insure the payment of money upon the death of or injury to the holder or bearer of the newspaper or publication containing the notice only from accident or violence or otherwise than from a natural cause:

(*b.*) Where any person or body, corporate or unincorporate, issuing policies of insurance against accident, shall, in the opinion of the Commissioners of Inland Revenue, so carry on the business of such insurance as to render it impracticable or inexpedient to require that the stamp duty of one penny as imposed by the Stamp Act, 1870, be charged and paid upon the policies, it shall be

lawful for the said Commissioners to enter into an agreement with that person or body for the delivery to them of quarterly accounts of all sums received in respect of premiums on policies of insurance against accident, and the agreement shall be in such form and contain such terms and conditions as the said Commissioners may think proper:

(*c.*) After an agreement has been entered into between the said Commissioners and any person or body under the foregoing provision and during the period for which the agreement is in force, no policy of insurance against accident issued by that person or body shall be chargeable with any stamp duty, but in lieu of and by way of composition for such stamp duty there shall be charged on the aggregate amount of all sums received in respect of premiums on policies of insurance against accident a duty at the rate of five pounds per centum, which duty shall be a stamp duty and shall be under the care and management of the said Commissioners, who by themselves and their officers shall have the same powers and authorities for the collection, recovery, and management thereof as are now vested in them for the collection, recovery, and management of any stamp duties, and shall have all other powers and authorities requisite for such purposes:

(*d.*) The quarterly accounts to be delivered by or on behalf of any person or body to the said Commissioners shall be delivered within twenty days after the fifth day of April, the fifth day of July, the tenth day of October, and the fifth day of January in every year, and every account shall be a true and full account of all unstamped policies of insurance against accident issued by that person or body during the quarter of a year ending on any of the said days next preceding the delivery thereof, and of all sums of money received for or in respect of such policies so issued during that quarter, and of all sums of money received and not already accounted for in respect of any other unstamped policies of insurance against accident issued at any time before the commencement of that quarter:

(*e.*) The duty imposed by this section shall be paid on the delivery of the account, and unless then paid shall be a debt due to Her Majesty from the person or body by or on whose behalf the account is delivered:

(*f.*) In the case of wilful neglect to deliver such an account as is hereby required or to pay the duty in conformity with this section, the person or body shall be liable to pay to Her Majesty a sum equal to ten pounds per centum upon the

amount of duty payable, and a like penalty for every month after the first month during which the neglect continues.

PART IV.

Excise.

Payment of allowances on certain spirits under 48 & 49 Vict. c. 51. s. 3.

21. Notwithstanding anything to the contrary in section three of the Customs and Inland Revenue Act, 1885, the allowances payable under that section may, in the case of British compounded spirits of a strength exceeding eleven degrees over proof, and spirits of the nature of spirits of wine, be paid, on the production of a certificate from the proper officer of inland revenue or customs that the same have been deposited in an excise or customs warehouse, to the person in whose name they are warehoused; and any payment heretofore made on the deposit of such spirits shall be deemed to have been legally made in discharge of all claims to any allowance payable in respect thereof.

Fractions of a penny not to be charged upon excise licences.

22. In the case of payment by, or repayment to, any person in respect of duty upon an excise licence no fractional part of a penny shall be charged and paid or repaid.

Expiration of tobacco licences taken out by retailers of intoxicating liquors.

23.—(1.) Where any person carries on the trade of a dealer in or seller of tobacco in the same house or premises in which he also carries on the trade of a retailer of spirits, wine, beer, or sweets, the licence granted to him for the sale of tobacco shall expire on the day on which the licence granted to him for the sale of spirits, wine, beer, or sweets by law expires.

(2.) Where by reason of this section a licence for the sale of tobacco expires before the date at which it would otherwise have expired, a proportionate part of the duty shall be allowed.

Penalty for contravention of terms of excise licence.

24. If any person holding an excise licence for the sale of any article contravenes the terms of his licence, or sells otherwise than as he is authorised by the licence, he shall for such offence, if the same is not an offence for which any specific penalty is imposed by any excise Act, forfeit the penalty imposed by law upon a person dealing in or retailing or selling such article without having an excise licence in force authorising him to do so.

25. The Spirits Act, 1880, is hereby amended as follows:—

Amendment of 43 & 44 Vict. c. 24.

(*a.*) Sub-section two of section thirty-two shall be read as if the word "ten" were substituted therein for the word "eight."

(*b.*) Sub-section eight of section ninety-five shall be read as if the words "less five degrees" were not inserted therein.

(*c.*) Notwithstanding anything to the contrary contained in the said Act, any authorised methylator may supply methylated spirits to a person licensed to methylate.

Prohibition of the sale of methylated spirits on Sunday.

26. The sale of methylated spirits between the hours of ten of the clock in the evening of Saturday and eight of the clock on the following Monday morning is hereby pro-

hibited, and any person selling methylated spirits in contravention of this section shall for each offence, in addition to any other fine or penalty to which he may be liable, incur a fine of one hundred pounds.

Consolidation of law relating to licences for the manufacture and sale of methylated spirits.

27.—(1.) There shall continue to be paid for the use of Her Majesty, her heirs and successors, upon the licences herein-after mentioned to be taken out annually in the United Kingdom the following duties of excise:

	£	s.	d.
Upon a license to be taken out by a maker of methylated spirits (other than a distiller or rectifier of spirits)	10	10	0
Upon a licence to be taken out by a retailer of methylated spirits	0	10	0

(2.) Every such license shall be in such form as the Commissioners of Inland Revenue may direct, and shall expire on the thirtieth day of September in each year.

(3.) Every person who makes or sells methylated spirits without being duly licensed or authorised in that behalf shall, in addition to any other penalty or forfeiture, incur a fine of fifty pounds.

(4.) A licence to retail methylated spirits shall not be granted to a distiller or rectifier, or to a person licensed to retail beer, spirits, wine, or sweets for consumption upon his premises.

Meaning of "sweets or made wines."

28. In the construction of any enactment relating to the revenue of excise the expression "sweets or made wines" shall mean any liquor which is made from fruit and sugar or from fruit or sugar mixed with any other material, and which has undergone a process of fermentation in the manufacture thereof.

Consolidation of law as to use of unjust scales, &c.

29.—If any person exercising or carrying on a trade or business under or subject to any law of excise and required to keep scales or weights or measures,—

(*a.*) in the weighing of his stock or any goods, uses or suffers to be used any false, unjust, or insufficient scales, or weight, or measure with intent to defraud Her Majesty of any duty of excise; or

(*b.*) before or after the weighing of his stock or any goods puts or suffers to be put any other substance thereto, whereby any officer of inland revenue may be hindered or prevented from taking a just and true account;

he shall for every such offence incur a fine of one hundred pounds, and the false, unjust, or insufficient scales, and weights, and measures, shall be forfeited.

PART V.

Miscellaneous.

Undisposed of residue of sailors effects.

30.—(1.) If in any case the residue or any part thereof of the estate or effects of a deceased officer, seaman, or marine, having been received by the Admiralty, remains undisposed of or unappropriated for a period of six years and-a-half from the date of the receipt by the Admiralty of notice of the death, the Admiralty shall, as soon as

may be after the expiration of that period, pay or credit the said residue or part to the Greenwich Hospital capital account. Provided that this section shall not apply to any sums received by the Admiralty before the first day of April one thousand eight hundred and seventy-three, and that the application under this section of any residue, or part of a residue, shall not bar any subsequent claim of any person to the same.

28 & 29 Vict. c. 111.

(2.) This section shall be construed as part of the Navy and Marines (Property of Deceased) Act, 1865.

Remission of fees payable to public department out of public money.

31.—(1.) Any fee leviable in any public office which would, if levied, be payable out of money provided by Parliament shall, if the Treasury so direct, be remitted.

42 & 43 Vict. c. 58.

(2.) This section shall apply to all fees, per-centages, and other sums to which the Public Offices (Fees) Act, 1879, for the time being applies.

Accrue and payment of salaries, &c. charged on Consolidated Fund.

32. All salaries, pensions, compensation allowances, and other allowances which are chargeable on the Consolidated Fund of the United Kingdom and are payable at quarterly periods shall accrue due from day to day, and shall be payable on such quarterly days as may be from time to time determined by the Treasury.

Explanation of law as to annuities under 28 & 29 Vict. c. 89.

33. Whereas by section nineteen of the Greenwich Hospital Act, 1865, it is enacted that where any commissioner, officer, clerk, or person, while in receipt of an annuity provided in accordance with that Act, is appointed to any office under the Crown or under the Admiralty, then, if the annuity is equal to or greater than the annual emoluments of the office to which he is appointed, the annuity shall be received by him in full discharge of those emoluments, and if the annuity is less than those emoluments, the amount of the annuity shall be received by him in discharge of an equal amount of those emoluments, and doubts have been entertained as to the meaning of this enactment; it is hereby declared that the said annuity shall be received in discharge only of the sum, if any, by which the annuity, together with the annual emoluments of the new office, exceeds the emoluments of the office in respect of which the annuity was granted.

Amendment of 29 & 30 Vict. c. 62. s. 15.

34. Section fifteen of the Crown Lands Act, 1866, shall have effect as if any reference to the payments to the perpetual curate of the Isle of Alderney were omitted from the warrant issued under that section.

Definition of "Treasury."

35. In this Act "the Treasury" means the Commissioners of Her Majesty's Treasury.

Repeal.

36. The Acts specified in the Schedule to this Act are hereby repealed to the extent specified in the third column of that schedule.

Provided that this repeal shall not affect—

(*a.*) any liability, penalty, forfeiture, or punishment incurred in respect of any offence committed against any enactment hereby repealed; or

(*b.*) the exercise of any power or the commencement or continuance of any legal proceeding or remedy in respect of any such liability, penalty, forfeiture, or punishment.

Short title.

37. This Act may be cited as the Revenue Act, 1889.

SCHEDULE.

Enactments repealed.

Session and Chapter.	Title.	Extent of Repeal.
10 Geo. 3. c. 44	An Act for more effectually preventing traders in exciseable commodities from using false weights and scales.	The whole Act.
26 Geo. 3. c. 77	An Act for the amendment of several laws relating to the duties under the management of the Commissioners of Excise.	In part, namely, except section twelve.
28 Geo. 3. c. 37	An Act for amending several laws relative to the revenue of excise.	The whole Act.
4 & 5 Will. 4. c. 77	An Act for repealing the duties on starch, stone bottles, sweets or made wines, mead or metheglin, and on scaleboard made from wood.	The whole Act.
18 & 19 Vict. c. 38	An Act to allow spirit of wine to be used duty free in the arts and manufactures of the United Kingdom.	The whole Act.
23 & 24 Vict. c. 113	An Act to grant duties of Excise on chicory and on licences to dealers in sweets or made wines; also to reduce the Excise duty on hops and the period of credit allowed for payment of the duty on malt and hops respectively; to repeal the exemption from licence duty of persons dealing in foreign wine and spirits in bond; and to amend the laws relating to the Excise.	In part namely, section twenty-one, from "sweets or made wines" to "wines."
24 & 25 Vict. c. 91	An Act to amend the laws relating to the Inland Revenue.	In part namely, sections one, two, and five.
26 & 27 Vict. c. 33	An Act for granting to Her Majesty certain duties of Inland Revenue and to amend the laws relating to the Inland Revenue.	In part namely section twenty-five.
27 & 28 Vict. c. 56	An Act for granting to Her Majesty certain stamp duties and to amend the laws relating to the Inland Revenue.	In part namely, sections twelve and thirteen.
30 & 31 Vict. c. 90	An Act to alter certain duties and to amend the laws relating to the Inland Revenue.	In part namely, section eighteen.

CUSTOMS AND INLAND REVENUE ACT, 1890.

[53 Vict. Ch. 8.]

ARRANGEMENT OF SECTIONS.

Section.

A. D. 1890. 1. Short title.

PART I.

Customs and Excise.

2. Import duty on tea.
3. Reduction of duty on currants.
4. Additional duty of Customs on spirits.
5. Alteration of Customs duties on certain goods containing spirits.
6. Additional duty of excise on spirits.
7. Payment of local taxation (Customs and Excise) duties to local taxation accounts of England, Scotland, and Ireland.
8. Wine may be made sparkling in warehouse and bottled subject to duty imposed on imported sparkling wine by 51 & 52 Vict. c. 14.
9. Excise licence to apply to one set of premises only.

PART II.

Repeal of Duties on Plate, and Provisions as to Silver Plate in Stock.

10. Repeal of duties on plate.
11. Allowance in respect of plate of silver.
12. Rules to be observed by trader on claiming allowance.
13. Mode of payment of allowance.
14. Officer may enter premises of trader.
15. Traders who have sold plate as duty paid to deduct or repay the allowance.
16. Power to close assay offices.
17. Saving clause.

PART III.

Stamps.

18. Construction of 51 & 52 Vict. c. 8, s. 12.
19. Reduction of duty on certain apprenticeship indentures.
20. Duty on sickness policies.
21. Exemption of revenue remittance bills.

PART IV.

Taxes.

22. Grant of duties of income tax.
23. Relief to trading or professional persons and farmers in case of losses.
24. Assessments on estate of deceased persons.
25. Inhabited house duty reduced as respects houses of small annual value.
26. Reduction of inhabited house duty in the case of lodging-houses and exemption of houses for artizans dwellings.
27. Amendment of s. 6 of 47 & 48 Vict. c. 62. Inns of Court. Lambeth.
28. Assessment of Universities of Oxford and Cambridge.
29. Assessment of income tax under Schedules (A.) and (B.) and of the inhabited house duties for the year 1890–91.
30. Provisions of Income Tax Acts to apply to duties to be granted for succeeding year.

PART V.

Methylated Spirits.

31. Exemption of methylated spirits from duty.
32. Amendment of 43 & 44 Vict. c. 24.
33. Penalty for breach of regulations.
34. Customs provisions.
35. Construction of part.
36. Repeal of enactments.
SCHEDULES.

CHAPTER 8.—AN ACT to grant certain Duties of Customs and Inland Revenue, to repeal and alter other Duties, and to amend the Laws relating to Customs and Inland Revenue. [9th June 1890.] A. D. 1890.

Most Gracious Sovereign,

We, Your Majesty's most dutiful and loyal subjects, the Commons of the United Kingdom of Great Britain and Ireland in Parliament assembled, towards raising the necessary supplies to defray Your Majesty's public expenses and making an addition to the public revenue, have freely and voluntarily resolved to give and grant unto Your Majesty the several duties hereinafter mentioned; and do therefore most humbly beseech Your Majesty that it may be enacted, and be it enacted by the Queen's most Excellent Majesty, by and with the advice and consent of the Lords Spiritual and Temporal, and Commons, in this present Parliament assembled, and by the authority of the same, as follows:

1. This Act may be cited as the Customs and Inland Revenue Act, 1890. Short title.

PART I.

Customs and Excise.

Import duty on tea.

2. In lieu of the duty of Customs now chargeable upon tea there shall be charged and paid, on and after the first day of May one thousand eight hundred and ninety, the duty following; and such duty shall continue to be charged and paid on tea imported into Great Britain and Ireland until the first day of August one thousand eight hundred and ninety-one; (that is to say,)

Tea, the pound ..... Fourpence.

Reduction of duty on currants

3. In lieu of the duty of Customs now chargeable upon currants, there shall, on and after the first day of May one thousand eight hundred and ninety, be charged and paid upon currants imported into Great Britain and Ireland the duty following; (that is to say,)

	s.	d.
Currants, the cwt.	2	0

Additional duty of Customs on spirits. 44 & 45 Vict. c. 12.

4. In addition to the duties of Customs payable on spirits under the Customs and Inland Revenue Act, 1881, there shall be charged and paid, on and after the eighteenth day of April one thousand eight hundred and ninety, the duties following; (that is to say,)

	£	s.	d.
For every gallon computed at proof of spirits of any description as in the said Act mentioned (except perfumed spirits)	0	0	6
For every gallon of perfumed spirits	0	0	9
For every gallon of liqueurs, cordials, and other preparations entered so as to be chargeable under the said Act with the duty of fourteen shillings	0	0	8

and so in proportion for any less quantity.

Alteration of Customs duties on certain goods containing spirits.

5. In lieu of the duties of Customs on the articles hereinafter mentioned, being articles of which spirits are a part or ingredient, there shall be charged and paid, on and after the eighteenth day of April one thousand eight hundred and ninety, the duties following; (that is to say,)

		£.	s.	d.
Chloroform	the pound..	0	3	1
Collodion	the gallon..	1	5	0
Ether, acetic	the pound..	0	1	10
Ether, butyric	the gallon..	0	15	8
Ether, sulphuric	the gallon..	1	6	2
Ethyl, Iodide of	the gallon..	0	13	7

and so in proportion for any less quantity.

Additional duty of excise on spirits.

6. In addition to the duty of excise payable under the Act of the twenty-third and twenty-fourth years of Her Majesty's reign chapter one hundred and twenty-nine, for and upon every gallon computed at proof of spirits distilled in the United Kingdom there shall be charged and paid, on and after the eighteenth day of April one thousand eight hundred and ninety, the duty of sixpence, and so in proportion for any less quantity.

7. The following duties of Excise and of Customs, that is to say,—

(*a*) the additional duties on spirits imposed by this Act; and

(*b*) such portion of the duties of Excise and of Customs imposed by section eleven of the Inland Revenue Act, 1880, and section three of the Customs and Inland Revenue Act, 1881, as amended by section three of the Customs and Inland Revenue Act, 1889, in respect of beer, as equals threepence for every thirty-six gallons,

shall be called the local taxation (Customs and Excise) duties, and the proceeds of those duties shall be divided between England, Scotland, and Ireland in the same proportions, and be paid to the same local taxation accounts, and in the like manner and subject to the like regulations of the Treasury, and shall be ascertained as to proportion and otherwise in like manner as the one-half of the proceeds of the probate duties applicable to local purposes is now by law divided, paid, and ascertained, and the proceeds so paid shall be appropriated as Parliament may hereafter direct by any Act passed in the present session.

Payment of local taxation (Customs and Excise) duties to local taxation accounts of England, Scotland, and Ireland.

43 & 44 Vict. c. 20. 44 & 45 Vict. c. 12. 52 & 53 Vict. c. 7.

8.—(1.) With the sanction of the Commissioners of Customs, and after such notice and at such times and under such regulations and restrictions as they may prescribe, it shall be lawful in the warehouse to render wine sparkling or effervescent by aeration or other approved process, and to bottle the same in imperial or reputed quart or pint bottles.

Wine may be made sparkling in warehouse and bottled subject to duty imposed on imported sparkling wine by 51 & 52 Vict. c. 14.

(2.) For the purposes of the Customs (Wine Duty) Act, 1888, wine rendered sparkling or effervescent and bottled in the warehouse shall be deemed to be sparkling wine imported in bottle, and upon delivery for home consumption shall be charged with the duty imposed on sparkling wine by the said Act, and the time when the wine is entered for home consumption shall be deemed to be the time of importation.

(3.) It shall not be lawful to render any imported wine sparkling or effervescent, whether by aeration, fermentation, or any other process, except as provided by this section; and every person who contravenes this enactment, or who aids or is concerned in its contravention, shall be deemed to be knowingly dealing with goods with intent to evade a prohibition or restriction of or applicable thereto, and shall be liable accordingly to the penalties imposed by section one hundred and eighty-six of the Customs Consolidation Act, 1876; and all wine rendered or being rendered sparkling or effervescent contrary to this section by any process shall be forfeited, together with all machinery, utensils, bottles, and materials used or intended to be used in such process.

39 & 40 Vict. c. 36.

(4.) This section shall be read as if it were part of the Customs Consolidation Act, 1876.

9. Every excise licence to carry on any trade or business (except the trade or business of an appraiser, auctioneer, or hawker) which shall hereafter be granted, shall only

Excise licence to apply to one set of premises only.

authorise the person to whom the licence is granted to carry on the trade or business mentioned therein in one set of premises to be specified in the licence.

PART II.

Repeal of Duties on Plate, and Provisions as to Silver Plate in Stock.

Repeal of duties on plate.

10. On and after the first day of May one thousand eight hundred and ninety, the stamp duties and duties of Customs on plate of gold and plate of silver shall cease to be payable, and the drawback upon the exportation of plate shall cease to be allowed.

Allowance in respect of plate of silver.

11.—(1.) An allowance by way of drawback according to weight shall be paid out of the Consolidated Fund or the growing produce thereof to every licensed dealer in plate who has on or before the seventh day of May one thousand eight hundred and ninety, given notice to the Commissioners of Inland Revenue in a form provided by them of his intention to claim the allowance in respect of articles of plate of silver manufactured in the United Kingdom which have not left the stock of any manufacturer or other licensed dealer in plate, provided that such articles shall have been produced to and taken account of by the proper officer of Inland Revenue, in conformity with this part of this Act, and the weight thereof shall have been ascertained in the month of June in the same year.

(2.) If the aggregate number of ounces of plate of silver in respect of which claims are sent in and proved to be valid and correct is not such that the amount required to repay the duties paid thereon would exceed the sum of one hundred and twenty thousand pounds, the whole of such duties shall be repaid, but if otherwise, that sum shall be distributed rateably amongst the claimants according to the number of ounces in respect whereof each of them has established his claim.

Rules to be observed by trader on claiming allowance.

12.—(1.) Every person who has given notice of his intention to claim allowance in respect of any plate of silver must, in order to entitle him to the allowance, observe such regulations as may be made by the Commissioners of Inland Revenue for the purposes of this part of this Act, and also the following rules:—

(*a.*) He must give a further notice, in duplicate, to the proper officer of Inland Revenue, on or before the twentieth day of May one thousand eight hundred and ninety, in a form to be provided by the Commissioners, setting forth the particulars of, and the weight of silver in, each article of plate in respect whereof allowance is claimed, and where it is, and also, if the article was not manufactured by him, the name of the manufacturer from whom he purchased it, and the date of the purchase:

(*b.*) He must afterwards produce and deliver the plate for examination, in such manner and at such time and place as shall be required by the Com-

missioners, and must, at the same time and place, produce his stock-book, or some other evidence, to prove to the satisfaction of the Commissioners the date of manufacture or purchase of each article of plate.

(2.) Provided that if any such person shall be desirous of exporting any article of plate of silver belonging to him in respect of which an allowance might be claimed, without losing the right to the allowance he may give to the proper officer of customs twenty-four hours previous notice, in writing, setting forth the particulars of, and the weight of silver in, the article to be exported, and a certificate from such officer of the correctness of the particulars and weight and of due exportation sent to the Commissioners shall have the same effect as if an account of such article as forming part of the stock of the person had been taken for the purpose of the allowance under this Act.

(3.) Provided also, that if any such person shall sell to a person, not being a licensed dealer in plate, any article of plate, or any combination of articles usually sold in a set, or any number of knives, or forks, or spoons, not less than a dozen at one time, and such article, or combination of articles, or knives, or forks, or spoons contain a weight or aggregate weight of silver not less than five ounces, he may before delivery of the article or articles sold, give to the proper officer of Inland Revenue notice in writing setting forth the particulars of and the weight of silver in such article or articles, and his desire that an account of the same should be taken by such officer, so that delivery may not be unduly delayed, and a certificate from such officer of the correctness of the particulars and weight and of the fact of sale sent to the Commissioners shall have the same effect as if an account of such article or articles, as forming part of the stock of the person, had been taken for the purpose of the allowance under this Act.

Mode of payment of allowance.

13.—(1.) When an account for the purpose of the allowance under this Act has been taken of any plate of silver belonging to any person, the proper officer of Inland Revenue shall give to him a certificate specifying the weight of silver for which he is entitled to allowance, and the certificate shall be final as against such person.

(2.) Upon the production of the certificate to the proper collector of Inland Revenue, together with a statutory declaration by such person (which may be made before such collector), in the form set forth in the First Schedule to this Act the collector shall pay to such person the sum to which he is entitled according to the terms of the certificate on or within six days after the fifteenth day of July one thousand eight hundred and ninety.

(3.) If any person shall knowingly make any alteration in any certificate, or make use, or attempt to make use, of any untrue certificate, or shall make any false statement in any such declaration, he shall, in addition to any other liability, incur a fine of five hundred pounds, which shall be recoverable as a fine imposed by an enactment relating to the Revenue of Excise.

Officer may enter premises of trader.

14.—(1.) It shall be lawful for any officer of Inland Revenue, and any person acting in his aid or assistance, at any time before the certificate is granted, to enter every house or other place where any plate of silver in respect of which an allowance has been claimed is deposited, and inspect and examine the same.

(2.) Every person who shall claim allowance shall, in order to entitle him thereto, with his servants and workmen and scales and weights, whenever required by an officer, aid and assist in the examination and taking account of the plate, and shall also, if required so to do, draw, bore, unsolder, or dismount any filled or mounted article of plate.

(3.) If any person shall obstruct or hinder an officer in the execution of any of the powers conferred by this Act, or any person acting in his aid or assistance, or shall practise any fraud or contrivance with intent to deceive any such officer or person in taking any such account as aforesaid, he shall forfeit the plate in respect of which the offence is committed, and also his claim to any allowance under this Act.

Traders who have sold plate as duty paid to deduct or repay the allowance.

15. Every person who shall have contracted to sell or deliver any plate as duty paid, but in respect of which duty is not payable or an allowance is claimed by virtue of this Act, shall deduct from the purchase money, or if the purchase money has been paid, shall repay the amount of the duty which would have been payable if this Act had not been passed, or of any allowance granted to him in respect of such plate.

Power to close assay offices.

16. If the Commissioners of Inland Revenue require the production and delivery of plate for examination at any assay office, the office may, notwithstanding any enactment to the contrary, be kept closed so that no plate can be taken in for assay during such time as may be necessary.

Saving clause

17.—(1.) Notwithstanding the repeal of the duties by this part of this Act the articles of gold or silver which would have been free from liability to assay by reason of exemption from duty if this Act had not been passed shall continue free from that liability.

(2.) No action shall be brought against the Commissioners or any of their officers, or any person acting in their aid or assistance, for any expenses incurred in the production, removal, or detention of plate, or for any loss or damage whatever to any plate produced for examination pursuant to this Act.

PART III.

Stamps.

Construction of 51 & 52 Vict. c. 8. s. 12.

18. In the construction of the proviso to subsection two of section twelve of the Customs and Inland Revenue Act, 1888, a security, transferable by delivery, given in substitution for a security so transferable, shall be deemed to be duly stamped with the duty of one shilling for every ten pounds, and also for any fractional part of ten pounds of the money thereby secured in conformity with the Customs

and Inland Revenue Act, 1885, if it is stamped as a substituted security in conformity with the last-mentioned Act, and also bears an impressed stamp denoting that the security for which it was substituted was duly stamped as aforesaid. 48 & 49 Vict. c. 51.

19. In lieu of the ad valorem stamp duty now payable upon an instrument of apprenticeship where there is a premium or consideration the stamp duty payable shall be two shillings and sixpence. Reduction of duty on certain apprenticeship indentures.

20. The stamp duty payable upon a policy of insurance for any payment or periodical payments agreed to be made during the sickness of any person or his incapacity from personal injury shall be one penny, and no further duty shall be payable upon any policy of insurance chargeable with duty under the Stamp Act, 1870, by reason of the same extending to any payment to be made during sickness or such incapacity. Duty on sickness policies. 33 & 34 Vict. c. 97.

21. No stamp duty shall be chargeable upon a bill of exchange drawn in the United Kingdom for the sole purpose of remitting money to be placed to any account of public revenue. Exemption of revenue remittance bills.

PART IV.

Taxes.

22.—(1.) There shall be charged, collected, and paid for the year which commenced on the sixth day of April one thousand eight hundred and ninety, in respect of all property, profits, and gains mentioned or described as chargeable in the Act of the sixteenth and seventeenth years of Her Majesty's reign, chapter thirty-four, the following duties of income tax; (that is to say,) Grant of duties of income tax.

For every twenty shillings of the annual value or amount of property, profits, and gains chargeable under Schedules (A.), (C.), (D.), or (E.) of the said Act, the duty of sixpence.

And for every twenty shillings of the annual value of the occupation of lands, tenements, hereditaments, and heritages chargeable under Schedule (B.) of the said Act—

In England, the duty of threepence;

In Scotland and Ireland respectively, the duty of twopence farthing.

(2.) All such provisions contained in any Act relating to income tax as were in force on the fifth day of April one thousand eight hundred and ninety shall have full force and effect with respect to the duties of income tax hereby granted, so far as the same are consistent with this Act.

23.—(1.) Where any person shall sustain a loss in any trade, manufacture, adventure, or concern, or profession, employment, or vocation carried on by him either solely or in partnership, or in the occupation of lands for the purpose of husbandry only, it shall be lawful for him, upon giving notice in writing, to the surveyor of taxes for the district within six months after the year of assessment, to apply to the Commissioners for the general purposes of the Relief to trading or professional persons and farmers in case of losses.

Acts relating to income tax for an adjustment of his liability by reference to the loss and to the aggregate amount of his income for that year estimated according to the several rules and directions of the said Acts.

(2.) The said Commissioners shall, on proof to their satisfaction of the amount of the loss, and of the payment of income tax upon the aggregate amount of income, give a certificate authorising repayment of so much of the sum paid for income tax as would represent the tax upon income equal to the amount of loss, and such certificate may extend to give exemption or relief by way of abatement in accordance with the provisions of the said Acts. Upon the receipt of the certificate the Commissioner of Inland Revenue shall cause repayment to be made in conformity therewith.

(3.) If any person shall be guilty of any fraud or contrivance in making any application under this section, or in obtaining any such adjustment or certificate as aforesaid, he shall forfeit the sum of fifty pounds, to be recoverable as a penalty imposed by virtue of the Taxes Management Act, 1880.

43 & 44 Vict. c. 19.

(4.) Where repayment has been made to a person in any year under the provisions of this section, he shall not be entitled to claim, or be allowed, a deduction on the assessment for a subsequent year by reference to the amount of loss in respect whereof such repayment has been obtained.

Assessments on estate of deceased persons.

24. Where any person shall die after the passing of this Act without having made a return of all his profits and gains chargeable to income tax with a view to an assessment thereon in due course, an assessment in respect of the profits and gains which arose or accrued to him before his death may be made at any time within the year of assessment, or within four months after the expiration thereof, upon his executors or administrators, and the amount thereof shall be a debt due from and payable out of his estate.

Inhabited house duty reduced as respects houses of small annual value.

25.—(1.) From and after the fifth day of April one thousand eight hundred and ninety as respects England, and from and after the twenty fourth day of May in the same year as respects Scotland, the duty payable upon an inhabited dwelling-house under the Act of the fourteenth and fifteenth years of Her Majesty's reign, chapter thirty-six, at the rate of sixpence for every twenty shillings of the annual value of the house, with the household and other offices, yards, and gardens therewith occupied is, in case such annual value shall not exceed forty pounds, hereby reduced to the rate of twopence, and is, in case such annual value shall exceed forty pounds and shall not exceed sixty pounds, hereby reduced to the rate of fourpence.

(2.) And from and after the said days respectively the duty payable upon an inhabited dwelling-house under the said Act at the rate of ninepence for every twenty shillings of the annual value of the house, with the household and other offices, yards, and gardens therewith occupied is, in case such annual value shall not exceed forty pounds, hereby reduced to the rate of threepence, and is, in case such an-

nual value shall exceed forty pounds and shall not exceed sixty pounds, hereby reduced to the rate of sixpence.

Reduction of inhabited house duty in the case of lodging-houses and exemption of houses for artizans dwellings.

26.—(1.) Where any dwelling-house chargeable to inhabited house duty under the said Act of the fourteenth and fifteenth years of Her Majesty's reign, chapter thirty-six, at the rate of ninepence, or at the reduced rate of sixpence or threepence, according to this Act, for every twenty shillings of annual value is occupied in any year by a person for the main purpose of letting furnished lodgings therein as a means of livelihood, it shall be lawful for such person before the first day of July to register his name in a list of lodging-house keepers to be kept by the clerk to the Commissioners acting in the execution of the Acts relating to the inhabited house duties, and, after such registration and before the first day of October to make application to the said Commissioners for the reduction of the rate of charge of inhabited house duty from ninepence to sixpence, or for the further reduction of the reduced rate of sixpence to fourpence, or of threepence to twopence, and on due proof of the facts to the satisfaction of the said Commissioners they shall cause the charge or amount for such year to be reduced or amended accordingly.

(2.) The assessment to inhabited house duty of any house originally built or adapted by additions or alterations and used for the sole purpose of providing separate dwellings for persons at rents not exceeding for each dwelling the rate of seven shillings and sixpence a week, and occupied only by persons paying such rents, shall be discharged by the said Commissioners, provided that a certificate of the medical officer of health for the district in which the house is situate or other medical practitioner appointed as herein-after provided, shall be produced to them to the effect that the house is so constructed as to afford suitable accommodation for each of the families or persons inhabiting it, and that due provision is made for their sanitary requirements. The medical officer of health of a district on request by the person who would be liable to pay the house duty on any house in the district, if the duty were not discharged as aforesaid, shall examine the house for the purpose of ascertaining whether such a certificate can properly be given, and if the house be constructed so as to afford such accommodation and due provision be made as aforesaid, shall certify the same accordingly; provided that the authority, if they are of opinion that the duties which would devolve on the medical officer of health under this section could not be performed by him without interference with the due performance of his ordinary duties, may appoint some other legally qualified medical practitioner having the qualification required for office of medical officer of health of the district to make such examinations and give such certificates as aforesaid.

As respects Scotland the expression "medical officer of health" means a medical officer within the meaning of the Public Health (Scotland) Act, 1867.

30 & 31 Vict. c. 101.

Amendment of s. 6 of 47 & 48 Vict. c. 62.

27. No alteration of any parish or place for the purposes of poor law administration shall take effect under section

six of the Revenue Act, 1884, during the continuance of assessments according to the sums charged in the preceding year; and that section is amended with regard to the places herein-after mentioned, as follows:—

Inns of Court.

(*a.*) The section shall be read as if the Inner Temple, Middle Temple, Lincoln's Inn, and Gray's Inn, and Inns of Chancery thereunto respectively belonging, had been excluded from its operation.

Lambeth.

(*b.*) Subsection two of the section shall not apply to the parish of Lambeth, in the county of London, but that parish shall, for the purposes of the duties of income tax and of the duties on inhabited houses and the collection thereof, be divided into the two parts for which separate jurisdictions existed on the fifth day of April one thousand eight hundred and eighty-six, and each of these parts shall for those purposes be deemed to be a parish or place, and shall be within the jurisdiction of the General Commissioners who had on that day jurisdiction therein.

Assessment of Universities of Oxford and Cambridge.

28. Notwithstanding any enactment to the contrary, the assessment and collection of the duties of income tax, and of the duties on inhabited houses within the Universities of Oxford and Cambridge, shall be deemed to have been as from the fifth day of April one thousand eight hundred and eighty-six, and shall be subject to the provisions following; (that is to say,)

(*a.*) Any college or hall for the time being attached to or associated with the University of Oxford, and all offices and employments in connexion therewith, and persons residing therein shall be within the jurisdiction of the General Commissioners for that university:

(*b.*) The General Commissioners for the University of Cambridge shall be the commissioners for the said duties in respect of all the university buildings, and the colleges, halls, and public hostels for the time being attached to or associated with that university, and of all offices and employments in connexion therewith, and of the profits or gains of all persons residing therein:

(*c.*) Each of the said jurisdictions shall be deemed to be one parish or place for the purposes of assessment and collection.

Assessment of income tax under Schedules (A.) and (B.), and of the inhabited house duties for the year 1890-91.

29.—(1.) The sum charged as the annual value of any property elsewhere than in the metropolis as defined by the Valuation (Metropolis) Act, 1869, in the assessment of income tax thereon for the year which commenced on the sixth day of April one thousand eight hundred and eighty-nine shall be taken as the annual value of such property for the assessment and charge thereon of the duties of income tax hereby granted under Schedules (A.) and (B.).

32 & 33 Vict. c. 67.

(2.) The sum charged as the annual value of every inhabited house elsewhere than in the said metropolis made thereon for the year which commenced as respects England

on the sixth day of April one thousand eight hundred and eighty-nine, and as respects Scotland on the twenty-fifth day of May one thousand eight hundred and eighty-nine, shall be taken as the annual value of the inhabited house for the assessment and charge thereon of the duties on inhabited houses as respects England for the year which commenced on the sixth day of April one thousand eight hundred and ninety, and as respects Scotland for the year commencing on the twenty-fifth day of May one thousand eight hundred and ninety.

(3.) The inspectors or surveyors of taxes shall be the assessors of the said duties of income tax under Schedules (A.) and (B.), and of the said duties on inhabited houses.

Provisions of Income Tax Acts to apply to duties to be granted for succeeding year.

30. In order to ensure the collection in due time of any duties of income tax which may be granted for any year commencing on the sixth day of April, all such provisions contained in any Act relating to income tax as were in force on the preceding day shall have full force and effect with respect to the duties of income tax which may be so granted in the same manner as if the said duties had been actually granted by Act of Parliament, and the said provision had been applied thereto by the Act.

PART V.

Methylated Spirits.

Exemption of methylated spirits from duty.

31.—(1.) A drawback of the duty payable on spirits shall not be allowed in respect of any duty-paid spirits used for methylation by a rectifier or any other person after the thirtieth day of June one thousand eight hundred and ninety, and section one hundred and seventeen of the Spirits Act, 1880, is hereby replealed as from that day.

43 & 44 Vict. c. 24.

(2.) Methylated spirits shall, subject to the provisions of the Spirits Act, 1880, as amended by this Act, be exempt from duty.

Amendment of 43 & 44 Vict. c. 24.

32.—(1.) The substance mixed with spirits for the purpose of methylation may be any combination of substances approved for the purpose by the Commissioners; and the term "methylated spirits" in the Spirits Act, 1880, shall, in lieu of the meaning thereby assigned to it, mean spirits mixed with any substance or combination of substances approved for the purpose of methylation by the Commissioners.

(2.) An authorised methylator may supply methylated spirits in vessels containing not less than a reputed quart, provided that the quantity supplied by the methylator to any one person at a time is not less than five gallons.

(3.) In any mixture of methylated spirits with gum resin the quantity of gum resin shall not be less than three ounces in every gallon of the mixture.

Penalty for breach of regulations

33.—(1.) If any person authorized to make or sell methylated spirits or to receive methylated spirits for use in any art or manufacture shall not observe any prescribed regulation he shall, in addition to any other fine or liability, incur a fine of fifty *pounds.*

(2). If any person licensed to use a still or retort is convicted of any offence whatsoever in relation to methylated spirits the Commissioners may suspend or revoke his licence.

Customs provisions.

34. Methylated spirits may be exported subject to such regulations as may be prescribed by the Commissioners of Customs, and, with the permission of the said Commissioners, spirits may be methylated in a Customs warehouse.

Construction of part.

35. This part of this Act shall be construed as one with the Spirits Act, 1880.

Repeal of enactments.

36. The enactments specified in the Second Schedule to this Act are hereby repealed to the extent specified in the third column of that schedule.

A. D. 1890.

SCHEDULES.

Section 13.

FIRST SCHEDULE.

Statutory Declaration in respect of Allowance upon Silver Plate.

I, , of , hereby solemnly declare—

1. That all duties have been paid upon the plate produced by me for examination in respect whereof the certificate hereunto annexed marked A. was given.

2. That no part of such plate has been examined or taken account of more than once for the purpose of obtaining an allowance under the provisions of the Customs and Inland Revenue Act, 1890.

3. That the plate was manufactured in the United Kingdom, and had not, at the time when the account was taken, ever been used, and was at the time of such account in my custody and possession as my property in trade.

4. That the statements in the notices delivered by me in pursuance of the said Act and in the certificate are true, and that no fraud was practised upon the officer taking the account.

Declared before me the day of one thousand eight hundred and ninety.

SECOND SCHEDULE.

Section 36.

Enactments repealed.

Session and chapter.	Title.	Extent of repeal.
1 Geo. 2. c. 32	An Act for repealing the duty granted by an Act made in the sixth year of the reign of His late Majesty, on silver plate made, wrought, touched, assayed, or marked in Great Britain; and for granting a duty on licences to be taken out by all persons dealing in gold or silver plate; and for discontinuing all drawbacks upon silver plate exported; and for more effectually preventing frauds and abuses in the marking or stamping of gold or silver plate.	The whole Act.
22 Geo. 2. c. 24	An Act to amend an Act made in the last session of Parliament, for repealing the duty granted by an Act made in the sixth year of the reign of His late Majesty on silver plate; and for granting a duty on licences to be taken out by all persons dealing in gold or silver plate, by permitting the sale of gold or silver plate in small quantities without licence; and by granting a duty instead of the duty now payable upon licences to be taken out by certain dealers in gold or silver plate; and also a duty upon licences to be taken out by pawnbrokers dealing in gold or silver plate, and refiners of gold or silver.	The whole Act.
24 Geo. 3. sess. 2. c. 53	An Act for granting to His Majesty certain duties on all gold and silver plate imported; and also certain duties on all gold and silver wrought plate made in Great Britain.	The whole Act.
25 Geo. 3. c. 64	An Act for altering and amending an Act, made in the last session of Parliament, intituled An Act for granting to His Majesty certain duties on all gold and silver plate imported, and also certain duties on all gold and silver wrought plate made in Great Britain.	The whole Act
32 Geo. 3. c. 59	An Act for allowing on the exportation of manufactured plate, for the private use of persons residing or going to reside abroad, the same drawback as is now allowed on the exportation of such plate by way of merchandize.	The whole Act.
35 Geo. 3. c. 135	An Act for repealing the stamp office duties on advertisements, almanacks, newspapers, gold and silver plate, stage coaches, and licences for keeping stage coaches now payable in Great Britain; and for granting new duties in lieu thereof.	The whole Act.
1 Geo. 4. c. 14	An Act to repeal the drawback on certain gold articles exported, and to permit the exportation of cordage, entitled to bounty, free from right of pre-emption by the commissioners of the navy.	The whole Act.

Enactments repealed—Continued.

Session and chapter.	Title.	Extent of repeal.
4 & 5 Vict. c. 56.....	An Act for taking away the punishment of death in certain cases, and substituting other punishment in lieu thereof.	The whole Act.
7 & 8 Vict. c. 22.....	An Act to amend the laws now in force for preventing frauds and abuses in the marking of gold and silver wares in England.	Section five in part, namely, from "and the duty" to "thereof," and from "and to receive" to "thereto only," and section ten from the second "or where" to the last "duties."
12 & 13 Vict. c. 80.....	An Act to repeal the allowances on the purchase of stamps and for the receiving and accounting for the duties on gold and silver plate, and to grant other allowances in lieu thereof.	The whole Act.
17 & 18 Vict. c. 96.....	An Act for allowing gold wares to be manufactured at a lower standard than that now allowed by law, and to amend the law relating to the assaying of gold and silver wares.	Section three.
29 & 30 Vict. c. 64.....	An Act to amend the laws relating to the Inland Revenue.	Section fifteen.
39 & 40 Vict. c. 35.....	The Customs Tariff Act, 1876.....	So much of section one and the schedule as relate to the duties upon plate, and sections three to six.
43 & 44 Vict. c. 24.....	The Spirits Act, 1880.....	Section one hundred and twenty-three in part, namely, the words "in an excise warehouse" in subsection two.
46 & 47 Vict. c. 55.....	The Revenue Act, 1883.....	Section ten in part, namely, from after the first "customs" to "duty" in subsection two, the words "the duty and" in subsection four, the words "free of duty" in subsection seven, and the sentence commencing "Where" in subsection ten.
47 & 48 Vict. c. 62.....	The Revenue Act, 1884.....	Section four in part, namely, from "subject" to "customs."

APPENDIX.

EXTRACTS FROM SENATE REPORT No. 2332, FIFTIETH CONGRESS, FIRST SESSION.

Senate Report No. 2332. Fiftieth Congress, first session.

OCTOBER 4, 1888.—Ordered to be printed.

Mr. Aldrich, from the Committee on Finance, submitted the following report (to accompany bill H. R. 9051):

The Committee on Finance, to whom was referred the bill (H. R. 9051) to reduce taxation and simplify the laws in relation to the collection of the revenue, respectfully report:

* * * * * * *

The provisions of the substitute which allow the use of alcohol in the industrial arts free from taxation would prove of great benefit to a large number of important manufactures. Alcohol is used in the production of more than five hundred chemical and pharmaceutical preparations and in many of the mechanical and industrial arts, and its use in all these directions would be largely extended if the onerous tax should be abolished. The heavy tax upon alcohol unnecessarily increases the price of many manufactured products, with no corresponding benefit except the resulting revenue, which is now unnecessary.

* * * * * * *

TARIFF STATEMENTS.

[Accompanying Report 2332 Fiftieth Congress, first session.]

ALCOHOL.

STATEMENT OF EMIL KIPPER, OF ZYLONITE, MASS.

At our late interview you asked me what proportion of alcohol was used for industrial purposes. In answer I inclose the correspondence between Mr. Switzler, on behalf of the United States Government, of Dr. Squibb and others as representing the manufacturer, and correspondence of D. A. Wells with the Bureau.

The result of these communications is not very satisfactory, owing to their discrepancy, Commissioner Miller estimating 7.2 per cent and Dr. Squibb 50 per cent of the whole production as being used for artistic, industrial, and medicinal purposes.

Whatever the amount, there is no question that the consumption of alcohol used in the arts has been immensely reduced by the high tax, and the best illustration of what would be used in the arts if duty was removed is contained in D. A. Wells's letter, October 11, 1887, who as special commissioner of revenue has a more intimate knowledge of the whole subject than any other known source.

In this letter, which I commend to your attention, he shows that in 1860, when our industries were at a low ebb, over one-third, 30,000,000 proof gallons, of the whole product, 90,000,000, was consumed in the arts whereas he now says, in our present greatly increased development, only 10 per cent of the total product is used. Mr. Wells's letter details some very interesting facts as to the crushing out of some industries and diminishing others, that go to prove how severe is the load of this tax on the industrial arts.

A result of removing the tax on spirits, never touched upon by either party up to this date, is this: The reduced cost of spirits on abolition of tax will so enlarge the industrial field that a whole class of products now limited would be revived not only for home consumption, but for export, and this would be immediately felt by the agriculturist in increased demand for grain. It is fair to state that the increased consumption of spirits for industrial purposes, were the tax repealed, would foster and benefit so numerous channels of trade that the most sanguine estimates now suggested will be greatly exceeded.

You have probably noticed that the present tax aids the combination of distillers in their efforts to increase the price of spirits to the detriment of the consumer, since there is five times as much capital employed to pay the tax as would be required to produce the spirits were the tax repealed. A distiller may have capital sufficient to produce the spirits, but he needs quintuple the amount to pay duty and conduct his distillery business.

Since the whisky combination the price of alcohol has been advanced from $1.98 to $2.13, deducting tax. This would show an advance of 50 per cent in price of spirit exclusive of tax.

I also inclose an article from the Times, March 19, for your perusal, referring to the distillers' trust. I perceive one of the leading minds of the combination is D. T. Mills; is there any relationship between this gentleman and the chairman of the Ways and Means Committee? Mr. Mills is anxious to reduce the surplus by reducing the tariff, yet strenuously opposes a reduction of the duty on alcohol used in the arts, which would aid the object he alleges he is anxious to effect, but in addition would free the country from a crushing weight on so many branches of industry.

The board appointed to advise the Government in regard to the methylation of spirits for use in the arts stated that by charcoal filtration and subsequent distillation the wood alcohol could be separated from the methylated spirit, and therefore reported adversely as to the introduction of a methylated act similar to the one in force in England.

In reply to this I inclose an abstract of the German law, where all the difficulties have now been overcome and the revenue protected.

The German law went into effect last October, and if any interest is felt, I can procure the details, and probably opinions as to its working effect. A perusal of the abstract, as it seems to me, will convince the revenue authorities that it would be as practicable in the United States as in Germany.

NORWICH, CONN., *October 11, 1887.*

DEAR SIR: I am in receipt of your note of October 8, requesting me to communicate to you any information I may have in respect to the percentage of distilled spirits used in the arts at the present time in the United States. I regret that I am not able to communicate any information of value relative to the present condition of affairs, although formerly when special commissioner of the revenues, I gave much attention to the subject.

Prior to the imposition of any taxes on distilled spirits, or before the war, I am of the opinion that at least 33 per cent of the whole product of the country, which in 1860 was probably about 90,000,000 proof gallons, was consumed in the arts and industries. In support of this conclusion I would ask your attention to the following extract from a report of the result of my investigations (as United States special commissioner of revenue on this subject), which I have heretofore published, showing somewhat in detail the extent and character of the consumption of distilled spirits in the United States for industrial, medicinal, and art purposes prior to 1860, and the effects of subsequent high Federal taxation in curtailing or absolutely preventing such consumption:

"For a period of nearly a half century previous to 1860 the manufacture of spirits in the United States had been free from all specific taxation or supervision by either the National or State Goverments, and being produced mainly from Indian corn, at places adjacent to the localities where this cereal was cultivated, and to a large extent also from corn that was damaged and so otherwise unmarketable, was afforded at a very low price, the average market price in New York for the four years next preceding 1862 having been about 23 cents per proof gallon, with a minimum price during the same time of 14 cents per gallon. In Cincinnati the market price of whisky for August, 1861, was commercially reported as "closing dull" at 13 cents per gallon. The price of alcohol in New York during the period above noted ranged from 40 to 60 cents per gallon. Under such circumstances the consumption of distilled spirits in the United States previous to the war, for a great variety of purposes, had become enormous, affording a practical illustration of the curious varying relations between prices and consumption, and also of what may be considered in the light of an axiom in political economy, namely, that practically there is almost no limit to the consumption of any useful commodity, provided that through a reduction of cost or price it is brought within the purchasing power of those who desire to consume.

"Thus, for the year ending June, 1860, the product of distilled spirits in the United States, as returned by the census, was 89,308,581 gallons (proof spirits), or, including alcohol, 90,412,581 gallons, and this aggregate, subsequent investigations proved, was considerably less, rather than in excess of, the actual production. The maximum quantity of domestic distilled spirits exported in any one year previous to the war was never in excess of 3,000,000 gallons, so that the annual consumption of domestic spirits in the United States in 1860, for all purposes, was at the rate of nearly 3 gallons for every man, woman, and child of the population."

It would be an error, however, to assume that all of this immense production of spirits was used for intoxicating purposes or in the way of stimulants, inasmuch as the extreme cheapness of proof spirits and of alcohol in the United States at the period under consideration occasioned their employment in large quantities for various purposes which were absolutely or almost unknown in Europe, where the price of these same products, through the fiscal necessities of the various governments, has always been made so artificially high as to greatly limit their industrial application. Thus one of these employments, peculiar to the United States at this time, was the manufacture of a cheap illuminating agent known as "burning fluid," composed of one part of rectified spirits of turpentine mixed with from four to five parts of alcohol, each gallon of alcohol thus used requiring 1.88 gallons of proof spirits for its manufacture. The use of this preparation in the United States in 1860 in places where coal gas was not available was all but universal, and necessitated a production and consumption of at least 25,000,000 gallons of proof spirits per annum, which in turn would have required the production and use of from 10,000,000 to 12,000,000 bushels of corn. And so extensive was the scale on which its manufacture was conducted that in Cincinnati alone the amount of alcohol required every twenty-four hours for this industry was equivalent to the distillate of 12,000 bushels of corn. Here, then, had been gradually created a new, peculiar, and large market for one of the staple products of American agriculture and also for the peculiar product—turpentine—of mainly one agricultural State, North Carolina.

The excessive cheapness of alcohol also led to its most extensive use for fuel in manufacturing and in domestic culinary operations, for bathing and cleaning, for the manufacture of varnishes, vinegar, imitation wines, flavoring extracts, perfumery, patent medicines, white lead, percussion caps, hats, photographs, tobacco, and a great variety of other purposes. It is also to be noted as a curious part of this history that nearly all preparations, washes, and dyes for the hair, which at that time in other countries—as now almost universally—were prepared almost exclusively on

a basis of fats or oils or some nonspirituous liquids, were in the United States then composed almost wholly on a basis of alcohol, the comparative difference in the price of this article in the United States and Europe giving an entirely different composition to a product of large consumption intended to effect a common object. The transcript of the sales of a single distillery and rectifying establishment in New York City, put in as evidence before the United States Revenue Commission in 1865, showed sales in a single year of 19,040 gallons of alcohol in one case and 12,657 in another to two manufacturers of different popular hair washes and tonics. From the same firm a manufacturer of an "extract of sarsaparilla" bought in one year 81,300 gallons, and another manufacturer, who made a "pain killer," 41,195 gallons. A single firm of patent medicine proprietors in Massachusetts testified their consumption of distilled spirits to have averaged 100,000 gallons per annum, while another in western New York, engaged simply in the manufacture of a horse medicine, reported a consumption, prior to the imposition of internal-revenue taxation, of upwards of 50,000 gallons of proof spirits annually. Individual hairdressers in the large cities also testified that the use of 400 gallons of alcohol (equal to 750 gallons of proof spirits) yearly in their local business was not an unusual circumstance.

For the manufacture of imitation wines the demand for distilled spirits in the United States prior to 1864 was also very large, four firms in the city of New York reporting a consumption of 225,000 gallons of pure spirits for this purpose during the year 1863. Large quantities of neutral or pure spirits were also used at the time in the United States for the "fortifying" of cider, to prevent or retard acidification, especially in the case of cider intended for export to tropical countries, to the Southern States, or to the Pacific. One distiller in western New York reported a regular sale, during the year 1862, of 8,000 gallons per month for this purpose exclusively.

The first tax imposed by Congress on distilled spirits of domestic production was 20 cents per proof gallon, and went into effect on the 1st of July, 1862. This tax continued in force until March 7, 1864, when the rate was advanced to 60 cents per gallon. On the 1st of July, less than four months subsequently, the rate was again raised to $1.50 per gallon, and on the 1st of January, 1865, six months later, it was further and finally advanced to $2 per gallon. In addition to these specific taxes heavy additional taxes on the mixing, compounding, and wholesale and retail dealing in spirits were also imposed in the way of licenses.

The immediate effect of this imposition and rapid increase of internal taxes upon distilled spirits was a series of industrial and commercial phenomena, more remarkable than anything of the kind before recorded in economic history; and yet so completely was the attention of the American people engrossed at this time in other and greater events—events affecting their very existence as a nation—that the results referred to did not so much as create a ripple in public opinion, and were barely adverted to, if noticed at all, in the columns of the public press. In short, the influence of these taxes was to entirely and rapidly revolutionize great branches of domestic industry, and in some instances to utterly destroy them. Thus, for example, the manufacture of burning fluid entirely ceased, inasmuch as the rise in the price of alcohol from 40 cents to $4 and upwards per gallon, together with the cessation of the supply of turpentine from North Carolina—then a State in rebellion—rapidly converted it from the cheapest to the dearest of all illuminating agents. Here, also, very curiously, the public did not experience any great inconvenience by reason of this change; for by one of those happy and unexpected occurrences, almost in the nature of accidents, which have so often characterized the history of the United States, and which some are pleased to regard as "special providences," it so happened that the discovery of vast and natural supplies of petroleum in Pennsylvania, and the practical application of its distillates for illuminating purposes, was almost coincident in point of time with the compulsory disuse of burning fluid; while the fact that the new material possessed great advantages in point of cheapness and effect over the old caused the change in popular use to be effected voluntarily and with great rapidity.[1] As a further illustration of the compensations which invariably attend the losses immediately contingent upon industrial progress, and through the disuse of old products, methods, and machinery, it may be stated that, although the manufacture of burning fluid ceased, the business of collecting, preparing, and exporting petroleum rapidly became one of the most important in the country; while the demand at home and abroad for the lamps and their appurtenances devised and adapted in the United States for the use of the distillates of petroleum was alone sufficient to employ the entire manufacturing capacity of all the glassworks of the country for a term equivalent to two entire years.

Druggists and pharmaceutists in the United States estimated the reduction in the

[1] The first company organized to supply petroleum in the United States was in 1854, but it was not until 1861-'62 that the product began to constitute an important article of commerce, and it was some considerable time later before its distillates were made sufficiently cheap and good to induce anything like general use. The average price of burning fluid from 1856 to 1861 was from 45 to 65 cents per gallon. The average price of refined petroleum in 1863 was 51 cents; and the domestic consumption about 500,000 barrels.

use of alcohol in their general business, consequent upon its increased cost from taxation, at from one-third to one-half. The popular hair preparations into which alcohol entered largely as a constituent vanished from the market; and the manufacturers of patent medicines and cosmetics generally abandoned their old preparations and adopted new ones. The manufacturer of horse medicines, who used 50,000 gallons of spirits in 1863, woefully testified in 1865 that his business was destroyed. Varnish-makers, who, when alcohol could be purchased at from 50 to 60 cents per gallon, used it in large quantities, were of necessity compelled to entirely or in a great degree abandon its use when the price rose to $4 per gallon and upward; and yet special investigation showed that the quantity of varnish manufactured was not correspondingly reduced, inasmuch as the manufacturers at once substituted other and cheaper solvents for their gums, especially the naphthas or light distillates of petroleum which were then opportunely seeking uses and a market. Within a comparatively few years, also, the continued high price of alcohol has led the manufacturers of quinine to substitute the distillates of petroleum as a solvent for the alkaloids in the cinchona barks, and with such success that it is doubtful whether the old processes would be again adopted, even if alcohol could again be afforded at its former prices. The manufacturers of hats, who had before used a composition of gum-shellac dissolved in alcohol almost exclusively for stiffening the hat "bodies" or "foundations," and were thus large consumers of alcohol, were compelled to abandon its use, and for a time were subjected to no little inconvenience. But even here substitutes were soon found, and in addition to the use of cloth as a material for hats in the place of felt and silk, plush was largely introduced and became popular. The manufacture of vinegar from whisky, by reason of the great advance in the price of distilled spirits, was also in a large degree broken up, and this in turn had the effect to destroy a large export business of this article, as well as to increase the market price of pickles to the extent of from one-third to one-half, and also to seriously affectt he manufacture and cost of white lead, and occasion extensive importations of this article from other countries.

The business of fortifying cider for movement or export to the Pacific coast and to the tropics before referred to, as well as the manufacture of imitation wines and of cheap perfumery, was likewise very seriously interfered with or destroyed, as was also the business of manufacturing the fluid extracts of the medicinal principles of plants; and it was represented to the revenue commission by members of the American Pharmaceutical Association that there was a marked tendency throughout the country on the part of physicians and others to abandon the use of alcoholic extracts and fall back upon the old custom of employing crude drugs, decoctions, and sirups as substitutes; and further that there was an attempt to keep down the price to the consumer of many officinal preparations which absolutely required the use of alcohol by putting them up at less than their proper officinal strength, thus inflicting a sanitary injury upon the whole community. Finally, in all branches of the industrial arts, where the continued use of distilled spirits was indispensable and no cheaper substitute could be found, the utmost economy in its use was everywhere practiced.

Another curious incident connected with this history was that the curators of the leading museums of the country—anatomical or natural history—attached to institutions of learning, memorialized Congress to the effect that, owing to the high price of alcohol they could not afford to make good the waste of this substance (by evaporation and leakage) as employed by them for scientific purposes; and that in consequence many important collections were becoming greatly impaired in value, and the progress of scientific discovery and research greatly impeded. And Congress, recognizing the desirability of giving relief in respect to this matter, empowered the Secretary of the Treasury to grant permits to incorporated American institutions of learning to withdraw spirits from bond in specified quantities for scientific purposes without payment thereon of the internal-revenue taxes.

My opinion now is that not more than 10 per cent, as a maximum, of the present product of distilled spirits in the United States is used for industrial, artistic, or medicinal purposes.

If the present tax of 90 cents per proof gallon could be reduced to 50 cents, the rate established from 1868 to 1872, I have no doubt that the use of alcohol for industrial and medicinal purposes would be very largely increased, cheapening many manufactured products, enlarging the market for the same both at home and abroad, and without occasioning any material reduction of the national revenues.

I am, yours, most respectfully,

DAVID A. WELLS.

Mr. WILLIAM F. SWITZLER.

OFFICE OF JOHN F. HENRY & CO.,
New York, December 2, 1887.

DEAR SIR: Your esteemed favor of the 29th ultimo is before me and contents noted. I observe that Hon. David A. Wells, in a letter to you under date of October 11, a copy of which you kindly inclosed, says: "When special commissioner of the rev-

enue I gave much attention to the tax on distilled spirits, and was of the opinion that at least 33 per cent of the whole product of the country, which in 1860 was probably about 90,000,000 proof gallons, was consumed in the arts and industries."

How can you account for the apparent contradiction when later in the same letter he says: "My opinion now is that it is not more than 10 per cent of the present product."

Was he led to this opinion by your letter to him under date of March 5, 1887, in which you requested him "to deduct from his estimate 10 per cent for consumption in the manufacturing and mechanic arts?"

If he was able when in office to arrive at the opinion that the percentage was 33 per cent, can you not arrive at the correct figures easily by referring to the Commissioner of Internal Revenue, as suggested by Dr. Squibb in his letter under date of October 17, 1887, also kindly furnished, in which he says:

"If every user of alcohol or spirits of any grade is obliged to render a monthly account, under oath, to the collector of internal revenue of all that he uses, as I have to do, the data must exist in the Commissioner's office for determining this question, without any guess work about it. But it must be borne in mind that the abolition of this tax would dismiss the force now used for its collection, and therefore it is destructive to the interests of this office to aid in the abolition of the tax by furnishing such data."

Permit me to ask if you can furnish any statistics showing how the percentage of alcohol used in the arts and manufactures has fallen off from 33 per cent under the administration of Hon. David A. Wells to 10 per cent, as you claim it is now.

What the wholesale drug trade of this country desires are *facts* and figures, and surely these ought to be obtainable at the office of the Commissioner of Internal Revenue, where Mr. Wells obtained *his* knowledge.

While the whole drug trade respects and honors Mr. James A. Webb, who practically controls the sale of alcohol in this vicinity, they prefer official figures from Washington, believing, with Dr. Squibb, who writes in letter of October 17:

"I know Mr. James A. Webb very well and respect him highly. I buy all my spirits from him and have done so for many years, and I know that for this vicinity his estimate should be of far more value than mine, yet I should fear unconsciously his estimate should not be free from bias. That is, were I in Mr. Webb's place and know as he does that the abolition of this tax would diminish my business by the whole amount of the tax, or to about one-sixth of what it is at present, I might be far more biased than he is in my endeavor to maintain the tax on some part of it. * * * My own pecuniary interests are the same as are Mr. Webb's, for the abolition of this tax would hurt my business almost as much as it would his, but with this very great difference, that his would be damaged permanently, and possibly beyond recovery, while mine would probably begin to recover very soon, and within five years would be better than ever before. * * * Mr. Webb is in close relationship with several of the large Western distillers and knows those who are in this enormous monopoly pretty well, and he doubtless in a measure represents them and their interests."

Dr. Squibb's estimate that 1,000,000 proof gallons are used in the arts and manufactures per annum seems neither improbable nor unreasonable, and certainly warrants the drug trade in this country asking Congress to repeal the law and abolish the tax. Eighty dollars out of every hundred dollars (the cost of the average barrel of alcohol) goes to the Treasury of the United States as a tax, not only being excessive, but unreasonable, considering the enormous "surplus" growing at the rate of $100,000,000 per annum.

Trusting you will secure and furnish me with the statistics referred to by Dr. Squibb as obtainable at the office of the Internal Revenue Department, and with thanks for your kindness in furnishing the inclosures sent with your letter of the 29th ultimo, I remain,

Respectfully, yours,

HENRY E. BOWEN.

Mr. W. F. SWITZLER,
Chief of Bureau of Statistics, Washington, D. C.

TREASURY DEPARTMENT, BUREAU OF STATISTICS,
Washington, D. C., October 14, 1887.

DEAR SIR: More critically examining your letter of October 10 I find that you estimate that the total consumption of spirituous liquors in manufactures, medicines, the arts, etc., amounts annually to about 14,000,000 of proof gallons. I would be very much obliged if you would more in detail set forth the reasons by which you arrive at this conclusion, as it is my desire and purpose not only to approximately reach the truth in reference to this question, but the processes by which that truth is evolved,

for the satisfaction of all concerned. I find your estimate so far exceeding the estimate, made by others presumably competent to give opinions on the subject, that I am interested in knowing how it is that gentlemen of equal opportunities of knowledge and equal interest in the subject vary so widely in respect to the percentage used in the arts.

You have doubtless seen the letters of Mr. James A. Webb, of New York City, addressed to me on this subject, and published in my Quarterly Report No. 2, Series 1886-'87, on pages 397-398.

According to the report of the Commissioner of Internal Revenue for the fiscal year ending June 30, 1886, pages LVII and LVIII, we find, as before stated, that the total production of alcohol for that year was 11,247,877 gallons, more than half of which was produced in the first, fifth, and eighth Illinois districts. Also, according to the same report, there were only 2,396,243 gallons of high wine produced during the same year. Of the total production of alcohol, 2,253,590 gallons were exported, leaving only 8,994,287 gallons for consumption in the United States. Yet I understand your letter to assume that there are about 14,000,000 of gallons consumed in the arts and manufactures; that is to say, about 7,000,000 of gallons more than the total production after deducting the number of gallons exported.

Mr. Webb claims a knowledge of the distribution and sale of nearly all of the product of alcoholic distilleries, and it is stated that a very large proportion of the alcoholic product which enters into the arts and manufactures passed through his hands. Are these claims well founded? If they are, it would seem that his opinion on the subject is entitled to great weight, in the absence of complete statistical data collected from original sources upon the subject.

I am also informed that a considerable portion of this alcohol and high wines is manufactured into a cheap kind of spirits, which is used as a beverage; also, there is without doubt a considerable portion used in families for various purposes which could not properly be claimed as used in the manufacturing and mechanical arts.

Perhaps I misunderstand your letter. At all events, I would be very much obliged for another explanation of it, and giving the reasons more in detail upon which your estimate is based.

Very respectfully,

WM. F. SWITZLER, *Chief of Bureau.*

Dr. E. R. SQUIBB,
No. 56 Doughby Street, Brooklyn, N. Y.

NORWICH, CONN., *April 9, 1887.*

MY DEAR SIR: On my return this week from a voyage to the West Indies and South America I find your note of March 4, hence the reason of my apparent neglect.

I have given a good deal of attention to the question of the taxation, production, and use of distilled spirits, having been, as you perhaps know, the Commissioner of Revenue from 1866 to 1870, when the changes were made from the $2 per gallon tax to 50 cents, and subsequent higher rates. I made a very full discussion of our experience in a work published by Putnam & Co., of New York, in 1885, entitled "Practical economics." Up to a certain point there is not much difficulty in determining the cost of distilled and fermented liquors to the country. The returns of internal revenue give, with approximate accuracy, the production and consumption of domestic liquors. The average price of proof spirits in first hands, exclusive of the tax, is not far from 25 cents (23.8 for Cincinnati in 1883). Add the internal tax, 90 cents, and an average of about 10 cents per gallon for additional taxes, and you have a 71,000,000 proof-gallons product for 1885, some $88,000,000 or $89,000,000 as first cost. I should put the domestic consumption for manufacturing and artistic purposes at higher than 10 per cent. The investigation published by the Internal-Revenue Office some years ago was exceedingly imperfect and unreliable.

The value of imported spirits, including champagne and other wines and also imported fermented liquors, in first hands, can be readily got by adding valuation to duties and 10 per cent at least for other charges. I do not know how to get the quantity and valuation of our domestic wine product, other than from the census data.

The internal revenue gives the beer product in barrels and the aggregate tax on the same. I have assumed the value in the hands of the manufacturer at an average of $6 per barrel. I think at least $1 per barrel additional to the tax should be allowed to cover distribution expenses and profits when sold to retailers.

Now, as to the profits of retailing, everything is indefinite and there are no certain data. Those who have discussed the matter most intelligently in Great Britain seem to have come to the conclusion that the first market price is about doubled in the process of retail distribution. Popular opinion generally assumes a much higher figure. My conclusion in 1884 was that about $475,000,000 represented the minimum

annual cost to consumers of distilled and fermented liquors in the United States exclusive of domestic wines, the returned value of cotton manufactures for 1880 having been $210,000,000; woolen manufactures, $160,000,000; boots and shoes $195,000,000. I think the tendency is to rate the annual cost of consumption of liquors too high. It hardly seems possible that it can so greatly exceed the value of other staple articles.

I suppose it is too late for you to avail yourself of any suggestions I can offer. But I will nevertheless suggest that the way to discuss the question is to first calculate and present the first or wholesale cost. Here we are on safe ground, and can make approximately accurate conclusions. Beyond this you can do little more than speculate and state what the aggregate would be if the retail cost was doubled or trebled.

Of course it will give me pleasure to afford you at any time any help that I can offer.

I am yours, most respectfully,

DAVID A. WELLS.

Hon. WILLIAM F. SWITZLER.

BROOKLYN, *October* 17, 1887.

DEAR SIR: Your favor of the 14th received.

In an early paragraph of my reply to your first letter I asked your attention to an estimate made previously in a pamphlet sent to you, wherein it is especially claimed that, so far as I am concerned, these estimates are all mere guesswork, and I am sure that what you now say shows this to be true. And therefore having now guessed twice by different methods and come so wide of the truth, it becomes me to give up the problem. I can, however, at your request, give you in more detail the very small number of facts which were the basis of my recent estimate.

From July 1, 1886, to July 1, 1887, I bought and used in manufacturing 424 barrels of neutral spirit, averaging about 46 gallons to the barrel, making about 19,500 gallons, of a strength varying from 92 to 93 per cent true. This number of gallons of this strength multiplied by 1.88 gives 36,677 gallons of proof spirit or proof gallons, by which the internal-revenue accounts are kept and by which the tax is collected. Fearing to overestimate by using my own consumption as a basis, I called this amount 35.000 proof gallons.

Now, I really know nothing about what others in this vicinity use, and impertinent inquiries into other people's business is apt to be resented by misleading answers, so that when I say there are twenty others who use as much or more than I do it is a mere broad guess. There may possibly be not one who uses as much as I do and may be forty who use half as much. Many of these houses are in exactly the same line of manufacture and sale that I am, and I can easily name four who are publicly rated as having three times the capital employed that I have and whose sales of the same alcoholic products are probably three times what mine are. But where they get their spirit, or what grade of spirit they use, or how much, I have no means of knowing. If they do use three times as much as I do, then, together with my own consumption, we use 31.5 per cent of my estimate for this large vicinity. My own individual consumption is, however, all that I really know, and this is 3.5 per cent of my total estimate for a neighborhood full of large alcoholic industries of all kinds. Therefore, I consider the estimate of 1,000,000 proof gallons not improbable nor unreasonable.

In reply to your inquiry, I know Mr. James A. Webb very well, and respect him highly. I buy all my spirit from him, and have done so for many years, and I know that for this vicinity his estimates should be of far more value than mine; yet I should fear that unconsciously his estimate might not be free from bias. That is, were I in Mr. Webb's place and knew as he does that the abolition of this tax would diminish my business by the whole amount of the tax or to about one-sixth of what it is at present, I might be far more biased than he is in my endeavor to maintain the tax or some part of it. Mr. Webb is not a manufacturer, but only a middleman or a distributor of spirit, and he believes that he distributes all or most of what is used in this vicinity. This I doubt, because I know of manufacturers who buy from him and from other sources also, and who would not like him to know what they use. Since I have been a consumer large enough to handle a car load of spirits at a time it has been my interest to go over Mr. Webb and buy directly from the makers whose spirit I use and like best, and other better business men than I am are likely to be wise enough to do this; and it is upon such grounds that I doubt Mr. Webb's estimate that 90 per cent of the spirit produced is drank and not more than 10 per cent is used in manufactures and the arts.

My own pecuniary interests are the same as are Mr. Webb's, for the abolition of this tax would hurt my business almost as much as it would his, but with this very great difference, that his would be damaged permanently, and possibly beyond recovery, while mine would probably begin to recover very soon, and within five years

would be better than ever before. If, instead of buying neutral spirit of Mr. Webb in 10-barrel lots, at $2.15 per gallon, I could buy it in Peoria of the makers at, say, 30 cents per gallon in car-load lots, the good effect upon my business as a manufacturer would be very great ultimately; and, arguing from that, see what the effect would be on the total business of my estimate of 1,000,000 proof gallons or 532,000 gallons of neutral spirits.

Mr. Webb is in close relationship with several of the large Western distillers, and knows those who are in this enormous monopoly pretty well, and he doubtless, in a measure, presents them and their interests. I do not know them at all, but have so felt the influences of their combination that I would prefer a judgment upon probabilities to accepting their statements or estimates.

So much for my estimate of 1,000,000 proof gallons or 532,000 gallons of alcohol being annually used in this vicinity; and the estimates for other localities are based upon a similar line of probabilities and reasoning.

Messrs. Powers and Weightman, of Philadelphia, inform me privately that their consumption is over 800 barrels of alcohol annually; and this is the single statement upon which my estimate for that locality is based. There is one other manufacturer there possibly almost as large, and therefore consuming almost as much, namely, Messrs. Rosengarten & Sons.

If the house first named consumes 70,000 proof gallons, that alone is 8 per cent of my total estimate of 850,000 proof gallons; and if the house named second should consume 50,000 gallons, the two would reach 14 per cent of my estimate.

But there are several other large consumers for the manufacture of alcoholic products there and very many smaller ones, while the distribution of alcohol to the common purposes of life, other than for drinking, is large in proportion to the population, for in no city is alcohol more largely or more intelligently used in domestic economy.

With regard to Boston and Baltimore I have no facts to go on. But their railroad communication with Illinois forbids the supposition that they derive their main supply through New York. And as I frequently have fusel oil (a collateral residue from the distillation of alcohol) offered from Boston in large quantities, and often below New York prices, I must conclude there is a large trade in alcohol there that no one can do more than guess at.

Two large houses in Saint Louis distribute a large proportion of the alcohol used by manufacturers in that vicinity, and to many cities and towns west of that point, whose rate of consumption does not demand full carloads at one time. Their purchases were mentioned in confidence, and all that can be said is that these are the basis for the estimates for that vicinity.

And so on with all the other estimates given, except, perhaps, that these have less basis for computation.

I have not seen Mr. Webb's letters, to which you allude, nor his testimony given in Washington, but have heard of both from him. I am not familiar with the figures you give, and abstain from looking up the reports, in order to give an unbiased judgment.

There is much confusion introduced into this intricate subject by the use of different names. What I and some other manufacturers buy—the perfumers, for example—is not called alcohol, but from being cleaner and stronger than alcohol is called neutral spirits, or cologne spirit, or French spirit. Then comes alcohol of at least two grades of cleanness and strength, and then high wines, and finally whiskies; and these names are sometimes used to conceal as well as to distinguish quality. You speak of alcohol, while all my estimates are made in proof spirit—that is, half alcohol of a certain strength and half water—on which the tax is levied. Do your figures and mine apply to the same thing, or is there confusion here? You quote the annual production of alcohol for 1886 at 11,247,877 gallons. This would be about 21,000,000 proof gallons, or gallons of proof spirit. And you quote the consumption in the United States as being 8,994,287 gallons, presumably of alcohol. This would be about 16,900,000 proof gallons, and therefore not less, but much greater, than my estimate of 14,000,000 proof gallons for the total consumption in the United States for purposes other than drinking.

You say there is without doubt a considerable portion used in families for various purposes which could not properly be claimed as used in the manufacturing and mechanical arts. This portion is not only considerable, but is very large indeed, and should justly be taken into consideration in every estimate of the proportion used for economic purposes. Of the thousands of retail druggists, pharmacists, paint stores and general stores all over the nation, many sell three or four and few less than one or two barrels of druggists' alcohol a year, and none of this is used for drinking, but all for economic domestic purposes, having the same ultimate object and end as manufacturers have, and of more benefit and importance to the people than some manufactures. Hence this is all embraced in my estimates.

Again, comparatively few families are wholly without perfumery, and as many large firms in all the large cities manufacture the supplies for this large demand, and as

no other solvent is used in this manufacture except the highest grade of neutral spirits, the amount used must be very great. This is also embraced in my estimates.

Only alcohol of good strength can be used in dissolving gums, resins, and oils for the great number of laquers, varnishes, polishes, and sizings which go so largely into popular use; and the same is true for the large quantities used in the lamps and torches of artisans, and all these are also taken into account in making up my estimates.

Therefore, if there be 8,994,287 gallons of alcohol, equal to, say, 16,900,000 proof gallons of spirits, annually consumed in the United States, I consider the estimate that 14,000,000 gallons of this is used in economic manufactures and arts entirely disconnected from beverages as being both probable and rational.

Finally, if every user of alcohol, or spirit of any grade, is obliged to render a monthly account under oath to the collectors of internal revenue of all that he uses, as I have to do, the data must exist in the Commissioner's office for determining this question without any guesswork about it. But it must be borne in mind that the abolition of this tax would dismiss the force now used for its collection, and therefore that it is destructive to the interests of this office to aid in the abolition of the tax by furnishing such data.

I send another pamphlet which has some points that may interest you.

Very respectfully, yours,

E. R. SQUIBB.

Mr. WM. F. SWITZLER,
Bureau of Statistics, Treasury Department.

OFFICE OF JOHN F. HENRY & CO.,
New York, September 3, 1887.

DEAR SIR: At the annual meeting of the National Wholesale Drug Association, held last week in Boston, representing five hundred drug firms and fifty millions of capital, the following resolutions were adopted:

"Mr. Olcott. The next matter is the report of the committee on legislation. This able report has been read, and there is attached to it a recommendation of a resolution which the board of control now offer:

"*Resolved*, That the Bureau of Statistics at Washington be requested by the secretary of this association to ascertain from all sources practicable the percentage of spirits used in medicine and the arts; such information to be given to this association through its secretary, if possible, before the next meeting of Congress, so that body may act intelligently upon measures proposing the repeal of the internal-revenue tax on spirits."

I beg leave also to inclose herewith copies of the annual reports of the president of the association and the committee of legislation, which contain important information in regard to the excessive and "odious" war tax on alcohol, which for many years the druggists have labored in vain to have repealed. For every barrel of alcohol sold to the jobber for $100 the Government receives from the proceeds $80. This excessive tax has driven the manufacturing of perfumery from this country, France and Germany reaping the benefit.

Fifty thousand retail druggists and one hundred thousand cross-road storekeepers also ask to have this tax abolished, and if you do not feel at liberty to recommend Congress to "repeal the internal-revenue law" in full, I trust you will at least advocate the repeal of the law as far as alcohol is used in the arts and manufactures.

Dr. Squibbs, the famous chemist of this city, claims that "the proportion of spirits consumed in the arts is fully one-half the entire product."

If the law could thus be changed it would give great relief to the business of the country, and if the tax on whisky as a beverage be still maintained it would be a compromise the drug trade would be willing to accept.

Trusting you will give the matter your earnest consideration, I am, respectfully, yours,

HENRY E. BOWEN.

Hon. GROVER CLEVELAND,
President of the United States, Washington, D. C.

BROOKLYN, *October 10, 1887.*

SIR: Your favor of the 7th, asking for my estimate of the quantity of spirits used in medicine and the arts in the United States, is received.

In a pamphlet forwarded to you by this mail, at page 494, you will find an article written by me which gives such an estimate and the way in which it was reached.

Another pamphlet forwarded has also an article at page 946 in direct relation to this subject.

The estimate that one-half the spirits produced, exclusive of brandy, rum, wines, and malt liquors, is used in manufactures, medicines, arts, and daily small domestic uses, has been judged to be too high upon authority so good that I have revised it by estimates made in a different way, but as I do not know the total product of spirits, exclusive of brandy, rum, etc., I cannot give a proportional estimate, but only an estimate of what may be used for purposes other than as beverages.

I myself use about 35,000 proof gallons a year. By inquiry among others who are willing to give information on the subject, I judge there may be in New York, Brooklyn, Jersey City, Hoboken, and Newark twenty manufacturers and distributors who use as much as I do, or more, say 700,000 gallons. Besides these there are a great many manufacturers who use common "high wines" and whiskies in their processes which may altogether amount to, say 300,000 proof gallons, making up an estimate for this vicinity of, say, 1,000,000 proof gallons.

Information from one of the largest manufacturers in Philadelphia gives a consumption of about 70,000 gallons, and there can hardly be less than twelve times that quantity used and distributed for use from that vicinity, say 850,000 gallons.

Boston probably uses and distributes as much as Philadelphia, and Baltimore half as much, together, say 1,300,000 gallons.

Rochester, Buffalo, and Pittsburgh are all large consumers, and may together be estimated at not less than 1,000,000 gallons, making a total for the Eastern States of, say, 4,000,000 proof gallons.

Chicago, Cincinnati, St. Louis, New Orleans, and San Francisco must use and distribute annually hardly less, but probably more than an average of 1,000,000 gallons each—say 5,000,000 gallons.

The far more numerous other cities and towns who derive their supplies direct, and not through the distributing centers above named—as their number is over 100—may be estimated at 5,000,000 gallons, making a total of about 14,000,000 proof gallons.

(The remaining portion of the letter is not pertinent to the inquiry as to the per cent of spirituous liquors consumed in the arts and manufactures, and is therefore omitted.—Chief of Bureau.)

Very respectfully, yours,

E. R. SQUIBB.

Mr. WM. F. SWITZLER,
Bureau of Statistics, Washington.

NORWICH, CONN., *October 19, 1887.*

MY DEAR MR. SWITZLER: I have been so much occupied that I have been unable to return an answer to your inquiry of the 8th inst.

I now, however, send you a letter which you are at liberty to use if you think it desirable. Has your attention been directed to a series of papers I am contributing to the Popular Science Monthly, and to the Contemporary Review, of London, "On the Economic Disturbances since 1873?" I think you may find something in them to interest you.

I am yours, most respectfully,

DAVID A. WELLS.

W. F. SWITZLER, Esq.

Consumption of alcohol in the arts and manufactures. Letter from the Commissioner of Internal Revenue in regard to the consumption of alcohol in the arts and manufactures during the year ending June 30, 1887.

Inquiry is frequently made of this office in regard to the amount of alcohol consumed in the manufacturing and mechanic arts. The following letter from the Commissioner of Internal Revenue will, it is believed, afford to those interested the best information upon the subject.

From the preceding statement (No. 31) it will be seen that there were 69,597,036 gallons of domestic spirits consumed in 1887. The Commissioner states that, of this amount, alcohol withdrawn from distillery warehouses for all domestic purposes comprised 9,817,164 gallons, and estimates that of this amount about 5,000,000 gallons were withdrawn for use in the *arts and manufactures*, which would be only about 7.2 per cent of the entire consumption of domestic spirits in the United States during that year, which is about the same per cent so used as ascertained by the Internal Revenue Office in 1882.

TREASURY DEPARTMENT, OFFICE OF INTERNAL REVENUE,
Washington, D. C., December 6, 1887.

SIR: In reply to your letter of 3d instant, you are informed that in 1882 this office ascertained by special inquiry of the several collectors of internal revenue the quantity of alcohol used in the arts and manufactures during the year ended April 1, 1882.

The quantity was ascertained to be 4,269,978 gallons. During that fiscal year the quantity of alcohol withdrawn from distillery warehouses for all domestic purposes was 8,072,665 gallons.

The entire quantity so withdrawn during the fiscal year ended June 30, 1887, was 9,817,164 gallons.

As the quantity withdrawn for use in the arts and manufactures in 1882 was rather more than half the whole quantity withdrawn during the fiscal year, the quantity so used during the last fiscal year may be estimated at about 5,900,000 gallons.

I would not venture to say that the quantity so used was greater than 5,000,000 gallons.

Respectfully, yours,

JOS. S. MILLER, *Commissioner.*

Hon. WM. F. SWITZLER,
Chief of Bureau of Statistics.

TREASURY DEPARTMENT, BUREAU OF STATISTICS,
Washington, D. C., November 25, 1887.

DEAR SIR: Embodied in your letter to me of October 11, 1887, are copious extracts, printed from a former report of yours. Intending at the earliest practicable period to transmit to the National Drug Association copies of all letters which I have received on the subject of the per cent of spirituous liquors consumed annually in the United States in manufactures, arts, etc., I would be very much obliged, if convenient, that you would send me a copy of the report from which the extracts are taken, that I might utilize them in the copy of your letter which it is my purpose to furnish the association. In the transmittal use the slip inclosed, and oblige.

Respectfully, yours,

WM. F. SWITZLER, *Chief of Bureau.*

Hon. DAVID A. WELLS,
Norwich, Conn.

TREASURY DEPARTMENT, BUREAU OF STATISTICS,
Washington, D. C., October 8, 1887.

DEAR SIR: At the annual meeting of the National Wholesale Drug Association held in August last, at Boston, a resolution was passed requesting the Bureau of Statistics to ascertain, from all sources practicable, the percentage of spirits used in medicine and the arts. I have sought the opinions and cooperation of several gentlemen who have given special attention to this subject, to aid me in ascertaining the percentage requested; and, referring to your letter of April 9, 1887, and to your willingness therein expressed to afford this Bureau any assistance which you can in its inquiries, I am emboldened to ask that you give me your estimate of this percentage, and somewhat in detail your reasons for the same; also that you will allow me to furnish a copy of your letter to the National Wholesale Drug Association. Other letters of a similar character, written by those whose opinions I have solicited, will be furnished to that body.

Very respectfully, yours,

WM. F. SWITZLER, *Chief of Bureau.*

Hon. DAVID A. WELLS,
Norwich, Conn.

TREASURY DEPARTMENT, BUREAU OF STATISTICS,
Washington, D. C., December 3, 1887.

DEAR SIR: Your letter of the 2d instant is received. I have given you, I believe, copies of all the correspondence I have had with Hon. David A. Wells in regard to the inquiry asked to be instituted by the National Drug Association as to the amount of spirituous liquors consumed in the United States in the arts and manufactures, in one of which, I believe (April 9, 1887), he gives his reasons for the opinion he entertained on the subject while special commissioner of the revenue and the opinion he entertains now, under changed conditions. Be this as it may, I respectfully suggest that Mr. Wells himself can much better "account for the (alleged) contradiction" to which you refer than I can account for it, and that, therefore, a letter from you directly to him will, no doubt, elicit a full and satisfactory answer.

You will observe that Mr. Wells does not claim that he was at any time Commissioner of Internal Revenue, but simply special commissioner of the revenue. Nevertheless, at your suggestion and request, I have to-day addressed an inquiry to the present Commissioner of Internal Revenue for his opinion as to the amount of spir-

ituous liquors consumed in the arts and manufactures, and the reasons on which it is based, and if unable to furnish reliable data on the subject to favor me with the reasons of his inability to do so.

The Wholesale Drug Association can not more ardently desire "facts and figures" in respect to this subject than the Bureau of Statistics, and I shall cordially cooperate with the association in any effort to elicit them from reliable sources.

Permit me to add that the Bureau of Statistics of the Treasury Department has no interest whatever in the question of the policy or impolicy of modifying or abolishing the duty on ardent spirits, or as to what disposition should be made by Congress of the surplus—its only desire and function being to collect, formulate, and publish from all reliable sources at its command full and accurate statistics bearing upon the economical problems which are of interest to Congress and the people, and to submit such statistics without note or comment.

As soon as a reply is received from the Commissioner of Internal Revenue I will furnish you a copy, together with a copy of my letter which elicits it.

Respectfully, yours,

WM. F. SWITZLER, *Chief of Bureau.*

HENRY E. BOWEN, Esq.,
No. 24 College Place, New York.

TREASURY DEPARTMENT, BUREAU OF STATISTICS,
Washington, D. C., December 3, 1887.

SIR: At a recent session of the National Wholesale Drug Association a resolution was passed requesting this Bureau to investigate and report to the association the amount of alcoholic liquors annually consumed in the United States in the arts and manufactures. Pursuant to this request I addressed various gentlemen presumably competent to give intelligent opinions on this question, and the reasons on which their opinions are based. Letters have been received from these gentlemen and furnished to the association.

A request now comes from the officers of the association to whom the letters were transmitted that I make inquiry of the Commissioner of Internal Revenue, which I herewith beg leave to do.

If it is shown by the records of your office, I shall be obliged if you will inform me as to the amount of spirituous liquors consumed in the arts and manufactures in the United States during the most recent years for which you have the data.

If your records do not disclose this information, I shall consider it a favor if you will give me your estimate in answer to the above inquiry, and the reasons upon which it is based.

Hoping you will make reply at your earliest convenience, I am,

Respectfully, yours,

WM. F. SWITZLER, *Chief of Bureau.*

Hon. JOSEPH S. MILLER,
Commissioner of Internal Revenue, Treasury Department.

TREASURY DEPARTMENT, BUREAU OF STATISTICS,
Washington, D. C., November 29, 1887.

DEAR SIR: On the 3d of September, 1887, you transmitted to the President of the United States a resolution adopted at the last annual meeting of the National Wholesale Drug Association, held in Boston, with the request "that the Bureau of Statistics be requested to ascertain from all sources practicable the percentage of spirits used in medicine and the arts, such information to be given to this association, through its secretary, if possible, before the next meeting of Congress, so that body may act intelligently upon measures proposing the repeal of the internal-revenue tax on spirits."

Your letter, accompanied by this resolution, together with copies of the annual reports of the president of the association and the committee on legislation, were referred by the President of the United States to the Secretary of the Treasury, and by the latter officer to this Bureau.

Since the receipt of your letter and accompanying papers I have given such attention to the inquiry as time and opportunity afforded, and herewith inclose to you the result. You are doubtless aware that there is in existence no reliable statistical information on the subject, and that therefore the only available source of intelligence at my command was to seek the opinions of gentlemen interested in the question and, presumably, very competent to give opinions entitled to respect and consideration.

Previous to the receipt of your letter, and in my quarterly report No. 2, series 1886-'87, pages 397, 398, and 399, I published communications bearing upon your inquiry from Mr. James A. Webb, 165 Pearl street, New York City, in which he gave it as his opinion that the entire quantity of distilled spirits entering into consumption annually in the arts and manufactures is less than 10 per cent of the whole quantity annually produced. I herewith inclose a copy of my quarterly report, containing the letters of Mr. Webb.

On the receipt of your communication from the President, through the Secretary of the Treasury, I addressed letters of inquiry, October 7 and October 8, 1887, to Dr. Edward R. Squibb, Brooklyn, N. Y., and Hon. David A. Wells, Norwich, Conn., the design of which was to elicit their opinions and the reasons on which they were based in respect to the problem you submitted. In order that you may see the scope and character of the inquiries made of these gentlemen, I inclose to you copies of my letters to them.

I also inclose copies of their replies, and of the correspondence with Dr. Squibb which followed the receipt of his first letter.

From these several very full and satisfactory studies of the question you, of course, will deduce your own conclusions as to the per cent of distilled spirits annually consumed in the United States in the arts and manufactures, my previous impression that the amount was about 10 per cent being confirmed by them.

Respectfully, yours,

WM. F. SWITZLER, *Chief of Bureau.*

MR. HENRY E. BOWEN,
No. 24 College Place, New York City.

TREASURY DEPARTMENT, BUREAU OF STATISTICS,
Washington, D. C., December 7, 1887.

DEAR SIR: In redemption of the promise made you in my letter of the 3d instant, I inclose to you a copy of the letter I on that day addressed to Hon. Joseph S. Miller, Commissioner of Internal Revenue, Treasury Department, and a copy of his reply just received, relative to the quantity of alcohol used in the arts and manufactures in the United States, from which you will see that he estimates the amount so used during the fiscal year ending June 30, 1887, at about 5,000,000 gallons, or 7.2 per cent of the amount produced in the United States.

The amount of domestic distilled spirits withdrawn from distillery warehouses for consumption during the said year was 68,385,504 gallons: the amount of alcohol withdrawn for all domestic uses, 9,817,164 gallons; estimated amount withdrawn for use in the arts and manufactures, about 5,000,000 gallons, or 7.2 per cent of the domestic product.

Respectfully, yours,

WM. F. SWITZLER, *Chief of Bureau.*

HENRY E. BOWEN, Esq.,
No. 24 College Place, New York.

BUREAU OF STATISTICS,
Washington, D. C., October 7, 1887.

SIR: At the recent annual session of the National Wholesale Drug Association, held in Boston, a resolution was adopted requesting the Bureau of Statistics, Treasury Department, "to ascertain from all sources practicable the percentage of spirits used in medicine and the arts," and to report such information to the association, if possible, before the next meeting of Congress, "so that body may act intelligently upon measures proposing the repeal of the internal-revenue tax on spirits."

You have, as I understand, given special attention to the subject; the National Wholesale Drug Association requests this Bureau to investigate, and therefore I would be very much obliged if, at your earliest convenience, you would give me your estimate as to the percentage of spirits used annually in the United States in medicine and the arts, and the reasons somewhat in detail upon which your estimate is based.

I also ask your permission that I may furnish a copy of your letter to the National Wholesale Drug Association. Inquiries similar to the above have been submitted to other gentlemen who have given more or less attention to the subject, and a similar request made of them in regard to their replies.

Respectfully,

WM. F. SWITZLER, *Chief of Bureau.*

DR. EDW. R. SQUIBB,
Brooklyn, N. Y.

TREASURY DEPARTMENT, BUREAU OF STATISTICS,
Washington, D. C., October 11, 1887.

DEAR SIR: I acknowledge, with thanks, the receipt of your letter of the 10th instant, in answer to mine of the 7th, asking for your estimate of the quantity of spirits used in medicine and the arts in the United States, together with the two pamphlets referred to in your reply.

I have read your letter and the portions of the pamphlets to which my attention is called with much interest, although a large portion of your letter, instructive and profitable as it is, as well as a large portion of the articles published in the pamphlets, are not pertinent to the inquiry which I made.

The portions of each which I deem not germane to the question propounded to this Bureau by the National Drug Association relate to a discussion of the question of the reduction or abolition of the internal-revenue tax upon distilled spirits. That portion of each, however, which relates to a discussion of the percentage of spirits used in medicine and the arts in the United States, and the reasons for the estimate, I shall take the liberty of using in my reply to the Drug Association.

Again thanking you for the fullness, candor, and promptness with which you have replied to my inquiry, I am,

Most respectfully, yours, WM. F. SWITZLER, *Chief of Bureau.*

DR. E. R. SQUIBB,
No. 56 Doughby Street, Brooklyn, N. Y.

TREASURY DEPARTMENT, BUREAU OF STATISTICS,
Washington, D. C., October 21, 1887.

DEAR SIR: I am in receipt of your letter of the 17th instant, also of the pamphlet to which you refer.

I am very much obliged for the trouble you have taken to answer my several letters and for allowing me to furnish copies of yours so far as they relate to the inquiry propounded to me by the National Drug Association.

I will add with respect to Mr. James A. Webb that it was my intention to convey the idea that he, from his position as one of the leading dealers in the article of alcohol, keeps himself thoroughly informed as to the amount manufactured in the country, where it is manufactured, and so far as possible where it is sold or distributed. This would give him good facilities for making an estimate as to the amount consumed. It was not my intention to convey the idea that Mr. Webb distributed the greater portion of the product.

Respectfully, yours, WM. F. SWITZLER, *Chief of Bureau.*

DR. E. R. SQUIBB, *Brooklyn, N. Y.*

German law in regard to alcohols used for industrial purposes.

ARTICLE 1. Alcohol which is to be used in the arts, vinegar making included, or for medical and scientific purposes, or for cleaning, polishing, heating, cooking, and lighting, pays no tax.

ART. 2. All alcoholic products which may be used for drinking are not exempt from taxes.

ART. 3. Exemption from taxes is only granted after the alcohol has been rendered unfit for drinking.

Should such treatment be found to be inexpedient for certain manufacturing or medical purposes, it may be supplanted by an appropriate system of Government supervision.

ART. 4. The menstruum to be used in such treatment is the one described in article 8, if there is not a special permit to use substitutes (article 10).

ART. 5. Persons wanting to employ a different menstruum (and claiming exemption from taxes) have to apply at the respective offices by letter stating location of storehouse and intended use. The office grants the permission after previous examination, reserving to itself the right of withdrawal at any time. To persons who have been previously convicted for offenses against the tax laws the request may be denied.

ART. 6. Persons contemplating this treatment of alcohol have to report to the respective office. They have to supply the necessary menstruum as well as the necessary appliances and workmen.

ART. 7. Alcohol of less than 80 per cent Tr., or alcohol which is perfumed or contains any other substances, is excluded from the privileges of this article. No less than 100 liters can been treated.

ART. 8. The menstruum for general use consists of 9 parts of wood alcohol and 1 part of pyridine bases. Three liters of this mixture are added to 100 liters of pure alcohol. The substance named must stand the tests described in the appended supplement.

ART. 9. Only such menstrua may be used as have been produced in designated factories under Government supervision, tested by a Government chemist, and kept in vessels bearing the Government seals. Suitable vessels of glass, earthenware, and metal only are allowed. In case the seal is broken the chief office may allow the use of the contents of the vessel, if the breaking may be supposed to have happened accidentally and the chemist's examination proves the menstruum to be of the right composition. The owner pays for this examination.

Manufacturers who have been privileged to manufacture the menstruum must admit the Government officers and chemists to the rooms where the compound is made and stored. The chief revenue officers are entitled to an inspection of all the books relating to the manufacture and shipping of the compound. A suitable room must be reserved, equipped with all the apparatus and reagents needed for testing the menstruum and its components, also necessary assistance has to be furnished.

ART. 10. Manufacturers may be allowed to mix alcohol for their own use with one, half liter of pyridine bases (of the prescribed quality) to 100 liters of pure alcohol under such limitations as are described in article 9.

In the manufacture of vinegar this percentage of pyridine bases may be substituted by a mixture of 100 per cent of water and 100 per cent of vinegar, containing 6 per cent of acetic acid (the hydrate), or of 100 per cent of water and 50 per cent of vinegar, containing 12 per cent of acid. In calculating the amount of water to be added any excess of vinegar previously added and the quantity of water contained in the alcohol may be taken into consideration if the manufacturer wishes so. Even water, beer, or yeast water may be substituted. Until further notice the following menstrua may be used:

In the manufacture of—

a. All kinds of lacquers and varnishes (on the premises where the alcohol is treated): 1.2 per cent of spirits of turpentine.

b. Fulminate of mercury: 1.2 per cent of spirits of turpentine or 1.4 per cent of bone oil.

c. Aniline dyes: 1.4 per cent of bone oil.

d. Chemicals.

(1) Alkaloids: 1.2 per cent of spirits of turpentine or 1.4 per cent of bone oil.

(2) Medical extracts, as f. i. jalap or scammony resin: 1.2 per cent of spirits of turpentine.

(3) Chloroform, iodoform, sulphuric ether, antipyrine from acetic ether, hydrate of chloral: 1.4 per cent of bone oil.

(4) Collodion, tannic acid, salicylic acid, and salicylates: 10 per cent of sulphuric ether.

(5) White lead and acetates (sugar of lead): 1.4 per cent of bone oil.

The above-described ways of treatment may take place solely for the reported purpose and in the factory of the applicant. The sale of such alcohol is admissable.

ART. 11. The mixing takes place either at the Government domicile, or, on application, at the place of business of the respective manufacturer, distiller, or wholesaler, in the presence of two revenue officers, one of whom should be one of high rank as a rule. The officers have to pay special attention that the alcohol be not previously sophisticated, and that the mixing be performed in a thorough manner. If there is no revenue office in the place where the applicant is in business he has to bear the whole expenses of the officers' visit, provided they have no other functions to perform in the place and are not on one of their regular trips.

The mixing is done in conformity with the regulations on ascertaining the strength of alcohol, and those quantities of alcohol for which a rebate is claimed when exported.

ART. 12. All manufacturers, with exception of the vinegar makers, who have been granted permission to employ menstrua different from the ordinary, have to keep a book, which accounts for all the alcohol coming in and going out. This book must be accessible to the revenue inspectors at any time. On request of the office a statement must be furnished. At least once annually an official inventory must be taken. In the case of discrepancies up to 10, 0–0, the taking of legal steps is left to the discretion of the office.

If the interests of the revenue department should demand it wholesalers, too, and such manufacturers as use the ordinary menstruum, may be ordered to keep such a book.

ART. 13. Alcohol mixed with a special menstruum can only be stored in the reported

place. In all those cases where the keeping of a special book has been ordered (article 12) it may be directed to store all the alcohol treated with the ordinary menstruum in one place, the location of which has to be reported.

ART. 14. Manufacturers using mixed alcohol, who at the same time are engaged in a business where pure alcohol is employed for which a return of the tax paid is not asked (for instance, manufacturers of liquors), are obliged to keep the branches entirely separate. The same applies to manufacturers who use in one department alcohol mixed with the ordinary menstruum and in another department alcohol treated with a special one.

Exceptions may be granted by the revenue department, provision to be made for due supervision.

ART. 15. The officers of the revenue department have the right to enter the places at any time where mixed alcohol is used, stored, or sold, to inspect the supplies and to take samples.

The interested parties are obliged to render the necessary assistance, and, on request, to show the supplies and state their quantity according to special information of the department. Any desired information on the management of affairs must be given to the officers; the chief officers, besides, must be allowed access to the books, bills, etc., on their request.

ART. 16*a*. Vinegar makers are allowed to have alcohol of less than 80, 0–0 tralles treated. The limit is 35, 0–0.

b. In the building where vinegar is prepared, or in the adjoining buildings, no still is allowed. In cases of necessity the department may grant exceptions and establish due supervision.

c. If it is intended to mix alcohol for the manufacture of vinegar with water and vinegar, the application must be written on the blank of specified form.

In this case there must be an immovable vessel in the establishment, standardized by the Department and provided with a gauge for reading off the level. The testing of the vinegar to be added to the alcohol is performed as described in the appended supplement.

ART. 17. Treats of the bookkeeping of the Government's offices.

ART. 18. Of the penalties.

ART. 19. Treats of regulations for the period of transition up to October 31, 1887, when the above provisions become a law.

MY DEAR SIR: I have corresponded with my colleagues on the National Academy Commission regarding the "denaturalizing" of alcohol by the addition to it of 2 per cent wood spirit and 1 per cent of a mixture of pyridine bases.

A report in the Chemiker Zeitung for April 18 seems quite favorable, and I think the committee, if now consulted by the Internal-Revenue Department, would be disposed to favor this mode of rendering alcohol indrinkable.

Our report was made to the Internal-Revenue Department in September, 1882, and was printed in the report of the National Academy of Sciences for 1883.

Yours, very truly,

GEORGE F. BARKER.

EMIL KIPPER, Esq.

STATEMENT OF MADDUX, HOBART & CO., OF CINCINNATI, OHIO.

Permit us to say in reference to the proposed bill allowing methylated alcohol to be sold without payment of tax, and also the use of alcohol by manufacturing chemists in bond, without tax, that it is of the utmost importance to all distillers that all safeguards for the Government revenue should be maintained, and that under no circumstance should any spirits be allowed to go into consumption for drinking purposes without paying the tax; but we are convinced by long experience that it is entirely practicable to permit the use of untaxed spirits in this manner, and with no injury to anyone.

The use of alcohol would doubtless be largely increased in an entirely legitimate manner, and the revenue to the Government would only be reduced in the direction it desires to effect a reduction. We think the bill we have seen, with such guards as the experience of the Commissioner of Internal Revenue and Secretary of the Treasury would throw around it, an entirely safe one for the Government and am sure that the trade would heartily approve it.

The Government now allows alcohol to be used free of tax by manufacturing chemists for export with perfect safety, and the same regulations would protect it if used in preparations to be sold on the home market, and there is no reason why methylation should not so perfect as to entirely preclude the possibility of a separation after being allowed to go on the market, and the stringent laws now preventing spirits other than tax-paid from being sold will be of equal force here.

STATEMENT OF McPIKE & FOX, OF ATCHISON, KANS.

ATCHISON, KANS., *June 22, 1888.*

SIR: We would most respectfully ask that alcohol and spirits for manufacture and the arts be make absolutely free of internal-revenue tax. We pay a tax of $40,000 annually on alcohol alone; 99 per cent of this would be saved to our customers by the passage of such a bill as we refer to. It appears to us that such a step toward the reduction of the "surplus" would directly benefit a great number of people and and injure no one.

ISOBUTYLIC ALCOHOL.

STATEMENT OF EMIL KIPPER, OF ADAMS, MASS.

We desire your assistance in placing isobutylic alcohol (compound of fusel oil) at same rate of duty for import as fusel-oil (amylic alcohol). I omitted to include propylic alcohol, although mentioned in this letter as a minimum compound of commercial isobutylic alcohol. Briefly, as "fusel oil" is a generic rather than a strictly chemical term, whose components are, respectively, amylic alcohol, isobutylic alcohol, and propylic alcohol, in proportions varying according to the vegetable material used in fermentation, each of like poisonous properties, but differing in odor and boiling points, we ask that these compounds of fusel oil, as mentioned, be rated same as fusel oil—i. e., the compound itself whence they are derived—viz, 10 per cent ad valorem.

Unless each separate alcohol I have listed be designated by name in any new schedule, appraisers are apt to misinterpret, feeling it to be their duty to levy the highest tax, no matter how logical or obvious the intention of the legislator may appear. Whether the tax on alcohols used in the arts be modified or abolished, we desire that, so far as our manufacture is concerned, these alcohols be designated separately in the new schedule, whatever duty or if no duty be levied.

I hope that I do not trouble you too much in this matter.

ALCOHOL IN THE ARTS.

THE DEPOTABILIZATION OF ALCOHOL.

[Translated by Prof. Charles F. Kroeh, Stevens Institute of Technology, Hoboken, N. J.]

In reference to rendering alcohol unfit for use as a beverage the Bundesrath (federal council) enacted as follows, in its session of June 21, 1888:

(1) The composition of the general agent for rendering alcohol unfit for drinking, according to the sense and meaning of the regulation concerning the removal of duties on alcohol for industrial and other purposes, prescribed by the act of the Bundesrath of December 15, 1887, remains in force until further notice.

(2) Instead of the provisions hitherto in force concerning the nature of the components of the general agent (Appendix R^2 of the regulation) the directions of Appendix A will take effect. But until December 31, 1888, methyl alcohol and pyridine bases answering the previous requirements as to their nature and constitution may be used.

(3) The methyl alcohol and the pyridine bases shall be tested according to the directions of Appendix B to determine whether their composition corresponds to the requirements.

(4) The manufacturers authorized to prepare the general agent for the treatment of alcohol may add to it 40 grams of oil of lavender or 60 grams of oil of rosemary per liter. These additions shall also be examined by an expert chemist appointed for the purpose, according to the provisions of the act directing the examination of the substances added to alcohol.

(5) It is forbidden: (*a*) To separate this agent wholly or in part from alcohol treated with it, or to add substances to it, except those of article 4, which would alter the effect of the agent on the taste or odor; (*b*) to sell or offer for sale alcohol (which has been treated as explained under *a*), except as provided for in article 4. Dealers in prepared alcohol are required to exhibit a printed copy of the above prohibition in plain view in their stores.

(6) Persons engaged in arts and manufactures may treat such alcohol as they require in their own business with 5 per cent methyl alcohol constituted as prescribed, instead of the general agent or the pyridine bases (section 10 of the regula-

tion). The circumstances under which this substitution is admissible will be found under the provisions of section 9 of the regulation.

(7) In like manner and without the limitations of section 19 of the regulations hitherto in force, dealers may cause alcohol to be mixed with 5 per cent of methyl alcohol for the purpose of selling to persons engaged in the industrial arts, and the latter may be authorized to purchase their supplies of such alcohol from dealers if they so desire. The directions which have hitherto governed such transactions will continue in force.

(8) Persons engaged in the manufacture of lacquers and varnishes may be permitted to mix the alcohol used in such manufacture with ½ per cent of oil of turpentine whether such lacquers and varnishes are designed for consumption by the maker himself or for sale. (Section 10.)

(9) For the preparation of brewers' coating or lining the alcohol may be mixed with 20 per cent of a solution of 1 part by weight of shellac and 2 parts by weight of 95 per cent alcohol.

The alcohol used in the preparation of this shellac solution shall be free of duty.

(10) Alcohol may also be treated: (*a*) For the preparation of the following chemicals: The alkaloids, extracts used as medicine, such as jalap resin and scammonium, chloroform, iodoform, ethyl tartrate, chloral hydrate, sulphuric ether, acetic ether for use in the arts (compare No. 11), collodion, tannin, salicylic acid and salicylates, white lead and acetates (sugar of lead), with ½ per cent of oil of turpentine, or with 0.025 per cent of animal oil, or 10 per cent of sulphuric ether; (*b*) for the production of lakes (japans, varnishes), with ½ per cent of oil of turpentine or 0.025 animal oil; (*c*) for chemical examination of sugar beets in sugar refineries to determine the amount of sugar they contain, with 0.023 per cent of animal oil.

The provisions *d* (Nos. 1 to 5 in section 10 of the regulation) are hereby repealed.

(11) The alcohol used in the preparation of acetic ether intended for industrial purposes shall be free of duty only under the condition that the use and consumption of the acetic ether be subject to control, besides the regular treatment of the alcohol according to No. 10*a*.

(12) The animal oil, the oil of turpentine, the sulphuric ether, and the shellac solution which are to be used to mix with alcohol must answer to the requirements of Appendix C for chemical examination.

In case of need, such examination shall be made at the cost of the manufacturer or dealer by an officially appointed chemist.

(13) Alcohol used for the manufacture of vinegar may also be mixed with 200 per cent of vinegar containing 3 per cent of acetic acid (acetic hydrate), or with 30 per cent of vinegar containing 6 per cent of acetic acid (acetic hydrate), 70 per cent of water, and 100 per cent of beer. For the same purpose, 100 per cent of pure natural wine may be added to the alcohol instead of water, beer, or yeast water, along with the prescribed quantity of vinegar.

(14) The highest financial authority of the country may permit the treatment of less than 100 liters of alcohol in case of necessity, but not less than 50 liters. (Section 7 of the regulation.)

(15) The act of the Bundesrath of September 17, 1887 (see Centralblatt of 1887, p. 351), concerning admissible exceptions to the temporary provisions of the law of June 24, 1887, relating to duties on alcohol, will become inoperative at the end of the year 1888 in so far as it affects the regulation concerning the removal of duties on alcohol for industrial and other purposes.

JACOBI,
For the Imperial Chancellor.

APPENDIX A.

Nature of the components of the general modifying agent.

(1) *Methyl alcohol.*—The methyl alcohol shall be colorless or slightly yellowish. On distilling 100 volumes of methyl alcohol, at a normal barometric pressure of 760 millimeters, and up to a temperature of 75° C., at least 90 volumes should pass over. The methyl alcohol should mix with water in any proportion without materially troubling it. It should not contain more than 30 per cent of acetone. It should contain at least 1 per cent and not more than 1.3 per cent of constituents which decolorize bromine.

(2) *The pyridine bases.*—The mixture of pyridine bases should be colorless or slightly yellowish. It should not contain more than 10 per cent of water. On distilling 100 volumes of the mixture at the normal barometric pressure of 760^{mm} and up to a temperature of 140° C. at least 90 volumes should pass over. The mixture should be free from ammonia and should mix with water in any proportion without materially rendering it turbid.

APPENDIX B.

Directions for testing methyl alcohol and the pyridine bases.

I. METHYL ALCOHOL.

(1) *Color.*—The color of the methyl alcohol shall not be darker than that of a solution of 2 cubic centimeters of one-tenth normal iodine solution in 1 liter of distilled water.

(2) *Boiling point.*—Introduce 100 cubic centimeters of methyl alcohol in a metallic retort provided with distilling tube and bulb and connected laterally with a Liebig's condenser. An officially-tested centigrade thermometer is introduced in the upper opening in such a way that its bulb reaches below the lateral opening. The retort is heated so gently that the distillate leaves the condenser in drops. The distillate is received in a graduated glass cylinder, and, when the thermometer indicates 75° at the normal barometric pressure, at least 90 cubic centimeters should have passed over. If the barometric pressure is not normal, 1° should be allowed for every 30 millimeters. Thus 90 cubic centimeters should pass over at 770 millimeters and 75.3°, or at 750 millimeters and 74.7°.

(3) *Miscibility with water.*—With 40 cubic centimeters of water 20 cubic centimeters of methyl alcohol should yield a clear or only faintly opalescent mixture.

(4) *Separations with soda lye.*—On shaking 20 cubic centimeters of methyl alcohol with 40 cubic centimeters of soda lye of 1.3 specific gravity, at least 5 cubic centimeters of methyl alcohol should separate after half an hour.

(5) *Proportion of acetone.*—One cubic centimeter of a mixture of 10 cubic centimeters methyl alcohol with 90 cubic centimeters of water is shaken in a narrow burette with 10 cubic centimeters double normal soda solution (80 grams of sodium hydroxide in 1 liter). Then 5 cubic centimeters of a double normal iodine solution (254 grams of iodine to the liter) are added under renewed shaking. The iodoform which separates is taken up by vigorously shaking with 10 cubic centimeters of ether of 0.722 specific gravity. After standing for a short time, a layer of ether separates, and of this 5 cubic centimeters are transferred to a weighed watch glass by means of a pipette. They are then slowly evaporated. Finally the watch glass is placed over sulphuric acid for two hours and weighed. The gain in weight should not be less than 0.07 gram.

(6) *Capacity for bromine.*—One hundred cubic centimeters of a solution of potassium bromate and potassium bromide, prepared as directed below, are mixed with 20 cubic centimeters of dilute sulphuric acid, for the preparation of which directions are also given. To this mixture, which represents a bromine solution of 0.703 gram bromine, methyl alcohol is added drop by drop, under constant stirring, from a burette graduated to 0.1 cubic centimeter until the color is permanently discharged. This result should require not more than 30 cubic centimeters and not less than 20 cubic centimeters of methyl alcohol. These bromine tests must always be made in full daylight.

DIRECTIONS FOR PREPARING THE CONSTITUENTS OF THE BROMINE SOLUTION.

(*a*) *Bromine salts.*—Two and four hundred and forty-sevenths grams potassium bromate and 8.719 grams potassium bromide previously tested for purity are weighed off after drying for at least two hours at 100° and cooling in the desiccator, and are then dissolved in water and diluted to 1 liter.

(*b*) *Dilute sulphuric acid.*—One volume of concentrated sulphuric acid is mixed with 3 volumes of water. The mixture is allowed to cool.

II. PYRIDINE BASES.

(1) *Color* as with methyl alcohol.

(2) *Behavior to cadmium chloride.*—To 10 cubic centimeters of a solution of 1 cubic centimeter pyridine bases in 100 cubic centimeters of water are added 5 cubic centimeters of a 5 per cent solution in water of anhydrous melted cadmium chloride, and the mixture is vigorously shaken. A distinctly crystalline precipitate should separate at once. Ten cubic centimeters of the same solution of pyridine bases should give a white precipitate with Nessler's reagent.

(3) *Boiling point.*—Proceed as with methyl alcohol, but the temperature should rise to 140°, and then we should have at least 90 cubic centimeters of distillate.

(4) *Miscibility with water.*—As with methyl alcohol.

(5) *Proportion of water.*—On shaking 20 cubic centimeters of bases and 20 cubic centimeters soda lye of 1.4 specific gravity, at least 18.5 of the bases should separate after standing for a while.

(6) *Titration of the bases.*—To 1 cubic centimeter of the pyridine bases dissolved in 10 cubic centimeters water is added normal sulphuric acid until a drop of the mixture

produces a distinct blue edge on Congo paper, which immediately disappears again. Not less than 10 cubic centimeters of the acid solution should be required to produce this reaction.

To prepare Congo paper, filter paper is passed through a solution of 1 gram of Congo red in 1 liter of water and dried.

APPENDIX C.

Directions for the examination of animal oil, oil of turpentine, and ether.

I. ANIMAL OIL.

(1) *Color.*—The color of the animal oil should be blackish brown.

(2) *Boiling point.*—If 100 cubic centimeters are distilled in the manner described for methyl alcohol, not more than 5 cubic centimeters should pass over below 90° and at least 50 cubic centimeters should have passed over by the time the temperature has risen to 180°.

(3) *Pyrrol reaction.*—Two and five-tenths cubic centimeters of a 1 per cent alcoholic solution of the animal oil are diluted to 100 cubic centimeters with alcohol. If a pine shaving moistened with concentrated hydrochloric acid is placed in 10 cubic centimeters of this solution, which contain 0.025 per cent of animal oil, it should exhibit a distinct red coloration after a few minutes.

(4) *Behavior to mercury chloride.*—A voluminous flaky precipitate should be immediately produced on mixing 5 cubic centimeters of a 1 per cent alcoholic solution of animal oil with 5 cubic centimeters of a 2 per cent alcoholic solution of mercury chloride. A distinctly visible turbidity should be observed immediately after mixing 5 cubic centimeters of even a 0.025 per cent alcoholic solution of animal oil with 4 cubic centimeters of the solution of mercury chloride.

II. OIL OF TURPENTINE.

(1) *Specific gravity.*—The specific gravity of the oil of turpentine should be between 0.855 and 0.865 at 15°.

(2) *Boiling point.*—On distilling 100 cubic centimeters in the manner indicated for methyl alcohol, not more than 5 cubic centimeters should pass over below 150°, but at least 90 cubic centimeters by the time 160° is reached.

(3) *Miscibility with water.*—Twenty cubic centimeters of oil of turpentine are vigorously shaken with 20 cubic centimeters of water. When the two layers have separated, after standing for awhile and have become clear, the upper one should contain at least 19 cubic centimeters.

III. ETHER.

(1) *Specific gravity.*—The specific gravity of ether should not be greater than 0.730.

(2) *Miscibility with water.*—Twenty cubic centimeters of ether are vigorously shaken with 20 cubic centimeters of water. After complete separation the layer of ether should contain at least 19 cubic centimeters.

IV. SHELLAC SOLUTION.

On evaporating 10 grams of the solution on a water bath and subsequent heating the residue in a drying oven for half an hour at a temperature of 100° to 105°, at least 3.3 grams of shellac should be obtained.

ALCOHOL.

THE DEPOTABILIZATION OF ALCOHOL BY THE ADDITION OF WOOD SPIRITS AND PYRIDINE.[1]

BY PROF. DR. A. W. VON HOFMANN, DR. G. KRÄMER, AND DR. L. LOEWENHERZ.

I.

The use of depotabilized alcohol, for industrial purposes only, was permitted up to October 1, 1887, under certain revenue restrictions. When the tax on spirits was considerably increased, a little more than a year ago, it became desirable to permit the use of free alcohol on as large a scale as possible. It seemed especially necessary to render the use of depotabilized alcohol possible for household purposes. As, however, such use can not be controlled by the revenue authorities, the former agent

[1] Translated by Prof. Charles K. Kroeh, Stevens Institute of Technology, Hoboken, N. J., from "Die Chemische Industrie," Berlin, May 1, 1889.

(5 per cent of wood spirit) could no longer be retained, because this substance is useful only when the consumption can be properly supervised.

Under these circumstances, and on the basis of what had been proposed to the imperial treasury department by the writers of this report, it was decided to treat the alcohol with a mixture of wood spirit and pyridine. We considered a mixture of 2 per cent of wood spirit and at most one-half per cent of pyridine to be sufficient for this purpose, but the authorities raised the proportion of pyridine to 1 per cent with the view of securing the revenue against fraud. After a few months, however, the federal council (Bundesrath) decreased the addition of pyridine, December 15, 1887, to one-half per cent.

With the introduction of the high tax on spirits, depotabilized alcohol, that is to say, a liquid differing essentially from pure alcohol in smell and taste, took the place of the latter for numerous household and industrial purposes for which pure spirits had been used exclusively before. It was to be foreseen that this innovation would give rise to various complaints.

These were not entirely unwarranted, especially when the higher percentage of pyridine was used; and it was the order of the day to paint the new legislation concerning taxes on spirits as black as possible and to print monstrous exaggerations in the newspapers. Journalists, that were particularly anxious about the welfare of their fellow-citizens, told many stories of the dreadful effects of the doctored alcohol in the sick room and the nursery. These reports did not fail to excite the imagination of their readers, and the consequences of the excessive drinking of unsophisticated liquor by a workman who took a Monday off were but too frequently attributed to the effects of the depotabilized spirits which he had to use in his business on the following Tuesday. Indeed, it was not difficult to find some physicians, even, who thought they had discovered in pyridine the source of all ailments.

Under these circumstances it would have been strange if a considerable number of experts had not come forward suggesting substitutes, which were far superior to the mixture of wood spirit and pyridine in their opinion. Who would blame many of these advisers for dreaming of some great national reward, although they had but a hazy conception of the qualities requisite for an agent intended to render alcohol unfit for use as a beverage? Some of the substances proposed could be separated as a sediment from the alcohol with which they were mixed by simply diluting it to the strength of ordinary whisky. On carefully examining the numerous new substances proposed, it must be confessed that their advocates, with few exceptions, which we shall consider further on, had not devoted the slightest attention to the details of the problem of treating alcohol so as to make it undrinkable; and this is all the more surprising as the journal of the "Verein zur Beförderung des Gewerbefleisses" (society for the promotion of industry) as early as 1881 comprehensively discussed the various properties such agents should have in order to meet the requirements of the arts.

It is not intended to repeat these statements here in detail; it will suffice to bring together in a few words the different points of view from which agents for the treatment of spirits must be selected, and to deduce from them the reasons for the directions which have been promulgated.

In selecting a suitable agent for depotabilizing alcohol care must be taken, above all, that it possesses the following properties:

(1) When added in the proper proportion it must render the alcohol unfit for human consumption.

(2) Its price must be so low that the cost of depotabilization may amount to but a small fraction of the tax remitted.

(3) It should be difficult and very expensive to separate from the alcohol to which it has been added.

(4) There must exist a simple and easy process for determining with certainty the presence of the agent in alcoholic liquors.

(5) Finally, the agent must not seriously impair the usefulness of the alcohol to which it is added for the special purposes for which alcohol so treated shall be permitted to be used.

Substances which render alcohol undrinkable when mixed with it exist in large number. The cost of treatment as compared with the saving in taxes is of secondary importance, although cheapness should be aimed at in order to increase the quantity consumed in domestic and industrial uses. It is not so easy, however, to find an agent which unites the last three conditions named above.

Let us first consider the alcohol which is to be used commercially without supervision by the revenue authorities. To this category belongs not only the alcohol used in the household, that is to say, for burning and cleaning, but also a large portion of that used in small manufacturing concerns. In many cases, and particularly in places where many of these concerns of the same kind are massed together, it will be possible to introduce a certain system of official control, and therefore to use substances which do not so strictly conform to the above requirements. A large num-

ber of small manufacturers will, however, still remain in whose case official control is as little practicable as in households that use depotabilized alcohol.

If such alcohol is allowed to be used freely without official supervision, it should not be easy to make it drinkable again. The separation of the agent must therefore be as difficult as possible. According to our present experience it is probably impossible to find a substance that could not be separated at all; but among the numerous suitable agents for making alcohol undrinkable some are more easily separated than others.

There are, in general, three methods by which substances, added to alcohol, can be practically removed again. Some of the substances under consideration are soluble only in alcohol of high proof and not in weak alcoholic mixtures. These substances, as, for example, petroleum, can be entirely or almost entirely separated by merely diluting the alcohol to the strength of ordinary whisky (25 to 35 per cent). Such bodies are therefore unfit for treating alcohol that is intended for sale without official supervision. Other agents, such as certain constituents of wood spirit, can be separated again by diluting the alcohol with water until the mixture contains about 40 to 50 per cent of alcohol, and then filtering over freshly ignited charcoal. As such filtration is easily performed and requires no special apparatus, it could be done, in general, without the knowledge of the revenue authorities, especially as many retail liquor dealers are in the habit of preparing liquors for drinking by the aid of a very primitive filtering apparatus consisting of a whisky keg filled with charcoal.

For this reason, substances of this second kind can not be used—at least not alone—for the treatment of alcohol.

Finally, a third class of bodies can be separated from alcohol only by distillation, either alone or with the addition of substances combining with them. In selecting from this class the preference should be given, on the one hand, to those whose boiling point is very nearly the same as that of alcohol, so as to render a separation by fractional distillation as difficult as possible; and, on the other hand, care should be taken to select such substances as require the addition of reagents, such as strong mineral acids, which powerfully corrode iron and copper stills. Bodies uniting the properties just named afford the greatest security against fraud, because the use of extensive stills for restoring alcohol can not be kept secret for any length of time on account of the knowledge of the workmen, especially if the action of the reagents on the apparatus is easily recognized. Small distilling apparatus of glass, porcelain, clay, or precious metals are out of the question by reason of their expensiveness.

The use of agents that can be removed only by distillation would afford still further security against fraud if all large and small stills were subjected to continuous supervision by expert officials, as is the case in other countries.

We have still to consider the fourth condition laid down for the selection of a suitable agent for depotabilizing alcohol; namely, that its presence can be easily demonstrated. The agent required must be so constituted, that when it is suspected that an attempt has been made to restore the alcohol, such alcohol can be recognized beyond a doubt as obtained from the depotabilized article.

It was in consideration of all these requirements that the above-mentioned mixture of wood spirit and pyridine was proposed. Pyridine, it is true, can be separated again from the alcohol by distillation after the addition of sulphuric acid, and an essential portion of the depotabilizing principle of wood spirit can be removed by filtering with charcoal; but the restoration of alcohol treated with such a mixture requires two operations—filtration after diluting with water and distillation after adding sulphuric acid—and after such double treatment the restored alcohol retains certain constituents of wood spirit, as acetone and allyl alcohol, which can be shown to be present beyond a doubt and therefore characterize the alcohol as restored. The fact that the presence of wood spirit is so easily demonstrated induced us to retain in the new agent this substance, which had been previously used for depotabilizing alcohol.

Although numerous objections have been raised to the use of pyridine, we still consider it a suitable selection. We will discuss these objections in our second paper, confining ourselves here to a statement of the principal reason for selecting this substance, and why pyridine is highly useful for the treatment of free spirits for household use, and for small manufacturing industries. No doubt was entertained at the same time that several *special* depotabilizing agents had to be admitted in the case of large chemical manufactories. On the other hand, the selection of pyridine held out the prospect of diminishing the number of the special agents to be granted to individual branches of great industries—a diminution greatly to be desired, because it would remove much conflict of interests which threatened to prevent altogether the introduction of free alcohol for industrial purposes.

By reason of the great temptation to fraud, naturally caused by the high tax on spirits, the admission of a large number of depotabilizing agents would be safe only if the revenue officials possessed sufficient chemical knowledge to distinguish them. Such knowledge can not be expected of the regular officials, while an examination of samples by official chemists would not pay unless these special substances were

used in large quantities. The interests of the Treasury therefore undoubtedly forbid the adoption of a great number of special depotabilizing agents; and in fact we are afraid that the number already admitted is not entirely without danger in this respect.

Now, pyridine is a body which is adapted above all to satisfy the necessities of numerous industries as well as the requirements of the revenue authorities. For, while even small quantities of pyridine bases make the alcohol with which they are mixed undrinkable by their disgusting smell and taste, the utility of the article is hardly impaired for by far the greater part of industrial requirements, because the pyridine bases are in many respects nearly related to alcohol. They can be mixed in all proportions with alcohol as well as with water, are combustible like alcohol, and dissolve a whole series of bodies which are also soluble in alcohol. The basic properties of pyridine are not very decided, and the pyridine bases by no means form compounds with acids and metallic salts, which easily combine with strong bases.

Thus it happens, as numerous experiments have shown, that alcohol mixed with pyridine is useful in many industries that reject methylated alcohol. Moreover, the property of pyridine, that it can be removed again from alcohol by distillation after adding nonvolatile mineral acids, has the advantage of rendering alcohol mixed with it useful for many operations of great manufacturing industries.

REPORT ON THE WORD DEPOTABILIZE.

Last December, when the writer translated for the Finance Committee of the United States Senate an abstract of the German law providing for the admixture of certain substances with spirits in order to render the same undrinkable, he made inquiry as to the terms used in England to designate this operation and learned that they used only wood spirit or methyl alcohol for this purpose and very properly called it *methylation*. This term he rejected as inappropriate, as it did not cover the other bodies mentioned in the German law. After further search in books of reference, etc., he concluded to coin a word in order to express the idea "*to render undrinkable*." For this purpose, after due consideration, the word *depotabilize* was chosen.

On receiving the translation of the article entitled Die Denaturirung des Spiritus durch Zusatz von Holzgeist und Pyridin, von Prof. Dr. A. W. Hofmann *et al*, Mr. William Pickhardt, not satisfied with the new word, desired me to make further search in British publications with a view to conforming to their phraseology as far as possible.

An examination of the British "Public General Statutes" brought to light the following facts:

On August 26, 1880, was passed in Parliament "An act to consolidate and amend the law relating to the manufacture and sale of spirits." In this is found the following among other preliminary definitions fixed by authority:

Methylate means to mix spirits with some substance in such a manner as to render the mixture unfit for use as a beverage, and "methylated spirits" means spirits so mixed to the satisfaction of the commissioners. (Law Reports, etc., London, 1880, George Edward Eyre and William Spottiswoode, p. 145.)

Further on in the same act (p. 175) is the following clause:

The substance mixed with spirits for the purpose of methylation must be wood naphtha, or methylic alcohol in the proportion of not less than one-ninth of the bulk of the spirits, or some other substance approved for the purpose by the commissioners.

The act does not specifically name any other substance, and only carries out the suggestions made as far back as 1856 in the Quarterly Journal of the Chemical Society of London, by Professors Graham, Hofman, and Redwood, to the chairman of the internal revenue.

Subsequent statutes contain no amendment mentioning the use of other bodies besides methyl alcohol; neither was I able to find any mention in the journals of learned societies or in the London Times.

I therefore strongly recommend the retention of the word *dēpŏtăbĭlize*, which has been approved by all scholars that I have consulted.

It is based upon the following definitions and analogies from Webster's Dictionary:

Potable.—(French and Spanish, *potable;* Italian, *potabile;* Latin, *potabilis*, from *potare* to drink). Fit to be drunk; drinkable.

Compare the words decarbonize, dechristianize, defeudalize, demagnetize, dematerialize, denationalize, deoxidize, etc.

The word proposed scientifically expresses what is to be done with the spirits, while the German *Denaturirung* strictly means only "to change the nature of," and is not very happily chosen.

Respectfully submitted.

CHARLES F. KROEH,
Professor Modern Languages,
Stevens Institute of Technology, Hoboken, N. J.

[Fiftieth Congress, second session. H. R. 9051.]

IN THE HOUSE OF REPRESENTATIVES.

January 26, 1889.—Referred to the Committee on Ways and Means with the amendment of the Senate and ordered to be printed.

NOTE.—The whole of these provisions concerning "alcohol in the arts" was an amendment by the Senate.

AN ACT to reduce taxation and simplify the laws in relation to the collection of revenues.

Be it enacted by the Senate and House of Representatives of the United States of America in Congress assembled.

* * * * * * *

ALCOHOL IN THE INDUSTRIAL ARTS.

SEC. 3. That the Commissioner of Internal Revenue be, and hereby is, authorized, with the approval of the Secretary of the Treasury, upon the filing of such bond as he may prescribe, to establish warehouses, to be designated as bonded alcohol warehouses, to be used exclusively for the storing of distilled spirits, of an alcoholic strength of not less than one hundred and eighty per centum of proof spirit as defined by section thirty-two hundred and forty-nine of the Revised Statutes of the United States, and in the distillers' original casks or packages, each of which warehouses shall be in the charge of a storekeeper or storekeeper and gauger, to be appointed, assigned, transferred, and paid in the same manner that storekeepers and storekeepers and gaugers for distillery warehouses are now appointed, assigned, transferred, and paid. Every such warehouse shall be under the control of the collector of internal revenue of the district in which such warehouse is located, shall be in the joint custody of the storekeeper, or storekeeper and gauger, and the proprietor thereof, and kept securely locked, and shall at no time be unlocked or opened, or remain open, except in the presence of such storekeeper, or storekeeper and gauger, or other person who may be designated to act for him, as provided in the case of distillery warehouses. And such warehouses shall be under such further regulations as the Commissioner of Internal Revenue, with the approval of the Secretary of the Treasury, may prescribe.

SEC. 4. That distilled spirits of an alcoholic strength of not less than one hundred and eighty per centum of proof spirit as defined by section thirty-two hundred and forty-nine of the Revised Statutes of the United States may, after having been properly gauged, marked, stamped, and branded in distillery warehouses, under regulations to be prescribed by the Commissioner of Internal Revenue, and approved by the Secretary of the Treasury, and also stamped as hereinafter provided, be removed in bond from distillery bonded warehouses to a bonded alcohol warehouse, under such regulations and after making such entries, and executing and filing with the collector of the district in which such spirits were manufactured, such bonds and bills of lading, and giving such other additional security as may be prescribed by the Commissioner of Internal Revenue and approved by the Secretary of the Treasury.

SEC. 5. That such distilled spirits, after being deposited in such bonded alcohol warehouse, may, under such regulations as the Commissioner of Internal Revenue, with the approval of the Secretary of the Treasury, shall prescribe, be removed to secure storerooms, and used in manufacturing establishments, as hereinafter provided, without payment of the internal-revenue tax, in the industrial arts, and in the manufacture of articles, preparations, compounds, acetic and other acids, and medicinal drugs, or chemicals made according to the directions of the United States or other national pharmacopœia or according to formulas, as published in any of the dispensatories in common use among physicians or apothecaries in the United States. But nothing herein contained shall be held or construed as authorizing the use of any distilled spirits upon which the internal-revenue tax has not been paid in the manufacture of tinctures, proprietary articles, wines, liquors, cordials, bitters, or other alcoholic compounds which are used or sold as beverages, or which, in the opinion of the Commissioner of Internal Revenue, may be so used or sold. All articles excluded from the provisions of this act, manufactored or stored on any premises to which distilled spirits have been removed free of tax under the provisions of this act, and all articles manufactured or stored in violation of this act, shall be forfeited to the United States. Every person desiring to have a bonded alcohol warehouse or storeroom established, intending to commence or continue business therein, shall file with the collector of internal revenue of the district in which the

building or room to be used as such warehouse or storeroom is located a notice in duplicate of his desire and intention, stating the location of the building or room, and such other information as the Commissioner of Internal Revenue, with the approval of the Secretary of the Treasury, may require; and at the time of the filing of such notice shall execute a bond in duplicate in the form prescribed by the Commissioner of Internal Revenue, conditioned that he will comply with all the provisions of law and regulations made in pursuance thereof pertaining to the business to be carried on by him, and that he will not use, or allow to be used, any distilled spirits entered into or removed from his warehouse or storeroom, by any person or persons whatsoever for any of the uses not authorized by this act, and that in case any such spirits shall be so used he shall pay, or cause to be paid, to the United States a sum double the amount of the tax on all such spirits so used, and shall pay all penalties incurred or fines imposed on him for violation of any of the provisions of this act. Said bonds shall each be with at least two sureties, approved by the collector of the district, and for the penal sum of not less than double the amount of the tax on the estimated quantity of such spirits that are intended to be entered in such warehouse or storeroom, as the case may be, during a period of sixty days, but in no case shall the penal sum of said warehouse bond be less than one hundred thousand dollars, nor that of the storeroom bond be less than five thousand dollars, and the said bonds shall be strengthened and renewed at such times, and shall contain such other conditions as the Commissioner of Internal Revenue may require. The collector may refuse to approve said bond when, in his judgment, the situation of the warehouse or storeroom is such as will enable the warehouse proprietor or the manufacturer to defraud the United States; and in case of such refusal the proprietor or manufacturer may appeal to the Commissioner of Internal Revenue, whose decision in the matter shall be final. One copy of the notice and application and bond will be forwarded to the Commissioner of Internal Revenue and one of each will be retained by the collector.

SEC. 6. That all distilled spirits intended to be entered for deposit in a bonded alcohol warehouse, before being removed from the distillery warehouse, shall have affixed to each cask or package an engraved stamp indicative of such intention, to be provided and furnished to the several collectors as in the case of other stamps, and to be charged to them and accounted for in the same manner, and for the expense attending the providing and affixing such stamps ten cents for each stamp shall be paid to the collector of the district on making the entry for such removal.

SEC. 7. That any manufacturer, after having provided, at his own expense, on the premises, and connected with his manufactory, a secure store-room, in which all spirits used in the manufactory shall be exclusively entered and stored, and to be separated by a secure wall from all other parts of such manufactory, and with one door only entering therein, and all other openings secured and fastened, and approved by the collector of the district and the Commissioner of Internal Revenue, after the filing of the notice and bond as required by this act, may, under such bonds and securities as the Commissioner of Internal Revenue, with the approval of the Secretary of the Treasury, may prescribe, remove distilled spirits of an alcoholic strength of not less than one hundred and eighty per centum of proof spirit as defined by section thirty-two hundred and forty-nine of the Revised Statutes of the United States, in distillers' original casks or packages, without payment of the internal-revenue tax, from a bonded alcohol warehouse, as defined in this act, to his store-room for use in his manufactory as hereinbefore provided. But such spirits shall remain in the original packages until withdrawn for immediate use. Every such store-room shall be under the control of the collector of internal revenue of the district in which such manufactory is located, and shall be in charge of a store-keeper, or store-keeper and gauger, and in the joint custody of the store-keeper, or store-keeper and gauger, and the proprietor thereof, and kept securely locked, and shall at no time be unlocked or opened, or remain open, except in the presence of such store-keeper, or store-keeper and gauger, or other person who may be designated to act for him, as provided in the case of distillery warehouses, and such store-keeper, or store-keeper and guager, shall be appointed, assigned, transferred, and paid in the same manner that store-keepers, or store-keepers and gaugers, for distillery warehouses are now appointed, assigned, transferred, and paid. And in case the official bond of the store-keeper, or store-keeper and guager, has been approved before the passage of this act, such officer shall file a new official bond, which must be approved by the Commissioner of Internal Revenue before he is assigned to duty under the provisions of this act.

SEC. 8. The store-keeper, or store-keeper and gauger assigned to such store-room shall, in addition to keeping such books and making such reports, concerning spirits entered in, and delivered and removed from, such store-room, as may be prescribed by the Commissioner of Internal Revenue, with the approval of the Secretary of the Treasury, have access to every part of such manufactory in which such distilled spirits are used, and make a report each month to the Commissioner of Internal Revenue,

stating the kind and quantity of distilled spirits used during the month, the purpose for which used, and furnish such other information as the Commissioner of Internal Revenue, with the approval of the Secretary of the Treasury, may require and prescribe; and such store-rooms shall be under such further regulations as the Commissioner of Internal Revenue, with the approval of the Secretary of the Treasury, may prescribe.

SEC. 9. That under such regulations as the Commissioner of Internal Revenue, with the approval of the Secretary of the Treasury, may prescribe any proprietor of a bonded alcohol warehouse, who has filed with the collector a bond with at least two sureties, and in the form and sum specified in this act, may admix with the distilled spirits entered in his warehouse, in the presence of the store-keeper, methylic alcohol, wood alcohol, wood naphtha, or other substances approved by the Commissioner of Internal Revenue and the Secretary of the Treasury, which shall cause such distilled spirits to be unfit for use as a beverage, and such distilled spirits, after being so methylated or admixed and drawn off in the presence of the store-keeper or store-keeper and gauger, and under the supervision of a gauger to be designated by the collector, into packages of a form and material to be prescribed by the Commissioner of Internal Revenue, and different from those of casks in which distilled spirits are usually contained, such packages to be gauged, marked, stamped, and branded by the gauger as the Commissioner of Internal Revenue, with the approval of the Secretary of the Treasury, may prescribe, may be sold and removed from such warehouse without the payment of the internal revenue tax. But distilled spirits produced in different months shall not be drawn into the same package, and each package shall not be of less capacity than five wine gallons, nor of greater capacity than twenty-five wine gallons, nor contain more than thirty-nine proof gallons of spirits. Methylated or admixed spirits may be used in the arts and manufactures, and for burning, and in the manufacture of articles and compounds, except wines, liquors, cordials, bitters, and other alcoholic compounds used and sold as beverages, or in the opinion of the Commissioner of Internal Revenue calculated or intended to be so used or sold. And the methylation or admixture of such spirits shall be by the addition of methylic alcohol, wood alcohol, wood naphtha or other substances approved by the Commissioner of Internal Revenue and the Secretary of the Treasury in such quantities, and in such manner, in the presence of the store-keeper, or store-keeper and gauger, as the Commissioner of Internal Revenue, with the approval of the Secretary of the Treasury, may prescribe. And no such methylated or admixed spirits shall be permitted on any premises in which the business of a distiller, rectifier, wholesale liquor dealer, or retail liquor dealer is carried on, or in premises connected therewith by any private or internal communication. Every person intending to withdraw methylated or admixed spirits from any bonded alcohol warehouse shall file with the collector of the district in which the spirits are to be used an application, under oath, setting forth the purpose for which the spirits are to be withdrawn, the estimated quantity to be so withdrawn and used during a period of one year; the place where the spirits are to be stored, and a full description of the premises on which the spirits are to be so used; also the name and residence of every person interested, or to be interested, in the business to be carried on at said premises; and the application shall be in such form, and shall contain such further information as the Commissioner of Internal Revenue may by regulation require.

Upon the receipt of such application, and after making such inquiries as will satisfy him that the statements therein contained are true, the collector shall, upon the applicant filing with him a bond with satisfactory sureties and in a penal sum of not less than double the amount of the tax on the spirits intended to be withdrawn during the period of one year, issue a permit, under seal, for the withdrawal of said spirits for the purpose or purposes to be therein specified; said bond and permit shall be in such form as the Commissioner of Internal Revenue may prescribe, and may be renewed, and shall be canceled or revoked at his discretion.

And the Commissioner of Internal Revenue is authorized to have such permits printed from engraved plates and with serial numbers, as in the case of special tax-stamps.

No methylated or admixed spirits shall be withdrawn from any bonded-alcohol warehouse except upon a permit issued as aforesaid, which permit shall, at the time each withdrawal of spirits is made thereunder, be presented by the person to whom it is issued, or by his duly authorized agent, to the storekeeper in charge of the warehouse, who shall indorse upon the permit the quantity of spirits withdrawn, giving the number of packages, the serial numbers of packages and stamps, the number of proof gallons, the date when tax is due by three years' limit, and the date of withdrawal in each case. But in no case shall the quantity of spirits withdrawn under any permit during the period for which the permit is issued exceed the quantity of spirits specified therein. And the sale, removal, and use of such methylated or admixed spirits shall be under such regulations and restrictions

as the Commissioner of Internal Revenue, with the approval of the Secretary of the Treasury, may prescribe. And said Commissioner may, in his discretion, exact bonds and returns of persons who purchase or receive, use, or transport methylated or admixed spirits. And any internal-revenue officer shall, at all times, have right of access to all premises on which such methylated or admixed spirits are received, stored, or used. And the provisions of sections thirty-two hundred and seventy-six and thirty-two hundred and seventy-seven of the Revised Statutes of the United States, so far as applicable, are hereby made to apply to such premises and to the proprietors or occupants thereof. And any person who shall demethylate, or separate methylic alcohol, wood alcohol, or wood naphtha or other substance from any such distilled spirits, or use, or by willful neglect cause to be used, any such methylated or admixed spirits for any of the uses not authorized by this act, or who shall separate or recover, or cause the separation or recovery of any alcohol permitted to be used in the manufacture of any of the articles by the provisions of this act free of tax, shall, on conviction, pay a penalty of not less than five hundred dollars nor more than five thousand dollars, and be imprisoned not less than six months nor more than three years.

SEC. 10. That every proprietor of any such bonded-alcohol warehouse who shall have filed the application and bond, and every manufacturer who shall have provided a suitable storeroom, which have been approved by the collector of the district and the Commissioner of Internal Revenue, shall provide a book to be prepared and kept in such form as the Commissioner of Internal Revenue may prescribe, and shall make daily entries therein of all spirits received, with the name of the person from whom the spirits were purchased, and the name of the distiller by whom and the district in which the spirits were produced, the serial number of each cask or package, and the actual contents of each when received by him. He shall also, in like manner, enter in said book the quantity of spirits removed each day, and the name, occupation, and address of the person to whom the spirits are sold; and if a manufacturer, he shall enter in said book the quantity removed from the storeroom, and if less than a cask or package, the actual quantity removed from any cask or package; and he shall also enter the name of all articles, in the manufacture of which such spirits have been used, as authorized in this act. And every person keeping the book herein required shall, on or before the tenth day of each month, make a full and accurate transcript of all entries made during the preceding month, and shall, after verifying the same by oath, forward the same, through the collector of the district, to the Commissioner of Internal Revenue. The book herein required shall be kept on the premises described in the application, and shall, at all times be open for the inspection of any revenue officer; and such officer shall, at all times, have access to said premises for the purpose of inspecting the same, or any stock, utensil, apparatus, or appliances therein, where such spirits are used, and the owner or occupant of said premises shall, on demand of such officer, furnish needful assistance to enable the said officer to make such examination and report. And any person who shall willfully use, or by neglect cause to be used, any distilled spirits, entered in his bonded-alcohol warehouse or storeroom established under this act, in any manner except as expressly provided and permitted in this act, shall, on conviction, pay a penalty of not less than one thousand dollars nor more than five thousand dollars, and be imprisoned not less than six months nor more than three years.

SEC. 11. That any person who, under the provisions of this act, or under any regulation issued in pursuance hereof, shall neglect or refuse to make or render any entry, bond, or account, or shall make or render any false or fraudulent entry, bond, or account, or shall, in qualifying as a surety to any bond required by this act, make any false or fraudulent statement or representation as to the property owned by him, and any person who shall fail to use any stamp, label, tag, mark, caution-notice, or any other device prescribed by this act, or by any regulation issued in pursuance of this act, or shall fraudulently use or re-use the same, shall for any such offense, on conviction had, be fined not less than five hundred dollars, nor more than five thousand dollars, and be imprisoned not less than six months, nor more than three years; and any vessel, package, or other inclosure not stamped, marked, or branded as required by law and this act, all spirits or other materials contained in such vessel, cask, or package, or inclosure, shall be forfeited to the United States. Nothing in this act shall be construed as extending the time within which the tax on distilled spirits shall be paid beyond the limit fixed by ——— law within which such spirits must be withdrawn from distillery warehouses upon payment of the tax. And, in case any spirits withdrawn from a distillery warehouse under the provisions of this act are not used as authorized by this act within the time fixed by the distiller's warehousing bond for the payment of the tax, the Commissioner of Internal Revenue shall assess the tax against the person liable, under bond as warehouse proprietor or manufacturer at the time, for the proper use and custody of the spirits, and such tax shall be collected as in the case of other assessed taxes.

It shall not be lawful for any person to receive, use, or store any methylated distilled

spirits free of internal-revenue tax under the provisions of this act or any premises within six hundred feet in a direct line from any premises used as a distillery or for rectifying distilled spirits.

Any person who shall receive, or use distilled spirits, free of tax, under the provisions of this act, and shall knowingly or willfully omit, neglect, or refuse to do, or cause to be done, any of the things required to be done by this act, or any regulation made pursuant thereto, or shall do anything by this act prohibited, or declared thereby to be unlawful, if there be no specific penalty or punishment imposed by this act for the neglecting, omitting, or refusing to do the thing required, or for the doing, or causing to be done, the thing prohibited, or declared unlawful, he shall, on conviction, pay a penalty at the discretion of the court, not exceeding five thousand dollars. And the Commissioner of Internal Revenue is authorized to determine the quality and strength of the methylic alcohol, wood alcohol, wood naphtha, or other substance that may be used in methylating or admixing spirits. And the Commissioner of Internal Revenue may also, at his discretion, require the maker of methylated or admixed spirits to provide a separate storeroom and vats, with suitable locks and fastenings, for keeping and storing methylic alcohol, wood alcohol, wood naphtha, or other substance used in methylating or admixing, and may require samples to be furnished from such vats or other receptacles for chemical analysis and for his approval.

* * * * * * *

53D CONGRESS, 3d Session. } SENATE. { REPORT 760, Part 2.

ALCOHOL IN THE ARTS.

Germany, Switzerland, the Netherlands, Belgium, France, Italy, Russia, Sweden, Norway, Portugal, Austria-Hungary.

LAWS AND REGULATIONS FOR THE USE OF METHYLATED AND UNMETHYLATED ALCOHOL IN THE ARTS.

JANUARY 12, 1895.—Reported by Mr. VOORHEES from the Finance Committee and ordered to be printed.

WASHINGTON:
GOVERNMENT PRINTING OFFICE.
1896.

CONTENTS.

Laws and regulations of—	Page.
German Empire	5–214
Switzerland	215–242
The Netherlands	243–260
Belgium	261–294
France	295–414
Italy	415–472
Russia	473–476
Sweden	477–496
Norway	497–508
Portugal	509–542
Austria-Hungary	543–640
Belgium (second law)	641–708

ALCOHOL IN THE ARTS.

GERMAN EMPIRE.

CUSTOMS AND REVENUE LAWS AND LAWS AND REGULATIONS GOVERNING THE USE OF SPIRITS, EXEMPT FROM DUTY, FOR CURATIVE, SCIENTIFIC, AND INDUSTRIAL PURPOSES, TOGETHER WITH BLANK FORMS PRESCRIBED BY THE REGULATIONS.

EMBASSY OF THE UNITED STATES,
Berlin, November 16, 1894.

SIR: Referring to your instruction, No. 161, of the 12th ultimo, received October 25, I have the honor to transmit herewith a copy, with translation, of a note to-day received from the Imperial Foreign Office in reply to my note on the subject, together with ten printed inclosures therein particularly mentioned containing complete copies of the laws and regulations of the Government of Germany regulating the use of methylated and unmethylated alcohol in the arts, which are desired by the chairman of the Committee on Finance of the United States Senate.

I have, etc.,

THEODORE RUNYON.

Hon. WALTER Q. GRESHAM,
Secretary of State.

FOREIGN OFFICE, BERLIN, *November 15, 1894.*

Replying to the esteemed note of the 25th ultimo, the undersigned has the honor to inform his excellency the embassador extraordinary and plenipotentiary of the United States of America, Mr. Theodore Runyon, that the use of spirits, exempt from duty, for curative, scientific, and industrial purposes has been regulated for the German Empire in a uniform manner.

The laws regulating the matter are the law of July 19, 1879 (Imperial Law Sheet, p. 259), and paragraph 1, subdivision 4, and paragraph 41, Figure V, of the law of June

24, 1887 (Imperial Law Sheet, p. 253). In pursuance of the legal provisions referred to the following regulations and rules have been issued:

1. The regulations respecting the exemption from duty of spirits for industrial and other purposes (Central Sheet for the German Empire for 1887, p. 419) and respecting the reservation in paragraph 3, subdivision 2, of these regulations.

2. The rules for the use of unmethylated spirits exempt from duty for curative, scientific, and industrial purposes (Central Sheet for 1892, p. 695).

The regulations above mentioned have in some respects been amended and supplemented by decrees of the Federal Council dated December 15, 1887 (Central Sheet, p. 570); June 21, 1888 (Central Sheet, p. 227); May 29, 1889 (Central Sheet, p. 320); December 5, 1889 (Central Sheet, p. 589); March 8, 1890 (Central Sheet, p. 77), and October 27, 1892 (Central Sheet, p. 667).

While inclosing herewith copies of the laws and Central Sheets above designated the undersigned at the same time avails himself of this occasion, etc.

ROTENHAM.

IMPERIAL LAW SHEET.

No. 28.

(No. 1322.) *Law relating to the exemption from tax of spirits for industrial purposes, July 19, 1879.*

We, William, by the grace of God, German Emperor, King of Prussia, etc., decree, in the name of the Empire, with the consent of the Federal Council and the Reichstag, as follows:

Authority of Federal Council to impose tax.

SECTION 1. The Federal Council is hereby authorized to refund the tax on spirits used for industrial purposes within the area of the spirit tax district, including the preparation of vinegar under the control and conditions to be prescribed by the Federal Council on the basis of the rate refunded on spirits intended for export.

Penalty for unlawful claim.

SEC. 2. Whoever shall attempt to obtain a drawback of the spirit tax which he could not claim at all, or only to a smaller amount, shall be liable to a fine equal to four times the amount of drawback unduly claimed.

Penalty for unlawful use of spirits on which drawback is claimed.

Whoever shall use for another purpose than the one allowed spirits on which a drawback has been promised or granted, in accordance with the regulation issued by the Federal Council (sec. 1), shall be subject to the same penalty.

Penalty for contravention of regulations.

SEC. 3. Whoever shall contravene the regulations for the execution of section 1 shall be liable to a fine of not more than 150 marks.

Punishment of repeated offenses, etc.

SEC. 4. The punishment of repeated offenses, the subsidiary representative responsibility for fines incurred, and of penalties as well as the ascertainment, investigation, and

decision concerning any violation of the provisions of this law or of the administrative regulations issued thereunder, and the mitigation of penalties and the remission by way of pardon, shall be governed by the rules which apply to any violation of the legal provision regarding the taxing of spirits.

SEC. 5. The provision No. 2, section 4, Letter D, of the article 5 of the tariff treaty of July 8, 1867, is hereby repealed.

Documentary, under our own signature and affixed imperial seal.

Given at Castle Mainau, July 19, 1879.

[SEAL.] WILLIAM.

PRINCE VON BISMARCK.

No. 21.

(No. 1727.) *Law of June 24, 1887, relating to the taxing of spirits.*

We, William, by the grace of God, German Emperor, King of Prussia, etc., decree, in the name of the Empire, with the consent of the Federal Council and the Reichstag, as follows:

FIRST SECTION.

CONSUMPTION TAX.

1. OBJECT AND AMOUNT OF CONSUMPTION TAX.

SECTION 1. The spirits produced within the area of the spirit tax district shall be subject to a consumption tax on and after October 1, 1887, and to revenue control for that purpose. Consumption tax. Date of operations.

The consumption tax in the case of a total annual amount equal to 4.5 liters of pure alcohol per capita of the area of the spirit tax district ascertained at the last preceding census shall be 0.50 marks per liter of pure alcohol, and for the amount produced beyond that limit 0.70 marks per liter of pure alcohol. Amount.

The total annual amount on which the lower rate of tax shall be paid as well as the amount of the lower rate of tax, shall be subject to revision every three years. Revison every three years.

The following items shall be free from consumption tax and shall not be computed in ascertaining the annual amount which is to serve as the basis under the preceding paragraph:

(1) Spirits intended for exports.

(2) Spirits used for industrial purposes, including the manufacture of vinegar for medicinal or scientific purposes, or for cleansing, heating, or illuminating purposes, under special regulation by the Federal Council. The owners of distilleries shall have the right, provided they bear the expense, to demand official methylation of their spirits in their respective distilleries. Exemption. Right of owners to demand official methylation of spirits at their distilleries.

SEC. 2. For the various distilleries in existence on April 1, 1887, the annual amount of spirits which they are allowed

Ascertainment of tax.

to produce at the rate of taxation of 0.50 marks per liter of pure alcohol shall be measured according to the average of the amount of tax paid by them in the fiscal years 1879–80 up to 1885–86, inclusive, omitting the lowest and the highest annual amount, in which, however, the amount of the tax of the yeast distilleries shall be allowed only at one-half and those of the other grain distilleries only at seven eighths. In estimating for mixed distilleries (pressed yeast and thick mash) the proportionate amount for the taxes paid for the two kinds of operations shall be taken into account.

Mixed distilleries.

For distilleries which were in existence on April 1, 1887, but did not regularly operate during the fiscal years 1879–80 up to 1885–86, or which on April 1, 1887, were merely in course of erection, or which in the year 1886 to 1887 undertook considerable enlargement in their plants, the annual amount of spirits which they may produce at the tax rate of 0.50 marks shall be measured in proportion to the extent of their plans.

Distilleries in course of erection or enlargement.

Amount of production to be fixed every three years.

At the expiration of every three years the annual amount of spirits which may be produced at the lower rate of tax shall be fixed anew for the various distilleries thus far in active operation, and for the newly established agricultural distilleries (sec. 41, I*a*) or distilleries paying a tax on the material. This estimate shall be based on the annual average amount produced at the lower rate of tax during the preceding three years. The distilleries newly established in the interim, as well as those which did not regularly operate during the preceding three years, shall be taxed according to the extent of their plants, regard being had to the agricultural conditions, upon the examination of two experts of the distillers' association. In estimating the amount of spirits to be produced by such distilleries at the lower rate of tax, the proportionate amount according to which the distilleries previously existing participate in the annual amount to be produced at the lower rate of tax in proportion to the mash-vat tax shall be taken as a basis.

Agricultural distilleries transformed into industrial distilleries.

Agricultural distilleries which after April 1, 1887, shall be transformed into industrial distilleries (sec. 42, I, par. 1) shall not be permitted to produce spirits at the lower rate of tax.

Grain distilleries passing over to the manufacture of yeast.

For those grain distilleries which after October 1, 1887, shall pass over to the manufacture of yeast, the estimate of the amount of spirits subject to the lower rate of tax shall be made according to the principles governing the existing yeast distilleries.

Distilleries paying a material tax.

Distilleries which pay a material tax may be allowed, under special regulation of the Federal Council, to manufacture their entire product at the lower rate of tax.

2. When Taxes Fall Due and Who Shall Pay Them.

Consumption tax, when to be paid.

SEC. 3. The consumption tax shall be paid as soon as the spirits pass from revenue control into free commerce.

Upon whom incumbent.

The payment of the tax shall be incumbent upon him who receives the spirits for free disposal.

The payment of the tax may be suspended upon giving bond. For a period not exceeding three months, however, the payment of the tax may also be suspended without security being given, unless there should be reasons which seem to render the collection of the tax uncertain.

Extension of payment.

3. COMPULSORY RECTIFICATION.

SEC. 4. On and after October 1, 1889, spirits not produced from rye, wheat, or barley, nor subject to a material tax, provided it be subject to the consumption tax, shall be brought into free commerce only in a purified state.

Spirits not produced from rye, wheat, or barley to be employed only in a purified state.

The degree and mode of rectification, as well as the aids required to complete it, shall be determined by the Federal Council.

Aids to complete rectification.

These provisions shall at once be submitted to the Reichstag, if assembled; otherwise at its next meeting. They shall become inoperative so far as the Reichstag shall demand.

Provisions subject to revision by the Reichstag.

4. PROTECTIVE ORDINANCES.

(a) *To provide against secret diversion or withdrawal of alcoholic vapors, low wines, or spirits.*

SEC. 5. Receivers, firmly connected with the distilling apparatus, are to be set up in distilleries, in conformity with more detailed regulations of the revenue authorities, into which the entire amount of spirits produced shall be conducted, and such other appliances are to be used which the revenue authorities deem necessary for protection against secret diversion or withdrawal of alcoholic vapors, low wines, or spirits.

Receivers and apparatus.

Diversion or withdrawal of spirits.

The distilling apparatus, the receivers, and the tubing connecting them, as a rule, are to be placed under official seal in such a way that a secret diversion or withdrawal of alcoholic vapors, low wines, or spirits can only be possible by force which would leave external traces. The rooms in which the receivers are to be set up must correspond to the requirements of the revenue authorities, and, if necessary, are to be placed under joint locks by that authority.

Distilling apparatus, receivers, and tubing to be under seal.

SEC. 6. In cases in which the establishment of appropriate rooms for setting up the receivers is not possible, or which would involve disproportionate cost, the revenue authorities may allow in place of the receivers the employment of a reliable measuring apparatus, firmly connected with the distilling apparatus and placed under secure official fastening, which measuring apparatus shall continuously indicate the amount and strength of the spirits flowing from the distilling apparatus, or which shall render possible the subsequent official ascertainment of the strength by retaining samples.

When receivers can not be set up.

SEC. 7. The revenue authorities shall reserve the right, in special cases, to order the setting up of a measuring apparatus while retaining the receiver. The authorities may fix in advance the minimum amount of pure alcohol to be drawn, or they may place the distillery under permanent control if a penalty has been imposed because of fraud in that distillery.

The authorities may establish both measuring apparatus and receiver.

Regulations to be complied with before distillery may commence operation.

SEC. 8. The revenue authorities may forbid the operation of the distillery until the requirements mentioned in sections 5 to 7 have been complied with.

Tax district to pay first cost of receivers, measuring apparatus, and transfer tubes.

SEC. 9. The cost for the first purchase of the receivers, measuring apparatus, transferring tubes, and patent locks shall be borne by the spirit tax district.

(b) Interruption of work or injury to fastenings and utensils.

Injury to apparatus, etc.

SEC. 10. Any interruption of the work of a distillery or any injury to an official fastening of any of the parts of the distilling apparatus, including the receivers and the measuring apparatus, from which a secret diversion or withdrawal of alcoholic vapors, low wines, or spirits may be possible, must be reported to the revenue authorities immediately upon discovery, and at latest within twenty-four hours, under the detailed regulations to be issued for such cases.

If access to alcohol is gained or leakage ensues, work and tax may be suspended.

If as a result of such injury access to the alcohol be possible or a leakage caused, or the regular working of the measuring apparatus interfered with, the revenue authorities may order suspension of work, and, if need be, may order the cessation of the tax. The same shall hold in case of any other disturbance occurring in the regular function of the measuring apparatus.

New measures to be ordered within 24 hours, and investigation released, etc.

The revenue authorities shall order the measures required for the security of the revenue interests within twenty-four hours after receiving the report, and shall order an investigation, as the case may require.

(c) Further control of spirits.

Spirits to be under Government control until released, etc.

SEC. 11. The spirits produced shall be ascertained in the distillery by the revenue authorities according to amount and strength, and shall remain under revenue control until released for exportation or for use for industrial and other purposes, or until the consumption tax shall have been paid or respited.

Where amounts ascertained under par. 1 falls short of amount officially ascertained.

Where a measuring apparatus is used, or when the minimum amount of pure alcohol to be drawn has been officially fixed (secs. 6 and 7), if the amount of pure alcohol ascertained according to paragraph 1 falls short of the amount indicated by the measuring apparatus or by official ascertainment, and if the owner of the distillery can not furnish to the revenue authorities a sufficient reason therefor, in a credible manner, then he shall pay the corresponding amount of the consumption tax for the deficiency. The loss of alcohol arising under ordinary conditions by evaporation shall be deducted from the amount that ought to be present according to the measurement.

Further storage.

Should it be necessary to further store spirits under revenue control, the owner of the spirits must cause them to be placed in a storage room intended for untaxed goods, or, with the consent of the revenue authorities, in a public warehouse exclusively established for this purpose or in a private warehouse under joint official fastening. The detailed regulations on this point shall be issued by the Fed-

eral Council. The Federal Council shall also establish the conditions and the control under which the spirits subject to revenue control may be rectified outside of the storage room or may be subjected to further manipulation for the purpose of exportation.

For spirits which in free commerce are subjected to further manipulation for use as a beverage, it shall be lawful under detailed regulations of the Federal Council to remit the consumption tax up to 5 per cent. When used as a beverage.

SEC. 12. In the exportation of manufactures in the preparation of which spirits existing in free commerce have been used, it shall be lawful, after special determination of the Federal Council, to grant a drawback of the consumption tax up to 0.50 marks for every liter of pure alcohol contained in the manufactured goods. Drawback.

(d) Provisions for small distilleries.

SEC. 13. For those distilleries which in one operating year fill with mash not more than 1,500 hectoliters of vat space, or which used merely waste of their own beer production, or worked solely on nonfarinaceous material with the exception of molasses, beef or beef juice, the government of the state dispensing with the operating appliances and control ordered in sections 5 to 8, 10, and 11, may order that, while observing the administrative regulations to be established for this purpose, the consumption tax on that amount of alcohol which during the declared time may be produced with the distilling apparatus to be used according to its capacity shall be established in advance in a binding manner by the revenue authorities after giving the owner of the distillery a hearing. The provisions of section 3, paragraphs 1 and 2, shall not apply in that case; on the contrary, the consumption tax shall be paid by the owner of the distillery, and unless a respite is granted the payment shall be made within three months after the production of the spirits.

The government of the state by way of exception may grant to the above-designated distilleries the untaxed storage of the spirits produced by them for the purpose of subsequent exportation (sec. 1, par. 4), or for the purpose of subsequent transfer into free commerce according to the provisions to be issued for this purpose.

(e) Transfer of ownership.

SEC. 14. Every change in the ownership of a distillery is to be reported in writing to the revenue authorities within a week by the new owner, and in cases of voluntary transfer of ownership also by the previous owner. Change of ownership.

(f) Domiciliary visits.

SEC. 15. In regard to domiciliary visits in case of suspicion of a violation of the ordinances of this law regarding the consumption tax, the provision of section 45 of the law of July 8, 1868 (Federal Laws, p. 384), relating to the taxing of spirits in various states and territories belonging to the North German Confederation, shall apply. Domiciliary visits.

5. Statute of Limitation for Consumption Tax.

Statute of limitation.

SEC. 16. All demands and supplementary demands of consumption tax, and also all claims for indemnity on account of excess of tax or undue tax paid, shall become barred within one year from the date when the tax became payable or was actually paid. The claim for supplementary payment of defrauded tax shall be barred after three years.

These periods of limitation shall not apply to the redress which the states may have against the revenue officials.

6. Penalties.

(a) *Meaning of the term defraudation of consumption tax.*

Definition of defraudation.

SEC. 17. Whoever shall attempt to evade the payment of the consumption tax on spirits, or shall attempt to obtain a drawback of the consumption tax which he should not claim at all, or only at a lower rate or for a lower amount, shall be guilty of a defraudation of the consumption tax.

Defraudation, when committed.

SEC. 18. A defraudation of the consumption tax shall be assumed to have been committed:

(1) If spirits are distilled other than by the prescribed operating plan approved by the revenue authorities, or on other days, or in other rooms, or by using other distilling apparatus than those reported in the approved operating plan.

(2) If in the case of small distilleries (sec. 13) declarations of operations ordered by the administration are not rendered or are incorrectly rendered, or if the prescribed distillery register is not kept or is incorrectly kept.

(3) If alcoholic vapors, low wines, or spirits are illegally diverted or withdrawn.

(4) If the spirits under revenue control are illegally disposed of.

(5) If spirits for which freedom from consumption tax or drawback thereof has been granted (sec. 1, par. 4, No. 2, and sec. 12) are used for other purposes than those allowed.

Contravention amounting to a defraudation.

SEC. 19. The following contravention shall be deemed equal to a defraudation of the consumption tax:

(1) If distilling utensils or apparatuses withdrawn from use by affixing an official seal, or in any other way, by order of the revenue authorities, are again illegally set in operation.

(2) If an official seal, affixed under the provision of this law or under the administrative regulations issued in accordance with the law, or any one of those parts of the distilling apparatus, including the receivers and the measuring apparatus from which a diversion or withdrawal of alcoholic vapors, low wines, or spirits is possible, has been illegally tampered with.

(3) If in a distillery in which a measuring apparatus has been set up such acts are committed as are apt to interfere with the regular working of the measuring apparatus, is if a measuring apparatus which indicates incorrectly or knowingly used.

(4) If one acquires or deals in spirits which he knows or must assume under the circumstances have been the subject of a defraudation of the consumption tax.

SEC. 20. The existence of the defraudation of the consumption tax in the cases indicated in sections 18 and 19 shall be established by the facts therein designated.

If, however, in those cases it should be ascertained that a defraudation of the consumption tax could not have been practiced, or if it should be ascertained that such defraudation was not intentional, then only a disciplinary penalty shall be imposed according to section 26.

(b) Penalty for defraudation of consumption tax.

Fines and penalties for defraudation.

SEC. 21. Whoever shall commit a defraudation of the consumption tax shall be liable to a fine equal to four times the amount of the tax withheld or four times the amount of drawback unduly claimed, but such fine shall amount to at least 5 marks. If the amount of tax withheld can not be ascertained, a fine of not less than 5 nor more than 10,000 marks shall be imposed. Besides the fine, the tax must be paid or the amount of drawback unduly received must be refunded.

The consumption tax and the fine in case a distilling apparatus has been illegally used for the preparation of spirits shall be estimated according to the amount of pure alcohol which might be produced with that distilling apparatus in continuous operation during the three months preceding the moment of discovery, unless a greater defraudation has been ascertained or it has been shown that the operation has a smaller extent.

If alcoholic vapors, low wines, or spirits have been illegally diverted or withdrawn, or if the measuring apparatus has been purposely interfered with, the consumption tax and the penalty shall be calculated by assuming that the diversion, withdrawal, or interference took place continuously during the three months preceding the moment of discovery, unless it can be shown that the duration was a different one or that the defraudation was greater. In cases coming under this head the perpetrator and the accomplice may, in addition to the fine, be subjected to imprisonment for not more than one year.

Connivance and participation.

SEC. 22. In case of transgression, any participation therein or connivance therewith shall be punished by a fine of not more than 150 marks.

(c) Increase of penalty for repeated offenses of defraudation of consumption tax.

Repetition.

SEC. 23. In case of repetition of defraudation of consumption tax after previous punishment, the fine threatened in section 21 shall be doubled. Every further repetition of the offense shall be punished by imprisonment of not more than three years. It shall be lawful, within the discretion of the judge, however, without interfering with the order contained in section 21, paragraph 3, and in consideration of all the circumstances of the violation and of the preced-

ing cases, to impose a sentence of imprisonment or a fine of twice the amount of that threatened for the first repetition.

SEC. 24. The increase in penalty for repetition shall be incurred no matter whether the former penalty was imposed in the same or in a different federal state.

It is incurred even if the former penalty has been only partially discharged or entirely or partially remitted; but it is excluded if since the discharge or remission of the earlier penalty up to the commission of the new penal offense three years have elapsed.

(d) Punishment of violations of the law regarding rectification.

SEC. 25. Violations of the regulations issued by the Federal Council in accordance with section 4 of the present law regarding the rectification of spirits shall be punished with a fine of not more than 1,000 marks.

Penalty when penalty for defraudation has not been incurred.

SEC. 26. Violations of the provisions of this law regarding the consumption tax, as well as of the administrative regulation issued in accordance with the law and publicly promulgated, or specially communicated to the person concerned, shall be punished with a disciplinary fine not to exceed 300 marks, unless the penalty for defraudation has been incurred.

SEC. 27. A disciplinary fine shall also be imposed according to section 26:

For giving presents or gratuities to officers in charge.

(1) On any person who shall offer, promise, or give presents or other gratuities to any officer charged with the protection of the consumption tax, or to persons connected with him, in order to secure the commission or omission of an official act relating to the tax, unless the case should call for the application of section 333 of the criminal code.

Penalty for interfering with official in discharge of duty.

(2) On any persons who shall be guilty of actions or omissions by which such an official is prevented from the legal exercise of the official duties necessary to be performed by him to protect the consumption tax, unless the facts in the case should call for the application of section 113 or 114 of the criminal code.

(f) Penalties for owners of distilleries and managers of distilleries.

Punishment of owner in certain cases.

SEC. 28. The owner of a distillery in which an illegal diversion or withdrawal of alcoholic vapors, low wines, or spirits, or an intentional disturbance of the measuring apparatus has been ascertained, shall be punished as such owner, independently of the prosecution of the real perpetrators, with a money fine of not less than 50 nor more than 500 marks.

Secret appliances, etc.

If it be ascertained that in a distillery secret appliances for the purpose of diverting or withdrawing alcoholic vapors, low wines, or spirits, or for interfering with the measuring apparatus exist, the owner of the distillery, as such, shall be subject to a money fine of not less than 500 nor more than 5,000 marks.

Injury to seals or apparatus.

If in a distillery an official seal, or one of those parts of the distilling apparatus (sec. 13, No. 2) from which a

diversion or withdrawal of alcoholic liquors, low wines, or spirits is possible, is injured, the owner of the distillery, as such, shall be subject to a money fine of not less than 25 nor more than 250 marks.

Violation must be with knowledge or consent of owner.

The penalties mentioned in paragraghs 1 to 3 shall be enforced only when it is ascertained that the violation has taken place with the consent or knowledge of the owner of the distillery.

When owners do not conduct business personally.

SEC. 29. Owners of distilleries who do not conduct the operations themselves may apply to have the penal responsibility incumbent on them under section 28 transferred to a manager of the distillery acting in their name and under their orders. If the application be granted, the penal responsibility shall be transferred to the manager of the distillery, without, however, interfering with the subsidiary representative obligation of the owner of the distillery as provided in section 32. The transfer herein granted may be repealed at any time.

The penalty provided in paragraphs 1 to 3 of section 28 shall be enforced only when it has been ascertained that the violation has taken place with the consent or knowledge of the manager of the distillery.

Sentence for defraudation of tax shall bar future operation.

SEC. 30. If owners of distilleries are sentenced because of defraudation of the consumption tax by illegal manufacture of spirits, by diversion or withdrawal of alcoholic vapors, low wines, or spirits (sec. 18, Nos. 1 to 3), or by willful disturbance of the measuring apparatus, they shall be prohibited from ever again engaging in the distilling trade or from causing others to engage in it for their advantage. The revenue authorities, however, are empowered to make exceptions in favor of the offender.

Exceptions may be made.

(*g*) *Executive measures.*

Revenue officers empowered to enforce provisions.

SEC. 31. Without interfering with the disciplinary penalties that have been incurred, the revenue authorities may enforce the observance of the control ordered under the provisions of this law relating to the consumption tax and of the administrative regulations issued thereunder by threatening and levying executive fines not to exceed 500 marks, and if the persons on whom the duty is incumbent shall omit to introduce the appliances prescribed for the purpose of control the revenue authorities may cause the appliances to be established at the cost of the person subject to the tax. The collection of the expenses thus accruing shall be in accordance with the procedure for the collection of customs, and with the same right of preference.

Failure to provide apparatus, etc.

Collection of expenses, how to be made.

(*h*) *Subsidiary representative obligation of third persons.*

Responsibility of manufacturers and traders for their subordinates.

SEC. 32. Manufacturers and traders, including the owners of distilleries, shall be held responsible in the matter of the withholding of the consumption tax for their representatives and industrial assistants, as well as those members of their household who are in a position to exercise an influence on the industrial operations, for the fines imposed on such representatives, assistants, and members of their

households for violation of the provisions of this law relating to the consumption tax and of the administrative regulations issued thereunder, as provided in section 66 of the law of July 8, 1868, provided they have omitted to prevent the violations of these provisions by their representatives.

Willful appointment or retention of representatives, etc., who have once violated law.

In case of the willful appointment or retention of a representative or industrial assistant once punished for a defraudation of the spirit tax, the further provisions of section 66 of the law of July 8, 1868, are to be enforced.

(i) Coincidence of several penal actions.

Repeated violations.

SEC. 33. In case of several or repeated violations of the provisions of this law relating to the consumption tax which are only liable to disciplinary penalties, provided the violations are of the same kind and are discovered simultaneously, the disciplinary penalties shall be imposed on the same perpetrators as well as on the several participators together only once.

(k) Commutation of the fines into imprisonment.

Fines when uncollectable commuted to imprisonment.

SEC. 34. The commutation of fines that can not be collected into loss of liberty shall take place under the provisions of sections 28 and 29 of the criminal code.

Highest sentence.

The highest sentence of imprisonment, however, in the case of a defraudation of the consumption tax in repeated offenses shall be two years, and in the case of a violation liable to disciplinary fine, as well as in the cases cited in section 31, shall be three months' imprisonment.

(l) Superannuation of penalty.

Superannuation for defraudation and disciplinary penalties.

SEC. 35. The criminal prosecution for defraudation of the consumption tax shall be superannuated in three years, and for violations liable to disciplinary penalty in one year.

The criminal prosecution under the provisions of sections 28 and 29 shall be superannuated simultaneously with the superannuation in the case of the real offender.

(m) Criminal procedure.

Mode of procedure.

SEC. 36. As regards the ascertainment, investigation, and judgment of the violations of the provisions of this law relating to the consumption tax and the administrative regulations issued thereunder, as well as to the mitigation of the penalty, and the remission of the penalties by way of pardon, the provisions shall be applied according to the procedure against violation of the tariff laws.

Fines shall accrue to state.

SEC. 37. The fines incurred under the provisions of this law shall accrue to the benefit of the treasury of that state under whose authorities the fine shall have been imposed.

SEC. 38. Every investigation instituted and every sentence passed by a competent authority under the provisions of section 36 for a violation of the provisions of this law and of the administrative regulation issued thereunder may also be extended to those participators residing in other federal states.

To further the execution of the penalties herein imposed, whenever necessary the competent authorities of that federal state in whose territory the execution of the penalty is to be effected may be called upon.

Jurisdiction to extend outside the state.

The authorities and officials of the federal states shall actively and promptly render to each other the desired assistance in all legal measures necessary for the prosecution of violations of this law.

Federal authorities may be called upon, when.

7. DISTRIBUTION OF RECEIPTS FROM THE CONSUMPTION TAX.

SEC. 39. The net proceeds of the consumption tax shall be assigned to the various federal states according to the recorded population of area of the spirit-tax district. The expenses accruing to the federal states by the levying and the administration of the duty shall be refunded according to the rules to be issued by the Federal Council.

Net proceeds, how distributed.

Refund of expenses.

SECOND SECTION.

MASH-VAT TAX, SPIRIT-MATERIAL TAX, AND ADDITION TO CONSUMPTION TAX.

1. GENERAL INTRODUCTION OF THE LAW OF JULY 8, 1868.

SEC. 40. The provisions of the law of July 8, 1868, relating to the tax on spirits in various states and territories belonging to the North German Confederation, shall become operative on October 1, 1887, for the entire spirit-tax district, with the changes and supplements noted in sections 41 to 43 of the present law, as well as with the proviso that the maximum amount of the fines to be imposed for contravention of the provisions of that law shall not exceed 10,000 marks. The regulations existing in various federal states in regard to the granting of facilities for operation may be left in force in the future by the government of the states, and may also be introduced in other states according to rules to be issued by the Federal Council.

When the provisions of the law go into effect.

2. MASH-VAT AND SPIRIT-MATERIAL TAX.

SEC. 41. (1) The levying of the mash-vat tax shall take place—

(A) In the agricultural distilleries, that is to say, in those distilleries working exclusively with grain or potatoes, on whose operations the entire residue shall be used as feed on one or more farms belonging to the owners of the distillery or worked by them, and the manure produced shall be exclusively used on the ground belonging to the owners of the distilleries or worked by them.

Levying of mash-vat tax, etc.

(B) In those distilleries which work with molasses, beets, or beet juice.

(2) The mash-vat tax shall be 1.31 marks for every hectoliter of cubical contents of the mash vat, and for every mash filling. In calculating the tax an excess of cubical contents not amounting to 25 liters shall not be taken into account.

Amount.

Limited operation.

In agricultural distilleries which are only worked during the period from the 1st of October to the 15th of June the mash-vat tax shall be fixed at the following fractions of the amount fixed in paragraph 2:

(*a*) If in a single day, on an average, not more than 1,050 liters of vat space are filled with mash, the tax shall be only six-tenths.

(*b*) If in a single day, on an average, not more than 1,500 liters of vat space are filled with mash, the tax shall be only eight-tenths.

(*c*) If in a single day, on an average, not more than 3,000 liters of vat space are filled with mash, the tax shall be only nine-tenths.

If during a calendar month in one of the above-described distilleries more than 1,050 or 1,500 or 3,000 liters of vat space, on an average, are daily filled with mash, then for the calendar month in question the corresponding higher rate of tax shall be levied.

The claim for tax privilege shall not be lost if in one of the described distilleries nonfarinaceous material alone is worked up through intermediate operation.

(3) The spirit-material tax shall be paid according to the following rates:

Rate of material taxed.

(*a*) On 1 hectoliter of pressed grape husk, 0.35 marks.

(*b*) On 1 hectoliter of kernel fruit or husks of kernel fruit and berries of all kind, 0.45 marks.

(*c*) On 1 hectoliter of brewers' offal, yeast broth, pressed grape yeast, and roots of all kind, 0.50 marks.

(*d*) On 1 hectoliter of grape wine or cider, liquid grape yeast, and stone fruit, 0.85 marks.

(4) For those agricultural distilleries which in one operating year fill with mash not more than 1,500 hectoliters of vat space, as well as for those distilleries which only employ offal of their own beer production, or which work only on nonfarinaceous material, with the exception of molasses, beet or beet juice, it shall be lawful for the government of the state to remit the operating supervision and control ordered under the existing legislation, and to order that while observing the administrative regulations to be issued regarding this matter the tax may be fixed in advance in a binding manner by the revenue authorities on that amount of material or mash which may be distilled during the declared operating period with the distilling apparatus intended to be used according to its capacity.

Drawback.

(5) A drawback of the mash-vat or spirit-material tax may be granted under a special order of the Federal Council not only for industrial purposes, but also for spirits which are employed for medicinal or scientific purposes, or for cleansing, heating, cooking, or illuminating purposes.

3. Addition to the Consumption Tax.

Sec. 42. (1) In the industrial distilleries, that is to say, in those distilleries which work with farinaceous materials but do not belong to the agricultural distilleries (sec. 41, I*a*), or which work with mixtures of farinaceous or nonfarinaceous material, the mash-vat tax shall no longer be

levied, unless they fall under section 41, I*b*. On the spirits produced in such distilleries, so far as it is subject to the consumption tax, an addition to that tax shall be levied amounting to 0.20 marks per liter of pure alcohol.

In those industrial distilleries which were in existence prior to April 1, 1887, and which do not fill with mash in a single day more than 10,000 liters of vat space, the addition shall be reduced by 0.04 marks per liter of pure alcohol for the extent of their previous operations under special provision of the Federal Council. If distilleries of this kind fill with mash more than 10,000 liters, but not over 20,000 liters of vat space, then this reduction of the addition shall be 0.02 of 1 mark. This provision shall not apply to pressed yeast distilleries.

Other than industrial distillers relieved on application.

Similarly, upon application, other than industrial distilleries which do not work on molasses, beet, or beet juice, shall be relieved by the government of the state from the execution of the mash-vat or spirit-material tax. If agricultural distilleries working on grain make use of this provision the following amounts shall be levied per liter of pure alcohol:

How taxed.

(*a*) On spirits produced in distilleries which in a single year produced not more than 100 hectoliters of pure alcohol there shall only be an addition of 0.12 marks.

(*b*) On spirits produced in distilleries which in a single year produced more than 100 but not more than 150 hectoliters of pure alcohol the addition shall only be 0.14 marks.

(2) Agricultural distilleries which in a single day fill with mash more than 1,500 liters of vat space, if they are in operation during the time from the 16th of June to the 30th of September, shall be subject for that period, instead of the mash-vat tax, to the addition to the consumption tax to be paid according to No. 1, paragraph 1, by the industrial distilleries.

On spirits produced in agricultural distilleries which in a single day fill with mash more than 10,000 but not more than 20,000 liters of vat space, if those spirits are subject to the consumption tax, an addition amounting to 200 marks per liter of pure alcohol shall be levied; and on such spirits produced in agricultural distilleries which fill with mash in a single day more than 20,000 liters of vat space an addition of 0.04 marks. The addition shall be paid only for that calendar month in which the filling with mash has exceeded 10,000 or 20,000 liters.

Provisions in sections 11 to 39 to apply.

(3) The provisions recited in sections 11 to 39 of the present law relating to the consumption tax shall apply to the addition thereto.

(4) For the distilleries designated in No. 1 the other provisions of the law of July 8, 1868, shall hold, with the following changes:

(*a*) The size and amount of supplemental vessels, such as yeast vessels, mash tanks, etc., need no authorization.

Changes.

(*b*) Changes in the reported operation shall be admissible under the proviso that the departure shall previously be noted in the plan of operation, and must be reported to the revenue authorities within twenty-four hours.

(*c*) The period of distillation may be restricted by the revenue authorities when necessary.

(*d*) The illegal use of mash vessels which have been declared out of use by the revenue authorities for filling with mash, as well as the introduction or preparation of mash not reported to the revenue officer, or worked up in other rooms or in other vessels than those reported in the operating plan officially confirmed, shall be subject to a fine up to 300 marks.

4. PRECAUTIONARY MEASURES.

SEC. 43. The duty of the owner of the distillery to submit a ground plan of the distillery to the inspecting authorities or the revenue officer (secs. 6 and 43 of the law of July 8, 1869) shall extend to the rooms connected with the distillery or immediately adjoining it.

THIRD SECTION.

CUSTOMS AND TRANSIT TAX.

1. AMOUNT OF CUSTOMS.

SEC. 44. On arrack, cognac, and rum entering from the territory outside of the customs line in casks there shall be levied from the day of the promulgation of the present law onward a duty of 125 marks per 100 kilograms, and on all other spirits 110 marks per 100 kilograms.

2. TRANSIT TAX.

SEC. 45. On spirits entering from the free commerce of those parts of the German tariff territory not belonging to the spirit-tax district, unless proof of previous payment of duty is furnished, a transit tax shall be levied from the day of promulgation of the present law onward amounting to 96 marks per hectoliter of pure alcohol.

On brandy for drinking purposes, however, which is produced from nonfarinaceous material, this increased transit tax shall be levied only from October 1, 1887, onward.

FOURTH SECTION.

TRANSITION REGULATIONS AND FINAL PROVISIONS.

SEC. 46. All spirits existing in free commerce within the territory of the spirit-tax district on October 1 of this year shall be subject according to special provision of the Federal Council to the consumption tax in the form of a supplementary tax of 0.30 marks per liter of pure alcohol.

The following shall be exempt from supplementary tax:

Spirits exempt from supplementary tax.

1. Spirits used for industrial purposes, including the preparation of vinegar for medicinal, scientific, cleansing, cooking, or illuminating purposes.

2. Spirits in the possession of dealers having permission to dispense or retail spirits in amounts of not more than 40 liters, and in the possession of heads of households in amounts of not more than 10 liters of pure alcohol.

3. Spirits that can be shown to have been imported under a payment of an amount of duty of 125 or 180 marks per 100 kilograms from abroad.

Commencing July 1 and until September 30 of this year:

(*a*) The operations of every distillery, with the exception of the yeast distilleries, shall be restricted to three-fourths of the extent of those operations which that distillery performed in the corresponding time of the preceding year, the provisions of section 2, paragraph 2, finding appropriate application. Restriction of operation.

(*b*) The mash-vat tax shall be fixed at three times the present rate and correspondingly the drawback of tax for spirits exported from the German tariff area for industrial purposes, including the preparation of vinegar (sec. 1 of the law of July 19, 1879, relating to the exemption from tax of spirits for industrial purposes, Imperial Law Sheet, p. 259), shall be fixed at 48.03 marks per hectoliter of pure alcohol. Yeast distilleries, however, shall be subject only to an increase of the mash-vat tax by 100 per cent; other grain distilleries to an increase of the same by 175 per cent of the previous rate. Mash-vat tax.

At the former rate of the mash-vat tax the restricted operation under the preceding provision shall be permitted to those agricultural distilleries which work on grain and which fill with mash in a single day, on an average, not more than 1,050 liters of vat space.

The Federal Council is empowered to permit all distilleries, so far as contracts already concluded require, to conduct operation beyond measure described in paragraph 3 under (*a*) and at the simple amount of mash-vat tax.

The provisions of section 3, paragraph 3, of the present law apply to the respite of the supplementary tax, with the proviso that the Federal Council is authorized to grant further relief.

SEC. 47. Sections 1 to 43, 45 and 46*c* of the present law shall become operative simultaneously with the law of July 19, 1879, relating to the exemption from tax on spirits to be used for industrial purposes, in one of the federal states not belonging to the spirit-tax district upon consent of the state in question.

The total annual amount which may be produced in a state newly joining the spirit-tax district at the lower rate of tax (sec. 1) shall be fixed at 3 liters of pure alcohol per head of population ascertained at the previous census of the state in question. The determination of the annual amount that may be produced by the various distilleries at the lower rate of tax shall be calculated under the provision of section 2 by the authorities of the state charged with the levying and administration of the contribution and taxes enacted in the present law to the same extent as that of the duties. The preceding provisions, as well as the provision in section 39, paragraph 1, can be changed in regard to one of the states newly joining the spirit-tax district only with the assent of that state.

For the territory of the federal state giving its assent the legal provisions becoming operative thereby shall be made

effective by imperial order. The day when they shall become operative shall be October 1, 1887, for section 46 of the present law.

SEC. 48. The Federal Council is empowered to order all the measures of release and exceptions in the interest of the carrying out of the present law for a transition time to be fixed by the Federal Council.

The Federal Council is further authorized, in the event that, as provided in section 47, paragraph 1, the assent of a federal state not belonging to the spirit-tax district, that the law shall take effect on October 1, 1887, is withheld, to agree with the state in question upon transition measures required for the corresponding execution of this law.

SEC. 49. The introduction of the present law in the land of the Hohenzollern shall take place by imperial order, and it shall also be reserved to the imperial order to issue the special provisions, to the end that these lands shall be in a position of the greatest possible equality with the neighboring federal states.

Documentary under our own signature and affixed imperial seal.

Given at Berlin, June 24, 1887.

[SEAL.] WILLIAM.
VON BOETTICHER.

SUPPLEMENT TO NO. 38 OF THE CENTRAL SHEET FOR THE GERMAN EMPIRE.

BERLIN, *Tuesday, September 27, 1887.*

CONTENTS: Customs and imposts; provisional regulations for the carrying out of the laws of the Empire of June 24, 1887, and July 8, 1868, regarding the duty on spirits, and the law of July 19, 1879, regarding the exemption from duty of spirits for use in the arts.

CUSTOMS AND IMPOSTS.

The Federal Council in its session of September 27, 1887, provided:

1. That the carrying out of the law of June 24, 1887, regarding the duty on spirits, shall be for the present and till further notice under the following provisional regulation, pending the definitive issue for regulations for the execution of the law and without interfering with the right possessed by the governments of the various states under sections 13 and 41, No. 4, of the law.

2. That those distilleries which pay a duty on material are to be allowed, subject to repeal, to manufacture their whole product at the lower rate of duty of 50 pfennig.

IMPERIAL CHANCELLOR.
Represented by JACOBI.

BERLIN, *September 27, 1887.*

PROVISIONAL REGULATIONS FOR CARRYING OUT THE LAWS OF THE EMPIRE OF JUNE 24, 1887, JULY 8, 1868, AND JULY 19, 1879, RELATING TO THE DUTY ON SPIRITS AND THE FREEDOM FROM DUTY OF SPIRITS USED IN THE ARTS.

For the purpose of carrying into effect the law of June 24, 1887, regarding the duty on spirits the following regulations are issued:

I. Respite.

1. To section 3. Manufacturers who produce spirits or trade in them are to be allowed a respite both for the duty on the consumption and on the additional tax, provided they give sufficient security for the amount thereof.

Amounts of duty under 50 marks per item of spirit shall be excluded from the respite.

II. The time for respite.

The time up to which the payment of the duty may be respited is six months, with the understanding that the tax on consumption thus respited must be paid in cash or by acknowledgment of indebtedness due at that time up to the 25th day of the month in which the time of respite expires, and if that day falls on a Sunday or holiday, on the day before.

Anyone once neglecting to make punctual payment of the respited tax shall have no claim to any further grant of respite.

III. Guarantee.

Immediately upon the application for respite, and certainly before the granting thereof, the person who owes the tax must give security to the customs authorities for the amount of tax to be respited.

The security may be given:

Security, how it may be given.

1. By depositing an equal amount of current domestic state papers or other assets accepted by the Imperial Bank as security for loan. Domestic state papers shall be accepted at their face value. In the case of other papers the quoted value is to be taken as the basis, provided it does not exceed the face value, but in that case the rules laid down by the nearest office of the Imperial Bank in the acceptance of securities shall be observed. If the quotation of such assets falls considerably below the value that was assumed when they were accepted, the security is to be supplemented.

The coupons, dividend certificates, and orders on coupons belonging to the securities are also to be deposited.

"Dry" checks.

2. By drawn or "dry" checks, accepted or guarantied by responsible persons.

3. By mortgages or real estate security, provided, that in the case of country property these debts shall be within two-thirds of the value ascertained by assessment of an official charged with assessment, or by an officially bonded expert, and in the case of city property within the first half of the value, to be ascertained by the assessment of a qualified officer, or by the assessment made by a public fire insurance company.

In case of city property.

In the case of city property the supreme authority of the land shall reserve the power of fixing another loan limit in case of peculiar local conditions.

4. By pledging a quantity of spirits or other goods in such way that the pledge can be at once realized upon if the respited tax is not *paid at the proper time.*

The respite of the duty on consumption admissible according to the preceding regulation can be granted by the principal offices independently.

If the security is to be given in another way, for example, by bond, the decision shall be reserved to the head authorities.

IV. Respite without guarantee.

The principal offices are authorized to grant to manufacturers, who are known as reliable and solvent, total or partial release from the obligation of giving security for the amount of duty to be respited, provided only three months' respite is applied for.

V. Withdrawal of guarantee.

If any circumstances occur that induce the fear of nonpayment of the respited tax, then the respite already granted may be withdrawn at any time, and the outstanding tax may be forcibly collected unless the person who owes the tax takes care to give the requisite security immediately.

2. To section 5. Distilleries which are not subjected in advance to a binding imposition of the duty on consumption of the spirits to be produced according to section 13 of the law will be subject to the following regulations:

I. Receivers.

One or several closed spirit receivers connected by tubes, and as a rule made of iron plates of a thickness corresponding to the cubic contents, are to be set up in a space closed on all sides, sufficiently safe against burglaries, under joint lock of the owner and the customs officer. The whole of the spirits produced are to be there stored. Distilleries having wooden receivers may continue to use them unless objections should arise because of the duty to be levied.

The number and size of the official receivers are to be so estimated that as a rule they shall be capable of containing the spirits produced in the distillery in from eight to ten days, and at most for fourteen days, when in full operation according to the existing apparatus. Every receiver is to be provided with at least one stopcock, or some appliance of such nature as to guarantee the duty and permit the receiver to be completely emptied and its contents to be transferred to shipping casks. New receivers are furthermore to be furnished with gauge and scale. All the parts above named, as well as the manhole and the air holes, are to be so arranged as to admit of their being locked, and they are to be kept under lock subject to the revenue officer. So far as the existing receivers are not provided with gauge and scale the contents of the apparatus is to be ascertained, in case they are measured in the wet way, by establishing a definite scale, and the scale is to be so marked on a staff, to be kept in the distillery under official custody, that the level of the spirits in the receiver will at once show by means of the scale the quantity in the receiver. The receivers are to be measured officially, and as a rule in the wet way, and to be marked with running numbers and contents in liters, and to be inventoried. They must everywhere be subject to inspection and rest on feet above the masonry.

II. Distilling apparatuses.

1. The distilling apparatus must stand entirely free and admit of accurate inspection on all sides. In case of distilleries already in existence the directing authorities, if the tax security does not appear endangered, may admit exceptions subject to repeal.

2. If there is a reasonable suspicion that the tubing of a distilling apparatus in which the alcohol vapors are conveyed to the cooler for condensation, or that the spaces through which they are carried, are illegally used to divert alcoholic vapors, the following closures are to be introduced:

(1) In all distilleries consisting of a boiler, besides an appliance for previous heating, or of two boilers standing upright side by side and furnished with a helmet or lid (stopper), together with appliances for previous heating—

(*a*) Two or three locks or seals are to be fitted to the flanges connecting the boilers with the helmets or covers. For this purpose the flanges shall be pierced at places equally distant from each other, and through the drill hole the bow of the padlock or the string of a seal is drawn in such way that it shall not have too greatmobility.

(*b*) All flanges connecting the tubes in which the alcoholic vapors are carried from one boiler to the other and to the low spirit chamber, from the appliance for previous heating into the basins, and finally into the cooler, shall be closed by means of seal and cap under the regulations given below under III 4 and 5.

(2) In case of cylinder and column apparatus only the flanges between the apparatus for previous heating or the column and the first basin, and between the basins themselves, and on the tube leading to the cooler are to be closed as above under 1*b*.

(3) If the boilers or the apparatus for previous heating consist of wooden vessels it may be required that they be surrounded with casings of tin, which are to be appropriately secured by padlocks or seals.

3. To prevent the diversion of low wine from the distilleries it suffices in the case of column apparatuses, as a rule, to subject them to thorough internal revision at the time of stoppage, and especially when they are being repaired by a plumber.

In the case of all distilling apparatus in which the formation of low wine takes place in a receiver in the apparatus for previous heating, the low-wine chest, or in a special vessel—the separator—such as the simple mash-warming apparatus, the Dorn apparatus, the Pistorius apparatus, with boilers standing side by side, the Gall apparatus, and similar ones, which often differ from each other only immaterially, the following measures are to be taken:

(1) If, as in the case of the Pistorius apparatus of the older kind, there is fitted to the helmet of the first boiler a tube furnished with a stopcock for the purpose of ascertaining whether the mash has been completely distilled and leading to the cooler where the alcoholic vapors are condensed, this appliance must be removed.

(2) Similarly, where there are small glass gauges to indicate the height of the low wine in the low-wine chest or the separators, these gauges have to be removed and the openings leading to them soldered up.

(3) The opening serving to clean the low-wine chest or the separator, specially set up, which opening is closed by a threaded disk, is closed with a seal at the flanges.

(4) The stopcock fitted to the tube carrying the low wine collected in the low-wine chest or the separator to the boiler must be officially closed in an appropriate manner according as it is an ordinary stopcock, which, when opened, allows the liquid to pass through in a straight or curved line, or an angular stopcock, the construction of which forces the liquid to flow through it at a right angle. The purpose of closing this is to prevent the cone of the stopcock from being drawn from its bearings, whereby the liquid might be drawn off.

In the case of ordinary stopcocks the official closure is effected as follows:

Supplement A. At the lower end of cone *a*, marked on figure 1 of Supplement A, a disk *c*, completely covering the case *b*, is firmly drawn in by means of a screw-nut *d*, so that the cone may indeed be turned at pleasure on the thread but can not be lifted off. In order that the screw *d* may not be opened this device receives a metallic cap *e*, furnished with a thread, which cap is firmly screwed on the case, which also is furnished with a thread, and its eyes *ff* are thereupon connected with the tube *gg* by seals.

A still simpler closure above the stopcock is effected by a metal ring *a*, 6 millimeters thick. (Compare fig. 2, Supplement A.) Its surface covers not only the case but also the head of the cone to the extent of one-third of its circular surface, and its projections *bb*, furnished with openings, extend beyond the case so that they can be joined to the tube with a lead seal so firmly as to permit only a vertical turning of the cone possible.

Angular stopcocks can receive only such a closure as is shown in fig. 3 of Supplement A.

(5) Finally, the flanges of the low-wine tube between the apparatus for previous heating and the boiler, as well as the flanges of the tubing leading to the separators and thence to the boiler, are to be closed with lead seals.

(6) If besides the distilling apparatus proper and in connection therewith there is a special apparatus for the destination of the low wine from which the residue is drawn off by a stopcock, the tubing of this stopcock is to be carried outside, and is to be run out in such manner as to render any illegal use of the residue impossible.

For the rest the passage tubes of this apparatus, the stopcocks and flanges of the same are to be sealed in the same manner as above.

Glass gauges to indicate the level of the low wine in the various parts of this apparatus are to be removed, and the remaining openings are to be soldered up. On the other hand, it is permitted to attach an inspection glass, which is to be firmly riveted in the wall.

Supplement a.

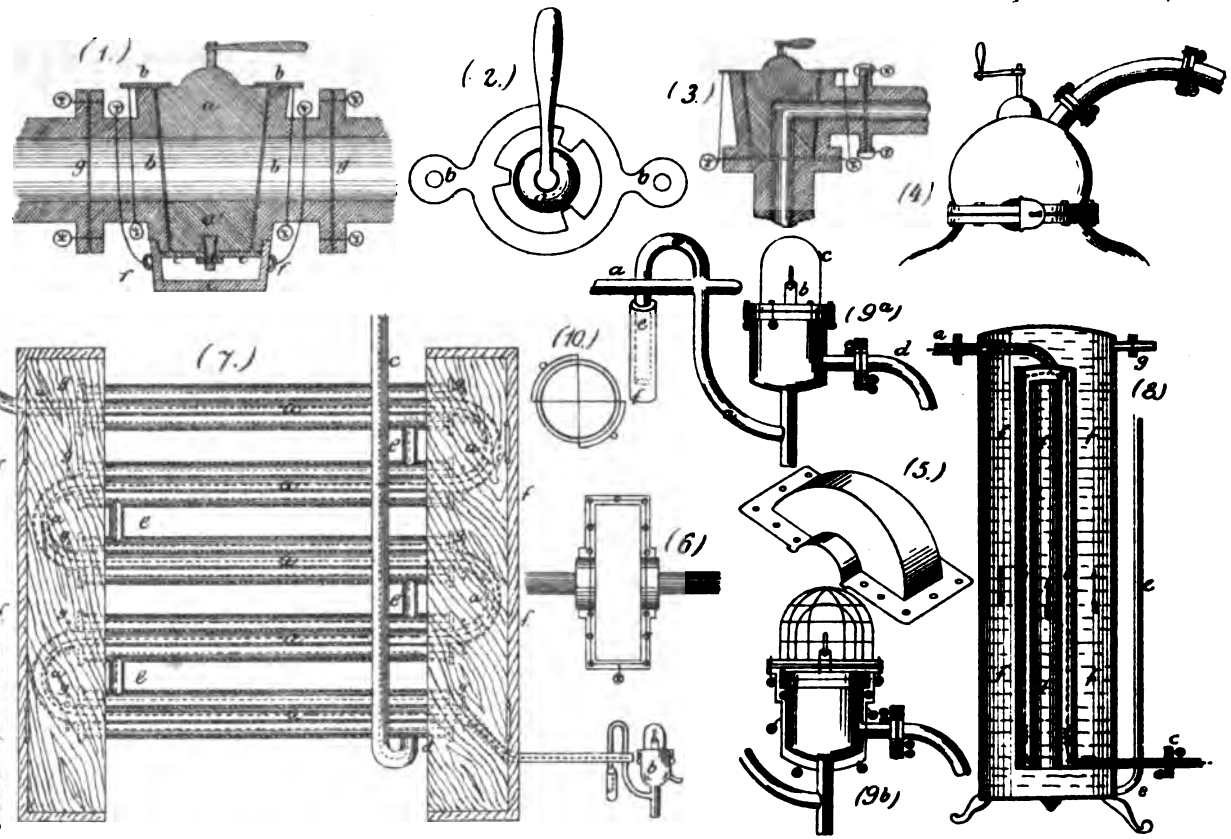

THE HOBBS PETTIS CO. PHOTO-LITHO. WASHINGTON, D. C.

4. If there are two stills for mashes in the distillery, both have to be connected with the receiving vessels and subjected to the closure prescribed.

III. Tubing.

1. All tubing in which alcoholic vapors or the spirituous liquid is carried from the distillery to the receivers, or through which the residue of low wine is carried outward, must everywhere be exposed and permit accurate inspection from all sides. Passages of the tubes through masonry or floors must also be left free and may be closed with panes of glass.

2. On the tubing noted under *a* there must not exist outside of the space for the receiver any valves or other appliances by which the flow of the spirits may be interrupted, unless by special devices, approved by the customs authorities. The possibility of an illegal diversion of the spirits by means of their accumulation is done away with. (See, for example, under VI.)

3. All tubing leading from the cooler to the receivers must be made of drawn and polished brass or copper tubes, showing no line of soldering. Existing distilleries, however, may be allowed, subject to repeal, to continue for the present using the existing polished brass and copper tubes, showing a line of soldering. In no case, however, are tubes to be permitted which have other soldering patches due to repairs. All the tubing above mentioned is to be kept bright and clean.

4. All flange connections of the tubing mentioned under C, having been screwed tight, must be closed with seals (see fig. 4, Supplement A), and these lead seal closures be further protected by caps of zinc plates consisting of two halves, whose edges bent about are also to be closed with lead seals. (See figs. 5 and 6, Supplement A.)

5. All lead sealings are to be attached by means of a string intertwined with copper wire. The lead seal closure is effected by boring holes through the flanges of the tubes connected with each other at two or three different places next to the screw fastenings and drawing through these holes a copper wire string about one millimeter thick. The end of this string shall be thereupon drawn tight around the edge of the flanges, knotted and drawn through the opening of a lead in such a way that when the string is knotted again the lead may be pressed as close as possible to the flange, and even the least loosening of the screw is rendered impossible without tearing the lead string.

The revenue office, and when necessary the inspectors also, are to be furnished with sealing tools.

IV. Cooling utensils.

1. Coolers with cooling worms must not rest directly on masonry, but on feet. In the case of open cooling vats of the kind in question provision has to be made by appropriate sealing that the cooling worm shall not be taken out. The worm may also be inspected, the cooling water being entirely drawn off.

2. Worm-like (Siemens) condensers (see fig. 7, Supplement A) are always placed vertical against a wall. The alcoholic vapors issue from the spirit tube into the tube *a*, and the spirits produced by precipitation pass through this

worm-like tube to the antechamber *b*. The cooling water enters through tube *c* in the lower part of the vessel at *d* in the cylinder surrounding the spirit tube and connected with each other by short tubes *e*. To prevent the tapping of the spirit tube the following precautions have to be employed:

(1) The spirit tubes projecting in the shape of a bow must be kept brightly polished.

(2) All the flanges (*g*) are to be put under lead fastenings, or if there is ground for suspicion a wooden box (*f*) has to be set up on both sides of the cooler at the place where the cooling tubes come out. This box must admit of being readily opened and of being officially locked by means of patent locks.

3. Cooling cylinders (see fig. 8, Supplement A) present the least opportunity for withdrawal, since they consist of a cylinder closed tight everywhere and riveted, which is fed with cold water from a reservoir at a higher level, and in its interior contains a second cylinder in which the alcoholic vapors are condensed. From the spirit tube the alcoholic vapors enter through tube *a* into the cylinder *b*, and having been condensed issue through the exit tube *c* into the antechamber. The cooling water flows off through tube *e* to the outer and inner cylinder *f* and makes its escape through tube *g*.

To tap this cooling apparatus would merely draw out water, so that in this case the precaution may be confined to a lead fastening at the flanges of the inflow and outflow tube.

The cooling cylinder, furthermore, must be accessible to inspection on all sides, and either be fastened to the ceiling with iron bars or rest on feet above the masonry.

V. Antechamber. The antechamber (see fig. 9, Supplement A), also called Pistorius fastening, consists of a funnel, *b*, connected with the cooling tube *a*, which contains the spirituous liquors. In the funnel there is an alcoholometer, and the funnel is surrounded by a copper coating which admits of being fastened and is furnished with a glass dome *c*. This coating is to be kept bright and polished. Ordinarily the antechamber is closed by the owner of the distillery, but it must further receive an official fastening in order to prevent the removal of spirits through the opening of the antechamber or through illegal use of the air or gas tube *e*.

The fastening of the antechamber must be effected in this way, that all the connecting screws that hold the glass dome to the antechamber, and all the screw nuts, are to be pierced, and through the holes a string is to be passed, the ends of which are to be secured with lead. Furthermore the screws are to be inclosed in a tin cap, which is also to be leaded.

If the condition of the antechamber does not admit of such fastening, the lower part of the antechamber up to the metal ring in which the glass dome is inclosed is to be surrounded by a tin cap, which, accommodating itself to the form of the antechamber, is to consist of two halves, which are held together with screws and lead. The cap on its

upper side is to be given a border projecting outward at a right angle, which is to be connected by screws and lead fastenings with a similar border of a hood set over the glass dome. (Fig. 9*b*, Supplement A.) The upper part of the hood may consist of a net work of brass wire or of two copper bows intersecting each other in the form of a cross.

In the next place the air tube *e* must be protected against illegal use by putting on it a copper cap *f* of corresponding length, in the upper border of which are four holes equidistant from each other, corresponding with four similar holes in the air tube in such way that two strings may be drawn through them at a right angle and their ends may be fastened. (See fig. 10, Supplement A.) The air dome is to be secured against the introduction of siphons by fitting to it by seals a network of copper or brass wire.

Wherever there is no Pistorius fastening, but the alcohol flows into an open funnel, such a fastening must be introduced.

VI. Private measuring apparatus, and the like.

Receiving vessels already existing in the distilling room, and intended to receive the daily production of alcohol or to ascertain the production from the various mash tubes, may continue to be used subject to repeal on the part of the tax collector, provided they are placed on a masonry pier, from which they are to be separated by an iron plate, and provided they are inclosed in a zinc coating, painted on the inside, and closed according to tax regulations in the same way as official measuring apparatus (see executive regulations to section 6 of the law), and there are no other objections to their continuance from the point of view of revenue. An accumulation of spirits in these vessels by closing the stopcocks leading to the receivers may be prevented, for example, by introducing a second tube leading from the upper part of the vessel and discharging directly into the receivers, or beyond the stopcock into the tubing leading to them. Furthermore, the owners of distilleries are permitted to retain or establish at their cost measuring apparatus of precision without ascertaining the alcoholic contents and without a sampler or similar apparatus, and these are to be treated like official measuring apparatus so far as the fastening for the purpose of taxation is concerned.

VII. Treatment of distilleries that distill their product several times.

In the case of distilleries which subject their product to repeated distillation the following regulations are to be observed:

1. Distilling apparatus which serves solely for rectification of the spirits produced or for drawing the spirits through supplementary ingredients, or so-called feints boilers, must not be set up in the distilling room, but in another room not connected with the distilling room. Exceptions can only be granted by the directive authority, subject to repeal. The distilling apparatus referred to is to be examined at every inspection of the distillery for the purpose of ascertaining whether they are merely used for rectification or feints distillation, and not for distilling mash.

In distilleries already in existence the removal of the

rectifying apparatus, once set up in the distilling room, etc., may be dispensed with under the following conditions:

(1) In the apparatus for the distillation of mash, lead seals which are applied to the flanges connecting:

(*a*) The apparatus for previous heating or the column with the basins;

(*b*) The basins themselves; and

(*c*) The various parts of the spirit tube leading from the basin to the cooler.

(2) The tube of the rectifying apparatus which carries the spirits to be refined into the apparatus is sealed at the flange a short distance before the entrance into the apparatus in such way that between the two parts of the flange a metal disk pierced with holes is introduced, which admits only the inflow of spirits or low wine, but not of mash. In a similar way the manhole and other openings admitting of an inflow of mash are to be closed.

By way of exception it may be allowed to provide the boiler with a hole permitting the addition of cumin grains and similar additions.

(3) A common cooler must not be used for the apparatus intended solely for rectification, nor for the other distilling apparatus.

2. The ascertainment of the amount of alcohol produced for the purpose of fixing the amount of tax on consumption may take place by way of the product obtained by the first distillation, and may be effected by a collecting vessel or measuring apparatus (see executive regulation to section 6 of the law); and in that case the distilling apparatus serving solely for rectification needs no connection with an official receiver or measuring apparatus.

3. The low wine and feints distillation, as well as all further distillation on the same distilling apparatus, is permitted only in already existing stills, and only where the establishment of a special feints boiler would meet with particular difficulties. In such distilleries the measurement for the purpose of taxation of the alcohol produced, as described under 2, may take place after the first distillation, observing the following regulations:

(1) In the distillery a Siemens sampler may be set up instead of the receivers, and this sampler shall remain connected with the cooler so long as its separation from the cooler for the purpose of feints distillation is not called for.

(2) The owner of the distillery has to accurately declare, in column 9 of the working plan, on what days, and at what hour within the distilling period admissable by law, and how long he intends to use the distilling apparatus for feints distillation. As a rule the work has to be so arranged that the low wine obtained during several days shall be distilled for feints on a day when no mash distillation takes place. Exceptions may be granted by the competent main office in case the number of officials suffice.

(3) At the declared hour of the beginning of feints distillations an official repairs to the distillery, and by opening the outflow stopcock of the boiler and of the mash warmer, if it exists, he convinces himself that no mash

whatever is present in the distilling apparatus, and thereupon he disconnects the cooler from the sampler at a place specially provided for this purpose, and until then kept under seal, at which place thereupon a special outflow tube for spirits may be introduced; and thereupon he closes the helmet and cover apparatus of the boiler and of the mash warmer, with patent locks, or if the case requires, with seals, so that no mash can be introduced into the distilling apparatus in this way. The tube which carries the low wine into the apparatus is sealed at the flange a short distance from the entrance in such way that a perforated metal disk, pierced with holes, is introduced between the two parts of the flange which admits the inflow of low wine or spirits, but not of mash.

(4) The distillation of feints may also be placed under the continuous supervision of a revenue officer on the part of the revenue administration.

(5) At the hour fixed for the end of the feints distillation, or in case the latter takes place under continuous revenue supervision immediately at the end of the same, the officer shall restore the connection between the sampler and the cooler in the manner prescribed and shall renew the fastenings between the two, and on the other hand shall open the fastenings attached to the distilling apparatus during the feints distillation, so that no obstacle may prevent the use of the latter at the proper time for the purpose of distilling mash.

(6) Where local conditions do not present any difficulties to the revenue control it is also permitted, instead of the sampler, to set up for low wine a receiver closed in accordance with revenue regulations, from which the low wine is taken by the officials entrusted with that duty, ascertaining at the same time the amount and strength thereof and conveying it to the distilling apparatus under the precautions prescribed.

It may also be permitted, however, in distilleries carrying on distillation of low wine and feints by means of the same boiler, to have receivers, closed in accordance with revenue regulations, both for low wine and for spirits, connected with the distilling apparatus by means of a double stopcock, which is to be kept sealed subject to revenue control. The contents of the low wine receiver is thereupon to be added, under official supervision, to the mash existing in the distilling apparatus for the purpose of distillation whenever spirits are produced (see executive regulation to section 11 of the law), and the mash is at once to be distilled together with the low wine. In this case it may be ordered that the amount of alcohol subject to consumption tax shall be ascertained only from the finished product.

VIII. Requirement of further guarantees.

The directive authorities are authorized in cases in which the execution of the preceding regulations seems impracticable or meets with extraordinary difficulties, or in which these regulations do not offer the guarantee of sufficient security of the revenue interest, to grant, subject to repeal and by way of exception, such relief as is unobjectionable from the standpoint of revenue, or to take other measures.

IX. Record of the arrangements made.

The owners of distilleries are to be informed as promptly as possible what arrangements they are to make in their distilleries, and before the work begins it is to be ascertained by protocol (see Supplement B) whether all the requirements have been fulfilled and whether the requisite fastenings have been applied. The protocol is thereupon to be transmitted to the revenue office and its authenticated copy is to be added to the record of the distillery.

Supplement B.

X. Inspection of the distilleries.

The revenue inspection of the distilleries is to extend hereafter with all possible thoroughness not only to the plant in mash and distilling apparatus and to all flange and stopcock fastenings—as a rule without taking off the cap—and to the tubing leading from the cooling vessels to the receivers, but also to the firm and safe fastening of the room in which the receivers are located. It is to be ascertained and recorded in particular whether any attempt has been made to divert alcohol, as might be done in the case of stopcocks and flanges only by violating the official fastenings and in the case of tubing only by tapping. The latter would at once show on the polished surface of the tubing; and dilute sulphuric acid must always be kept on hand in every distillery in order to be able, if any spot should appear dull, to polish it at once by means of a bit of cloth dipped into the acid. By this means it is also possible to render manifest even the slightest tap hole that has been puttied or soldered. In the case of the least doubt the inspectors are instructed to cause any spot of the tubing to be polished at once. Any indication leading to the suspicion of an injury to the fastenings or tapping of the tubing, which is to be investigated particularly in its lower parts, is to be followed up.

The chief office is authorized to order special examinations of the fastenings from time to time.

The revenue fastening of the room in which the receiver is set up can be undone only in the presence of a second inspector. If the opening of that room does not admit of delay, then, if a second inspector can not be had, the local authority or some other reliable witness is to be called upon, who is to join in signing the protocol which is to be drawn up regarding the undoing of the fastening, the condition of the receiver, and the reapplication of the fastening.

Owners of distilleries are bound to afford to inspectors all that assistance which is required in order to carry out the inspection properly, and to the extent required, and they are also bound to procure and keep ready at their expense the necessary materials.

I. Provisions for setting up measuring apparatus.

3. To section 6. In distilleries where it is impossible to provide special rooms under safe joint revenue fastening for the purpose of setting up receivers, or where this would involve disproportionate expense, or where for other reasons the setting up of measuring apparatus is preferable to the setting up of receivers, the revenue authorities shall set up appropriate Siemens's apparatuses—alcoholometers or samplers—observing the precepts given in Supplement C,[1] in the place of receivers for the purpose of ascertaining

[1] Supplements C and D are printed separately.

the amount and strength of spirits obtained from the mash without regard to later feints distillation or rectification.

As soon as the measuring apparatus has been received the owner of the distillery has to notify the revenue authorities of this fact, also to inform them on what day it can be set up; he is also bound to keep uninjured the fastenings applied by the normal gauging commission.

II. Minutes over the setting up of the apparatus.

Concerning the setting up of the measuring apparatus a report is to be entered according to Supplement D[1] and to be transmitted to the chief office, and a certified copy thereof is to be added to the records of the distillery.

III. Inspection by the supervising officials.

1. As a rule the measuring apparatus must not be opened by officials during the course of a distilling period without the presence of a technical expert.

The chief officials, besides the other inspection of the distillery, shall merely lift off the zinc chest and convince themselves of its uninjured condition, especially by examining the internal paint of the mantle, as well as the uninjured condition of the mantle of the apparatus. The other inspectors in their inspection of the distillery, besides the examination of the distilling apparatus, of the tubing, the flanges, and other fastenings, etc., are to confine themselves to an external inspection of the zinc chest. Furthermore, the officers are to satisfy themselves, by comparing the indications of the alcoholometer in the antechamber with the indications of the lever in the alcohol curve, which may be observed through the glass pane in the mantle of the apparatus, whether the lever indicates the correct strength of the alcohol in the alcohol curve. If these examinations show nothing irregular the officers are to make the proper entry in column 23 or 22 of the plan of work. (See Supplement E, 1 and 2.)

Supplement E, 1 and 2.

In the opposite case the facts are to be recorded at once by protocol, and the protocol is to be submitted to the respective chief office after examination of all parties concerned, and the chief office is to issue further orders according to the state of the case.

The respective chief office is also to be informed of all other disturbances in the working of a measuring apparatus, the conditions in question being set forth. The chief office is to make a report thereon to the directive authorities.

2. All officers charged with inspecting the measuring apparatus must thoroughly familiarize themselves with the construction, purpose, and manipulation of all essential parts of the measuring apparatus on the basis of Supplement C and by personal inspection.

IV. Counting register.

1. Immediately before the beginning and after the termination of the daily distillation of mash the owner of the distillery or his representative is bound to enter the indication of the tally of the existing measuring apparatus in columns 1 to 4 of the tally register (see Supplement F), which is to be kept regarding this matter in quarterly periods; for distilleries which distill uninterruptedly day

Supplement F.

[1] Supplements C and D are printed separately.

and night the period in which these entries are to be made are determined by the chief office. Entry is to be omitted on intervening days when no work is going on. The register is to be kept with the working plan in the distillery, and must be formally closed at the expiration of every quarter by the owner of the distillery, and sent to the revenue office by the fifth day of the first month of the new quarter.

The last entry of every quarter is to be carried forward by the owner of the distillery in the register for the next quarter, and the correctness of this transfer is to be certified by the inspector who first appears in the distillery in the new quarter.

In columns 5 and 6 of the counting register the owner of the distillery has to enter any disturbances in the regular course and injuries to the official fastenings of the apparatus immediately on perceiving them.

2. The blank for the counting register is furnished by the revenue office.

At every visit to a distillery in which a measuring apparatus has been set up the inspecting officers have to ascertain the amount of spirits and alcohol that have passed through the measuring apparatus on every single day since the last inspection, according to the indication of the tally, as well as the cubical contents of the mash tubs distilled on every one of the days in question, according to the working plan, and according to this they are to calculate the alcoholic strength of the spirits produced every day and the average cubical product for every hectoliter of mash space, and these results are to be entered in columns 7 to 14 of the counting register. Furthermore, the indication of the lever in the alcohol curve and the condition of the alcoholometer in the antechamber at the time of the inspection are to be noted in columns 15 and 16. If in the course of these researches the suspicion arises that the measuring apparatus no longer indicates correctly the chief office is to be immediately informed.

V. Extent of application of the general regulations.

The executive regulations to section 5, under II to X, find appropriate application in distilleries where a measuring apparatus is set up.

Defrayment of cost.

4. To section 9. The cost of the first purchase and setting up of the receivers and measuring apparatus, as well as of the first purchase of the plate caps over flange and screw connections of the patent locks of the caps over the air tube of the antechambers and of any necessary connecting tubes, shall be borne by the spirit-revenue districts in the case of distilleries already in existence so far as the purchase of these appliances is deemed requisite in the interest of the revenue. Moreover, where the distilleries contain suitable receivers or measuring apparatus indemnities corresponding to the present value may be paid by the administration.

On the other hand, the owners of the distilleries shall bear the cost of the maintenance of the above-described objects, as well as the establishment of the rooms necessary to set up the receivers and measuring apparatus and for the discharge of the spirits.

5. To section 10. When the work of a distillery is interrupted or when an official fastening, or one of those parts of the distilling apparatus, tubing, receivers, or measuring apparatus from which a secret diversion or withdrawal of alcoholic vapors, low wine, or spirits is possible, the owner of the distillery is to enter this fact at once in column 10 of the working plan and give information thereof in writing within at most twenty-four hours from the occurrence of the event to the chief inspector of the district, and to the revenue office, and if at the place of the distillery there is only the dwelling of an inspector he also is to be informed in writing.

Interruption of operations; damaging of fastenings or utensils.

Upon this information the chief inspector, and if he is not on hand, the receiver—supposing that he lives at the place of the distillery—or the inspector is to repair at once to the distillery, or in case that the official does not live at the place of the distillery he is to do so within at most twenty-four hours after receiving the information, and is to examine into the correctness of the information at the place itself by personal inspection, by reliable witnesses, or in any other way that may be appropriate, and is to enter the finding into a report and to note the condition in the plan of working. In the absence of the chief inspector the local magistrate or other reliable witness is to be called upon, who is to concur in the certificate concerning the condition of the works. In that case the examining officer must at once give information of the event to the chief inspector, and the latter must repair to the distillery as speedily as possible, must examine the conditions again, and confirm the findings which were recorded. In particular the following points must be observed:

I. Treatment of injuries to the lead seals.

If there is merely an injury to a lead seal without access to the alcohol, etc., having been thereby rendered possible, it is to be especially ascertained and to be recorded in the protocol whether a perpetrator can be held responsible for the injury to the fastening. The fastening is thereupon to be renewed without delay, for which purpose it is allowed provisionally to use the official seal in case the inspector should not have a sealing apparatus with him; but the restoration of the lead fastening is to be effected as speedily as possible.

II. Treatment of other injuries or disturbances caused by accident and reported in due time.

If access to the alcohol has been rendered possible by accidental injury to a fastening, or in any other unintentional way, or if any disturbance to the measuring apparatus has been brought about which renders the correct ascertainment of the spirits passed through the apparatus impossible or doubtful, and if the prescribed information has been sent in at the proper time, then—

1. The chief inspector of the district must submit to the chief office not only a report setting forth the state of affairs and stating the measures that have been taken, but also a duplicate of the original or changed working plan, and, if possible, an extract from the business books of the distillery concerning the output of alcohol during the last thirty working days before the occurrence of the injury to the fastening for distilleries with measuring apparatus, or an extract from

the counting register for the current quarter. The chief office must fix the smallest amount of pure alcohol to be discharged, based on the average alcohol output during the period noted, as well as on the manner of working and the material worked at each time.

(1) If the moment at which the disturbance occurred has been definitely ascertained, the amount is to be calculated from the day of the last preceding official discharge of spirits in the distillery.

(2) If the moment when the disturbance occurred has not been ascertained, the time is to be calculated from the revenue discharge of spirits in the distillery preceding the last inspection by the director of the chief office or his representatives, but at most for thirty days back. Any amounts of spirits which remain undischarged in this last preceding revenue discharge are not to be calculated in this case, and the alcoholic content of them is to be ascertained according to the average strength of the amount last discharged.

(3) If it is ascertained that the measuring apparatus gives too high indications, the minimum amount of pure alcohol to be presented for revenue discharge is to be correspondingly reduced from the day of the owner's notification. In all cases, however, the amount of pure alcohol actually produced is to be used as the basis of the revenue discharge if that amount is greater than that ascertained by the chief office.

2. The chief inspector of the district must decide concerning any repairs that may seem necessary without interfering with the legal prosecution that is to be instituted on account of injury to fastenings or other interference.

In case of any disturbance in the working of the measuring apparatus, it is to be opened and the cause of the disturbance ascertained and removed, or, if this is not practicable, the measuring apparatus is to be thrown out of gear and provisionally set aside.

3. If the owner reports at the right time, the continuance of the distillery is not to be refused to him; on the contrary, the regulations under 1 are to be observed as regards ascertaining the minimum amount of the pure alcohol to be subject to revenue discharge.

III. Treatment of injuries or disturbances caused intentionally or not reported in due time.

If the report concerning injuries to fastenings or disturbances in the distillery apparatus, tubing, receivers, or measuring apparatus has been omitted or not been made at the proper time, or if it appears that there has been an intentional disturbance or injury to the fastenings, then the duty on consumption is to be calculated according to section 21 of the law, and no remission is to be granted for an excess of indication of the measuring apparatus.

IV. Interruptions of the work.

If, however, there has been a real interruption of the work of the distillery, then its beginning and probable duration is to be ascertained, as well as the amount of mash that has been rendered useless and has not been distilled, and under these circumstances provision is to be made for fastening the apparatus which is placed out of use by the disturbance in the work. Furthermore, if—

1. The work can not be resumed in the current month,

or if it is changed in such way that for the next few days some of the vats can not be filled with mash, the working plan is to be handed to the revenue office, together with the report made on the occurrence, and the revenue office is to order and execute another working plan, stating the quantity of mash which is deducted.

2. If the work is to be resumed during the current month in a different manner, the owner of the distillery is to draw up a partial declaration, which also is sent to the revenue office for record, together with the previous working plan and the report drawn up. On the previous working plan the revenue office notes the moment when it becomes inoperative and what amount of duty has to be paid on the basis of that plan.

3. If it is to be feared that the changed working plan or the partial declaration drawn up may not have been returned from the revenue office to the distillery before the work recommences, then an extract certified by the chief inspector or his representative remains in the distillery in order in the meantime to serve as a basis for the inspection of the distillery.

4. If a change in the plan of working or the drawing up of the partial declaration is not effected at the chief office itself, the revenue office is to send to the chief office for examination the duplicate of the changed working plan or the partial declaration accepted, in the latter case with the addition of the principal copy of the discarded working plan, together with the report on the examination and record of the interruption of the work and the causes of the change. The decision of the chief office, which, however, can not alter the change of the work that has been once granted, even if such change should not be deemed justified, together with the written information by the owner of the distillery, and also the reports made on the occurrence, are to serve as records, and these documents accordingly must always be added to the working plan in question.

5. In case of an interruption of the work in the distilleries subject to control according to section 13 of the law, the provisions under 1 to 3 are to be applied according to their intent. The report on the interruption of the work is to be made without delay to the revenue office. The making of the requisite investigation may be left in general to the collectors or to an inspector by the directive authority.

V. Coincidence of several cases.

In case of coincidence of several of the cases treated of in the preceding provision the various measures must be ordered side by side.

I. Ascertainment of the spirits in the distilleries.

6. To section 11. 1. The amount and strength of the spirits produced in the distillery is ascertained by two revenue officers, one of whom as a rule must be a chief officer. For this purpose the spirits are to be put in barrels. The measurement takes place according to the existing regulations concerning the ascertainment of the alcoholic content and of the amount of spirits for which a revenue drawback is claimed in case of exportation, under the proviso that the further discharge shall be based on the amount in liters of pure alcohol found at the official settlement.

The owner of the *distillery is to keep* ready the barrels

required to receive the spirits. He is bound to provide a suitable locality for the discharge, protected against the influence of the weather, according to instruction of the revenue authorities; he is to supply this room with tools and materials necessary for carrying out the discharge, and to keep the room lighted.

In particular he must provide scales of sufficient capacity besides the requisite gauged weights and instruments for inspection and measurement, which are to be kept under revenue lock.

The place where the scales are to be set up is determined by the chief inspector of the district after giving a hearing to the owner of the distillery.

The owner of the distillery is bound, furthermore, to furnish or cause to be furnished to the inspecting officials such help as is required in order that they may carry out the duties incumbent on them within the prescribed limit. The inspecting officials are also to have placed at their disposal, on demand, a space protected against the weather in which the horses and vehicles of the inspecting officials may be housed during the continuance of the requisite discharges.

2. The measurement of the spirits produced must be made in every distillery, on an average, every eight or ten days. The times fixed for this purpose will be determined on at least a month in advance by the chief inspector of the district after giving a hearing to the owner of the distillery.

The measurement of the spirits produced must also take place whenever additions are made to the duty on consumption, or when they cease or are changed in their amount.

The further discharges of spirits to be undertaken in the distillery as a rule must also take place on those days. The applications requisite for this purpose are to be submitted to the revenue office of the district early enough to enable the office, after examining them, to hand them to the executive officer before he departs for the distillery.

If the owner of the distillery demands the measurement of his spirits or some other discharge on other days, the application may be complied with if a need thereof has been set forth and the requisite official force is on hand. The owner of the distillery is bound, however, to pay the lawful money per day and the traveling expenses of the officers to be sent.

3. The owner of the distillery is to be invited to be present at the discharge in the distillery either in person or by a representative.

The result of the official measurement is to be entered at once upon the termination thereof in an "account book of spirit production" (see Supplement G), which is to be kept in the distillery and to be filled out by the discharging officer, which at the same time is to serve as a check to prevent the annual amount of spirits which the distillery is permitted to produce at the tax rate of 0.50 marks per liter of pure alcohol from being exceeded. If by way

Supplement G.

of exception a part of the spirits produced can not be comprised in the discharge, because, for example, it does not suffice to fill a shipping cask, then the undischarged remainder is to be noted in the account book in its amount as a supplement.

A second copy of the account book is to be kept at the revenue office on the basis of the extract from the account book, which is to be rendered every time by the discharging officer on the result of the official measurement, as well as on the basis of the discharge papers (application for taxation or for storage, shipment certificate), which are to be transmitted to the revenue office.

4. If a measuring apparatus is used in the distillery, the vessels in which the spirits produced are to be kept up to the moment of the official measurement are to be reported once for all to the revenue authorities. They are to be measured officially and to be inventoried.

It is not permitted to keep spirits in other vessels in the distillery and in the rooms immediately adjoining.

The result of the official measurement is to be entered each time also in the counting register (Supplement F) which is to be kept regarding the data measuring apparatus, and is to be compared with the latter; in the case of samplers this is to be done after the sample chest in the measuring apparatus has been emptied and the alcoholic percentage of the content has been ascertained. If in this case or in case the minimum amount of pure alcohol to be drawn has been officially ascertained the amount of alcohol recorded falls short of the amount that ought to be present, by reason of the indication of the measuring apparatus or the official measurement, by larger amount than is to be deducted under ordinary circumstances on account of the evaporation of alcohol, the facts are to be drawn up in protocol and the owner of the distillery is to be heard regarding the reasons.

The proceedings recorded are to be transmitted to the chief office, which is to decide whether the amount of duty on consumption corresponding to the amount of spirits lacking is to be levied. As regards the alcohol which is lost by evaporation under the ordinary circumstances, a deduction is allowable, under reserve of further experience, up to 1 per cent, and in case of low wine distilleries, in which the low wines after passing through the apparatus are worked up into spirits without another measurement for revenue purposes of the finished spirits, by a measuring apparatus or receiver, up to 2 per cent may be deducted from the amount calculated.

Upon application of the owner of the distillery, by way of exception, unless an objection should arise from the standpoint of revenue, the presentation of the spirits for the purpose of ascertaining its quantity and strength may be dispensed with, and the indication of the measuring apparatus may be accepted as the result of the official measurement. Unless in such cases the produced finished spirits are not submitted to further discharge, according to the regulations issued under III, IV, and VII, the owner

of the distillery has to pay the consumption tax on them, besides any addition if any is required.

Concerning the granting of the application, which is subject to repeal at any time, the directive authority is to decide.

5. A deduction from the calculated amount up to 2 per cent may also be allowed in those distilleries in which the low wines or spirits produced are caught in an officially closed receiver, but is subjected to further distillation after the measurement of its alcoholic content without any repetition of the revenue measurement of the finished spirits by measuring apparatus or receiver.

6. If the owner of the distillery neglects to make application in due time (see Ib., sec. 2) for further discharge of the spirits measured in quantity and strength, the conveyance of the spirits into a public or private depository may be carried out officially at the risk and expense of the owner of the distillery, and the spirits may also be placed under official guard up to that moment at the risk and expense of the owner of the distillery.

II. Discharge for free commerce.

1. If the spirits are to be introduced into free commerce the owner of the distillery shall notify the revenue office of the district in due time (see Supplement H), stating the amount and probable strength of the spirits to be delivered into free commerce under the reserve of the final measurement on the occasion of the official discharge, and the revenue office of the district is to enter the application in the consumption tax application register. (See Supplement I.)

Supplement H.

Supplement I.

2. The tax on consumption is calculated at the rate of 0.50 marks per liter until the annual amount of spirits which the owner of the distillery is allowed to produce at that rate shall have been completed, together with any addition to be levied. The discharge, however, is to be effected according to the higher rate of tax in case the owner of the distillery applies for this. A subsequent change of this application is not admissible.

The revenue office, according to this, calculates provisionally what duty is to be paid for the amount of spirits reported, and this amount is noted on the report, together with the rate of duty.

3. The amount of duty calculated, unless the applicant is allowed a respite, is to be deposited at once upon application against receipt (see Supplement K), which is noted by the revenue office on the application.

Supplement K.

4. The application is thereupon transmitted to the executive officers, who perform the measurement of the spirits to be delivered into free commerce, ascertain the duty which is to be paid accordingly, and communicate with the taxpayer.

The result of the discharge, as well as the calculation of the tax, are to be noted on the application, whereupon this application is returned to the revenue office.

5. If a respite is granted the credit acknowledgment has to be transmitted to the revenue office within three days, in default of which the amount of the tax shall be levied by force of law.

6. If the amount of tax assessed exceeds the amount deposited, the difference is to be paid within three days to avoid the collection thereof by force of law.

If the amount of tax assessed falls short of the amount deposited, the excess is to be drawn from the revenue office within eight days against receipt; otherwise, if the amount is more than 20 pfennig, it is sent to the claimant through the mail at his expense.

III. Discharge for storage or for shipment.

1. If spirits are conveyed into a storage room intended to receive spirits, or if they are to be exported or shipped for methylation beyond the revenue district without paying the consumption tax, a notice is to be sent in due time to the revenue office, according to Supplement H, and at the same time a "shipment certificate for spirits exempt from tax" (see Supplement L) is to be applied for.

Supplement L.

2. The applicant, by signing the declaration of acceptance on the shipment certificate, undertakes the duty of transporting the spirits mentioned in the shipment certificate in unchanged form and quantity by the way that may be prescribed, and submit it to inspection and further discharge within the fixed period at the stated office, submitting the shipment certificate; and he also assumes the obligation of becoming responsible for the amount of the duty resting on the spirits, unless by natural agencies or accident a diminution or destruction of the spirits should have taken place during transportation.

The revenue office is authorized to demand adequate security for the fulfillment of this obligation.

If the transportation of the spirits does not take place by railway or water way, the way by which the transportation is to be effected may be prescribed in the shipment certificate, and the time of transportation is to be confined to the time which is indispensably requisite in order to pass over that route.

3. If on exportation to any country outside of the revenue district spirit tax community, or on the reception into a public warehouse intended for untaxed goods, the drawback on the mash-vat or spirit-material tax is claimed (see spirit depository regulation, sec. 2, par. 2), then the application prescribed for this case is to be handed in, together with the application for shipment.

4. The vessels in which spirits are shipped, unless the car is locked or there is official escort, must be so arranged that a safe official lock may be applied.

For the transportation of spirits which are to be exported under claim for drawback of the mash room or material tax the regulations existing for this case are to become operative.

If the spirits during transportation, owing to accident or natural events, require reloading, or if such reloading is to take place for the purpose of the transfer of the vessel executed under package fastening into car fastening, or if the spirits are to be transferred into tank wagons, then the nearest customs or revenue office is to be notified.

The reloading is to be officially inspected after the existing fastenings have been examined and taken off, and the

various vessels have been compared by mark and number with the statements contained in the shipment certificate, and thereupon the packages are to be placed again under lock, and whatever has been done is to be noted in the shipment certificate.

Such reloading is also admissible if the transportation takes place under official escort, or if after reloading it is continued under official escort.

If at the place of reloading there is no customs or revenue office, then the applicant is obliged to pay the lawful daily charges and the traveling expenses of the officials to be sent.

5. Before exportation or before reception into a warehouse, or before the methylation to be undertaken at the place of destination, the spirits are again to be officially measured as regards their quantity and strength. This inspection, however, may be dispensed with in case the transportation has taken place from the beginning under lock or under official escort.

6. The amount of consumption tax on the spirits is to be ascertained according to the provisions under II 2 and 4, and is to be noted in the shipment certificate.

7. In transporting spirits from one warehouse to another the same provisions above noted are to be observed.

IV. Discharge on shipment certificate.

1. If a certain quantity of spirits is to be delivered into free commerce, but if the payment of the consumption tax is not to take place at the revenue office within the district where the discharge into free commerce was issued, but at another revenue office, then a notification is to be handed in in due time according to Supplement H, and at the same time the drawing up of a shipment certificate II, according to Supplement M, is to be requested of the revenue office of the district, and general or special security is to be given for the consumption tax.

Supplement M

2. The ascertained consumption tax has to be paid within the prescribed period under presentation of the shipment certificate at the receiving office, in default of which this duty shall be levied on the maker of shipment certificate.

V. Procedure for shipment certificates I and II.

For the drawing up and discharge of shipment certificates I and II, unless different regulations have been made in the preceding instructions, the provisions regarding the drawing up and discharge of accompanying certificates I and II of the union tariff law of July 1, 1869, and in the invoice regulations issued on the basis of section 58 of that law, are to be applied with the following qualifications:

1. A register, showing the shipment certificates drawn up, is to be kept by the issuing office, according to Appendix N.

Appendix N.

If security for the consumption tax due on the spirits has been called for, the kind and the amount of the security called for is noted in column 9 of the issuing register.

2. The application for the issue of a shipment certificate is to be presented to the revenue office always in duplicate.

In the invoice the time for transportation is to be noted, and also the statement of the shipping route, if requisite. This is to be done by the first issuing officer, who is to

execute the invoice, after inspecting the spirits, in the name of the issuing office by his signature. The duplicate of the invoice is thereupon to be returned to the revenue office, and becomes a document to the register of the invoices drawn up.

3. The results of the inspection are to be entered in columns 15 to 24 of the invoice.

The number of the transporting vessels, their gross weight, and the true alcoholic strength of the spirits, are to be entered in columns 16, 17, and 22 of the invoice, both in figures and in words.

4. Official escorts may in all cases be substituted for the applications of fastenings.

5. On arrival of the spirits the receiving office enters the invoice in a receipt register to be kept according to Appendix O.

Appendix O.

The discharge certificates are to be made out according to Appendix P, and are to be sent to the issuing office after the discharge of the invoice concerned.

Appendix P.

After the discharge certificates have been received at the issuing office, that office has to note in the issuing register the day of receipt, and in so far as the exportation of the spirit, or its reception into a warehouse, or its methylation has been proved to have taken place according to regulations, the sender is to be relieved of the obligation to pay the amount of duty due on the spirits shipped, and any security ordered is to be canceled.

VI. Transfer of responsibility for the consumption tax.

If the spirits are sold before they are discharged into free commerce, for exportation, etc., the responsibility for the consumption tax passes over to the purchaser.

Appendix Q.

The owner of the distillery in such case is to inform the revenue office of the sale according to Appendix Q, but he remains responsible for the duty and obliged to make the requisite applications (see I e) so long as the purchaser of the spirits has not assumed these obligations by making application for further discharge of the spirits.

VII. Methylation.

A similar method is to be observed in further sales of the spirits under revenue control.

Appendix R to R 8.

The granting of freedom from duty of spirits intended for industrial and other purposes shall take place according to the accompanying regulations, together with Schedule S.

VIII. Regulations for spirit warehouse. Appendix S to S 6.

The reception of the spirits into a public warehouse intended for untaxed goods, or arranged exclusively for the reception of spirits with the consent of the revenue authorities, or into a private warehouse, subject to concurrent official fastening, is to be subject to the provisions of the spirit warehouse regulation, together with schedules.

IX. Regulations for spirit refineries. Supplement T to T 3.

The rectification of the spirits under revenue control outside of the storerooms may be permitted according to the accompanying regulations, together with schedules.

Drawback on the consumption tax.

7. To section 12. The drawback on the consumption tax in the exportation of products in the manufacture of which spirits existing in free commerce have been employed, is subject to the appropriate application of the provisions regarding the drawback on the mash room or material tax in exportation.

I. Meaning of fixation.

8. To section 13. The fixation of a distillery, according to section 13, paragraph 1, of the law, takes place in this way: That the amount of alcohol subject to consumption tax or simultaneously to the addition thereto is not ascertained by employing a receiver, measuring apparatus, or sampler, directly, but under reserve of the provisions VI 2 and VII, is calculated from the amount of mash or material which may be transformed into spirits in accordance with the capacity of the distilling apparatus employed during the declared time of operation.

II. Distilleries subject to fixation.

So far as the directive authorities do not deem the application of the ordinances given in section 5, etc., of the law to be requisite, the following classes of distilleries are subject to fixation independent of the application of their owners:

1. Those distilleries using farinaceous material which use a distilling apparatus with direct fire, and which do not fill with mash more than 1,500 hectoliters of vat space during one operating year, that is to say, from the 1st of July one year to the 30th of June of the next.

The "direct" fire implies that no steam shall be conducted into the distilling boiler, but on the contrary that the boiler shall be heated by direct fire. The owners of distilleries are allowed, however, to fix water, steam, or sand baths to the distilling boilers in order to prevent the scorching of the mash.

Upon the order of the directive authorities distilleries with steam apparatus may also be subjected to fixation; but distilleries with continuous columnar apparatus are absolutely excluded from fixation.

In case the future extent of operation of a distillery seems doubtful, it may be subjected to fixation in case the average annual amount of mash-vat tax ascertained on the basis of the provisions in section 2 of the law corresponds to an annual working capacity of not more than 1,500 hectoliters of vat space.

2. Those distilleries which use only the leavings of their own beer production or solely nonfarinaceous matter (with the exception of molasses, beets, or beet juice).

The extent of operations does not exclude from fixation; on the other hand, those distilleries which are provided with continuous columnar apparatus are to be treated according to the provisions of section 5, etc., of the law. This is also to be done in regard to all distilleries working with molasses, beets, or beet juice, and this without regard to their extent and mode of operation.

III. Fixation of the distilleries of the kind described under 2.

1. In regard to the necessary time for cleansing of apparatus, to disturbance at night, and other impediments in the operation, it is ordained that there shall be allowed—

(1) For every full day only twenty-one operating hours.

(2) For every full week only six times twenty-one operating hours.

(3) For every full calendar month only twenty-four times twenty-one operating hours.

The calculation of time according to figures 2 and 3 presupposes that these periods are not interrupted by intervening days when no work is done.

2. (1) In order to calculate the duty at any time it is necessary to know—

(*a*) What is the capacity of the distilling boiler.

(*b*) Up to what fraction of its cubical capacity this boiler may be filled with mash for each distillation.

(*c*) How much time is required for each distillation.

(*d*) How long the distilling boiler is to remain in operation.

(*e*) What average output of alcohol the distillery produces from one hectoliter of mash.

(2) Till further information it is to be assumed that in distilling apparatus of simple construction, with boiler, helmet, and cooling tube (without apparatus for previous heating of the mash), the distilling of one filling of the boiler, without regard to its size, requires on an average four hours, so that a boiler on an average can be filled only up to five-sixths of its capacity, and that four distillations produce so much low wine as is required to fill the same boiler with low wine, which thereupon in its turn may be distilled in six hours, normal conditions of distillation.

(3) If it is furthermore known what is the capacity of the distilling boiler, which appears from the inventory of the distillery, and how long a time mash is to be distilled, which is to be declared by the owner of the distillery in his application for the distillation, it may be calculated what amount of mash is to be distilled within the declared distillation time (fixation period, see V 3) with the distilling apparatus in question. It is to be ascertained—

(*a*) How many times the boiler may be filled during the declared distilling time on the basis of the normal distillation time; and,

(*b*) What amount of mash expressed in liters may be introduced into the boiler, the capacity of which is known in every normal filling thereof by means of the number of boiler fillings to be fixed under letter (*a*).

(4) The number thus found represents the working capacity of the distilling apparatus for the declared distilling time; that is to say, it shows the amount of mash that can be distilled during that time by means of the distilling apparatus in question.

(5) The assessing of the consumption tax to be paid takes place thereupon, in advance, by the revenue office in such way that the amount of mash calculated according to the above is multiplied by the average percentage of output of the distillery in question.

(6) In order to enable the revenue office to make this calculation, the inspecting officers, in particular the chief inspector of the district, must accurately ascertain the conditions of output of every distillery here to be considered, and communicate the result to the revenue office, which is to keep a continuous record. This information is to be obtained from time to time, according to the judgment of the chief inspector, but especially at the beginning of a new operating year. For that matter, in ascertaining the percentage of output it is also permitted to use the data which are to be taken from the register to be kept by the owner

of the distillery regarding the crude and fine distilleries that have taken place. (See below, V.)

(7) The consumption tax assessed in a single case is to be stated to the owner of the distillery; any objections made by him are subject to the chief office concerned. The raising of objections shall not be followed by interruption of the work.

3. From the preceding it results that, without interfering with the provisions under 7, in the fixation of the mash distilleries in regard to the calculation of the consumption tax, neither the mash space nor the free space is taken into consideration; on the contrary, it is quite immaterial what space the distiller may fill with mash daily and what space he leaves empty, and what quantity of mash he really distills—supposing, of course, that he observes the operating limit of 1,500 or 3,000 hectoliters of vat space per year.

On the other hand, the declared distilling time must not be exceeded, and during its continuance no other distilling apparatus than the one declared shall be used, and the condition of that apparatus existing at the moment of submission of the fixation plan (see below, V 1) must not be changed; and distilleries using pressed yeast must not stop or materially diminish the preparation of yeast during the continuance of fixation.

4. In distilling apparatus of simple construction the first operation results only in so-called low wines, that is to say, weak spirits (raw distillation) which can not by itself be used, and therefore must be redistilled for feints (fine distillation). The latter is often done in the same boiler in which the mash was distilled. The distillation of the low wine—the feints distillation—is not subject to duty, provided no mash is mixed with the low wine, because the calculation of the consumption tax, according to what has been said above, is always based on the output of pure alcohol and not on the output of low wines.

The calculation of the amount of duty is illustrated by the following example, in which a distilling apparatus of simple construction is assumed, without apparatus for previous heating, and without untaxed low wine distillation: On seven different days in one month mash is to be distilled every twelve hours, and the low wines thence drawn are to be redistilled. The boiler has a capacity of 450 liters. These seven days of twelve operating hours each give eighty-four operating hours to be calculated, of which the distillation of mash requires sixty-four hours and the untaxed distillation of low wines the remaining hours. According to this, there result sixteen mash distillations of 375 liters each—that is to say, a quantity of mash of 6,000 liters—and with an output percentage of 8 per cent there results 480 liters of pure alcohol, for which the consumption tax, according to the lower assessment, is 240 marks; according to the higher assessment, 336 marks. The calculation for the time for the untaxed distillation of low wines is here as follows: Four mash distillations give so much low wine as is necessary to distill a filling of the same boiler, and for each distillation of low wine six hours are required. Accordingly,

for every sixteen hours of mash distillation time there are six hours of low wine distillation time, and for sixty-four hours of mash distillation time there are twenty-four hours of low wine distillation time. As in this example four full mash distillations precede the last low wine distillation (compare the following paragraph), it is proper to assume twenty-four hours instead of twenty hours for the low wine distillation—that is to say, that on the last operating day the distillation may be carried on for sixteen hours instead of twelve hours. In such cases an appropriate remark is to be entered on page 2, last column, of the fixation plan.

The time required for a low wine distillation can be deducted in advance from the total figure of the operating hours only in so far as it shall be preceded by so many mash distillations as are required for one filling of the boiler with low wine. For any excess of mash distillation no untaxed time must be noted for low wine distillation; by way of exception, however, the respective chief office may allow the distillation of any remaining low wine immediately after the termination of the operation applied for, in unobjectionable cases, without tax, upon special request. The authorization is to be added to the fixation plan in question.

5. In the manner of operations just mentioned the low wine distillation takes place within the fixation period applied for. It is also permitted, however, to distill the low wine without tax outside of the fixation periods.

In the latter case the following provisions are to hold good:

(1) The distillation of the low wine must begin only on the day after each last mash distillation. The untaxed low wine distillation, however, may take place after the expiration of a single fixation period or of several fixation periods, or of the entire time for the distillation of material; the number of distillations of material that have taken place is not to be considered here.

(2) Within the fixation periods applied for none but mash distillations must take place, and in these cases no deduction is made for untaxed low wine distillation time. On the other hand, of course, no mash may be distilled by itself or as an addition to low wine outside of the fixation period.

(3) In the fixation plan it is to be stated on what days and at what time during the days (whether forenoon or afternoon), and how many hours of the day the low wines are to be distilled.

(4) The calculation of the tax is to take place in the manner prescribed above under 4; in so doing, however, the low wine distillation times are to be left out of consideration in all cases, and especially when more hours are spent in low wine distillation than is provided according to the normal distillation time, or when low wine is distilled, although, according to the normal conditions of distillation, no untaxed low wine distillation time would be comprised within the taxed distillation time.

(5) A distiller who abuses these privileges may be excluded from them thereafter by the chief office concerned, apart from any penalty *to which he may* have become liable,

If the low wine distillation is to be done with a special boiler, the time of use of that boiler is to be specially declared in submitting the fixation plan, and during the continuance of the mash distillations the cooling tube belonging to the second boiler is to be placed under the prescribed seal; in unobjectionable cases, however, the chief office may authorize the simultaneous distillation of mash and low wine.

If mash is to be added to the low wine, then no untaxed distilling time can be granted for such low wine distillation, but on the contrary, under reserve of the provisions under 1 the full declared distillation time is to be calcualted for the fixation sum, because the mixture consisting of mash and low wine is to be regarded as entirely equal to the unmixed mash so far as the tax is concerned.

6. If the distilling apparatus, as is the case, for example, in the Pistorius and many other apparatuses, is provided with a previous heater or mash heater, it is to be noted that in these vessels the mash, before it enters into the distilling boiler proper, is heated considerably, and thus is prepared for the distillation that is to ensue. For the distillation of one boiler filling in such distilling apparatuses not four but only three hours are required. Corresponding to this change in the normal condition of distillation a change is also made in the calculation of the consumption tax. Let, for example, the capacity of the boiler be 270 liters and the operation be declared for twenty-four hours. The distillation for the boiler occupies three hours, and thus the boiler may be distilled eight times within twenty-four hours; each filling for these eight distillations will amount to five-sixths of 270, or equal to 225 liters. Thus, with this boiler, within the declared distillation time 1,800 liters of mash may be distilled, for which, with an alcoholic output of 6 per cent, a dutiable amount of 108 liters of pure alcohol, and a consumption tax of 54 marks, or respectively 75 marks and 60 pfennig, is calculated.

In distilling apparatus having two or more parts (boiler, previous heater, etc.), in the calculation of the tax only the so-called first boiler in which the distillation proper takes place is to be considered.

The feints distillation (low wine distillation) as a rule does not occur in the Pistorius and similar distilling apparatus, because, in consequence of the arrangement of these apparatuses, the spirits attain their necessary strength at the first distillation. If, however, low wine distillation should nevertheless be necessary, the provisions under 4 or 5 find suitable application.

7. In distilleries with steam apparatus (II 1, paragraphs 3 and 4) the normal distilling conditions to be assumed, till further information, are that the distilling boiler proper may be filled up to two-thirds of its full capacity, and and that the contents of the boiler may be distilled in two hours. For the rest the above provisions, especially those regarding the conditions of distillation, are to be uniformly applied to such distilleries, and the consumption tax is to be fixed in the same way as in other fixation distilleries, on the basis of the amount of mash calculated according to the

capacity of the distilling apparatus within the declared distilling time, and according to the average output of the distillery. In such works, however, it is to be further ascertained what quantity of alcohol results from the amount of mash reported in the fixation plan and from the average output of the distillery in question. If the quantity of alcohol ascertained according to the latter mode of calculation is greater than that ascertained according to the former mode, then the tax to be levied shall be that calculated from the amount of mash reported.

8. In the calculation of the number of mash distillations from the number of hours of work one hour of excess remains without consideration, while several hours of excess are to be accounted as a full mash distillation.

9. The productive capacity of the distilling apparatus is not to be ascertained for each single case by special examinations, but is to be solely estimated according to the preceding rules.

If, however, a distiller in submitting the fixation plan affirms that he suffers considerable injury through the application of these principals to his distilling operations, because his distilling boiler can only be filled to less than five-sixths or two-thirds of its full capacity, or because a distillation requires more than four, or three, or two hours, then the productive capacity of the distilling apparatus may be specially ascertained by the chief office concerned on the basis of the result of sample distillations. In regard to this the following has to be noted:

(1) Special examination for the distillation times are to be made only if according to the observation of the inspectors there is a reasonable conjecture that the application of the normal distillation time would work considerable injury to the distiller.

Such special examinations must never be made on account of inferior management (for example, on account of insufficient fire or insufficient inspection of the distilling apparatus, or on account of neglect to renew the cooling water, etc.), but only on account of defective condition of the distilling apparatus (for example, owing to the presence of the so-called tapping tube, that is to say, a straight cooling tube, not angular or spiral) or in case of a more than transient lack of cooling water.

(2) The fixation of any departures in the times of distillation for various distilleries is effected by the principal office concerned; this office, however, has the right to decline applications for special fixation of the times of distillation, without undertaking sample distillations, when it is officially known that these applications are occasioned not by the defects mentioned under (1), but by bad management.

(3) In undertaking sample distillations the utmost caution is to be used, and it is especially to be insisted that not only shall the firing be kept up in sufficient amount and uninterruptedly, but also that the water in the cooler shall be renewed as often as appears necessary to effect the condensation of the alcoholic vapors as rapidly as possible.

In the several sample distillations the time required for the filling and emptying of the distilling apparatus is not to be included in the time of distillation, but the beginning of operation, in case of such distillation, is reckoned from the moment the fire is lighted or the steam is let into the distilling boiler. If, however, several sample distillations take place without interruption, then the time falling between the various distillations and required for filling and emptying the distilling apparatus is to be entered as distilling time. The distillation is to be considered finished when a small sample of the distilled spirits flowing from the cooling tube when placed upon the hot boiler helmet and evaporated gives no bluish flame when touched with a light.

(4) Special fixations for the periods of distillation may be arranged in case of the existence of the conditions described under (1), for the crude distillation and for the fine distillation, or even for one of these distillations only. Under all circumstances, however, these periods are to be expressed in full hours (for example, five or six hours); the fractions of hours occurring in sample distillations are to be rounded off in such manner that the time less than half an hour is to be omitted, whereas the time of half an hour and above is estimated as a whole hour in favor of the person concerned.

(5) In order to ascertain the productive capacity of a distilling apparatus at least five sample distillations are to be made, and the average productive capacity thus ascertained may be used as the basis for the calculation of the tax instead of the normal conditions of distillations only when the difference is more than half a hour.

If, according to the preceding remarks, the producing capacity of a distilling apparatus has been specially ascertained, reference has to be made in the column of remarks of the fixation plan to the respective order from the chief office, which also is to be noted in the inventory of the distillery, and a copy of this order is to be added to the fixation plan, in which, for the first time, the specially ascertained conditions of distillation have been employed.

10. The directive authority is empowered whenever the evident requirements of a distillery or the revenue interest demand it to establish other conditions than those corresponding to the conditions of normal distillation.

IV. Fixation of distilleries of the kind described under II 2.

The provisions under III 1, 2 (1), (3) to (5), and (7), 4, 5, 6, 8, 9, and 10 are applied to the distilleries in question under the following provisions:

1. Till further information the normal conditions of distillation are to be regarded as follows:

(1) That for the purpose of one distillation the distilling boilers may be filled—

(*a*) With pressed wine lees only up to one-third.

(*b*) With liquid wine lees or pounded grape hulls only up to one-half.

(*c*) With seed fruit or pounded parings of seed fruit only up to two-thirds.

(*d*) With stone fruit, berries, grapes, gentian, or other roots only up to three-fourths of the total capacity.

(2) That in the case of distillation—

(*a*) Of gentian or other roots, three hours are necessary.

(*b*) Of liquid or pressed wine lees, six hours.

(*c*) Of the other material mentioned under (1), four hours.

(*d*) Of low wine, even with very inferior arrangement of the distilling apparatus, at most six hours are necessary.

(3) That for the production of the quantity of low wine constituting one filling of the boiler—

(*a*) Six distillations shall be necessary for pounded grape hulls or seed fruit or waste of seed fruit.

(*b*) Five distillations for the other material mentioned under (1).

2. In regard to the conditions of output it may be assumed, until further information, that the average output per hectoliter from the following materials is as follows:

	Liters of absolute alcohol.
Cherries, prunes, and plums	4.5
Wine, and liquid wine lees	4.5
Gentian and other roots	2.5
Pressed wine lees	2.5
Brewers' offal and yeast broth	2.0
Stale beer	3.0
Pounded grape hulls	2.0
Seed fruit	2.2
Waste of seed fruit	1.5
Berries	2.5

If other material than that mentioned above is used, the directive authorities are to ascertain the average alcoholic output on the basis of sample distillation.

3. If several distilling apparatuses are to be simultaneously employed in distilling material, this is to be specially noted in the fixation plan, and then the calculation of the tax is made separately for each distilling apparatus.

4. The conditions of normal distillation given under 1 are applied only in apparatus of simple construction (consisting of boiler, helmet, and cooling tube), with direct fire, and with bipartite distilling apparatus furnished with a device for previous heating, and having direct fire; in the latter case, however, with the limitation that the normal distillation periods are to be shortened by one hour each.

In all other kinds of apparatus and in working up any other than the material mentioned under the (1), the productive capacity is to be ascertained in each particular case on the basis of sample distillations according to the provisions under III 9. When such measurement has already taken place under past legislation it need not be renewed.

V. Regulations for distilleries subject to fixation. Appendix U.

1. The owners of distilleries subject to fixation have to make written notice to the revenue office of the district according to the fixation plan (Appendix U) the operation at least three days for the first filling with mash or the first day of distillation; the drawing up of a plan of operation is not required.

2. The fixation plan is to be submitted in duplicate, and serves at the same time to calculate the consumption tax as well as the mash vat or material tax, according to section 41, IV of the law, or of the addition to the consumption tax, according to section 42 of the law.

The revenue office is to fill out the second and third pages of the fixation plan according to the model entries, and especially to enter in the appropriate column the amount the consumption tax and mash vat and material tax calculated.

The fixation plan is to be dealt with in the same manner as the operation plan.

3. The operation may be declared for optional periods of time (fixation periods); each fixation period, however, must comprise at least the time required for a single distillation of material according to the condition of normal distillation (see III 2 (2), 6, first paragraph, and 6 and IV 2 (2)), or according to the conditions of distillation specially ascertained—for example, in the case of distillation of potato mash on a distillation burner without a device for previous heating, four hours.

One fixation plan may be used to declare the operations for several fixation periods, and various kinds of farinaceous and nonfarinaceous material to be used; within the same fixation period, however, only one material of one rate of taxation may be worked up.

In working up mixtures of materials subject to different rates of material tax, the calculation of the tax is to be based on the relatively highest rate of tax. If the materials forming the mixture are subject to the same rate of tax, then the calculation is to be based on the conditions of distillation and production which are most favorable to the revenue interest.

Several fixation plans may be issued within one calendar month.

The extensions mentioned under III 1 are to be granted only for periods of fixation amounting to at least one full uninterrupted day or for one uninterrupted full week, etc., each time, so that, for example, in a fixation period of twelve hours these twelve hours in the calculation of the consumption tax are entered entire, whereas in a fixation period of twenty-four or thirty-six hours only twenty-one or thirty-three hours, and in a fixation of forty-eight or sixty hours only forty-two or fifty-four hours are entered.

4. Distillers using farinaceous material have to mention in each special fixation plan the number and the total capacity of the vats whose contents are to be distilled on the basis of the fixation plan submitted.

The contents of the vats stated are always to be distilled entirely; no remainder of mash must be left for distillation on the basis of a subsequent fixation plan.

The revenue office must carry continuous records for each such distillation on the basis of the respective statements in the fixation plans, which shall show the vat space filled with mash in every operating year.

If in any distillery in the course of an operating year the admissible maximum amount of vat space is exceeded, then that distillery from the moment of transgression to the close of the respective operating year is no longer subject to fixation, but to the provisions of section 5, etc., of the law, and the respective main office is to take the appropriate measures if necessary under application of section 8 of the law.

The directive authority may order even upon one transgression of the admissible maximum amount that the distillery shall be excluded from fixation for a fixed number of years, or permanently.

5. The distiller has to keep a distilling register in quarterly sections concerning the raw and fine distillations that have taken place. (See Appendix V.) Appendix V.

In this register there must be entered for each single boiler filling the day when the distilling boiler was used; the kind and amount of material used (for example, potato mash, low wine, etc.); the time of beginning and the time of ending of distillation accurately in hours and minutes; the amount (not alcoholic strength) of the low wine or spirits obtained—and this at the beginning or immediately after the ending of the distillation of each boiler-filling—irrespective of the question whether the product of distillation is crude or fine (material mash or low wine distillation). The time of distillation in the sense of this provision begins at the first distillation with the moment of lighting the fire or allowing the steam to enter into the distilling boiler, and in the distillations immediately following with the filling of the boiler.

The entries in the distillery register are to be made by the distiller himself, or at his responsibility by a member of his family, or by an official of the distillery.

The register is to be transmitted by the revenue office to the distiller and to be returned by him to the revenue office within at least three days after the expiration of each quarter; for the rest the distillery register is to be dealt with in the same manner as the operating plan, and it forms a document to the application register.

6. If during a fixation period a change is made in the capacity of the distilling boiler, the operation must not be continued on the basis of the previous fixation plan, but a new fixation plan must first be submitted.

7. The distiller may take back the fixation plans before the operation begins without paying a duty, provided he sends notice of this in due time to the revenue office, transmitting the fixation plan and giving a reason which is recognized as valid by the revenue office. The reason for taking back the fixation plan, which forms a document to the application register, is to be briefly noted on this plan by the revenue office, and this remark is to be acknowledged by the distiller by his signature.

If after the beginning of the operation an interruption occurs, or if the material declared can not be distilled at all or only in part, without any fault of the distiller, a corresponding reduction of the consumption tax previously fixed may be granted by the main office upon application.

8. Distillers who prepare pressed yeast must state this in the fixation plan. If during the continuance of the fixation period the preparation of pressed yeast is stopped, the operation must not be continued on the basis of the previous fixation plan, but a new fixation plan must be submitted. Upon special demand by the main office the distiller is required to keep an exact record regarding the extent of the preparation of *pressed yeast*, and to submit

it for inspection at any time to the chief officer of the revenue administration.

VI. Treatment of smaller distilleries subject to fixation.

1. For those distilleries which possess a distilling apparatus of simple construction (boiler with or without previous heater, helmet, and cooler) and with direct fire, with a single distilling boiler of a capacity of not more than 200 liters, the state government may order that the regulations under 3 to 5, unless ordered otherwise hereafter, shall not find application, but on the contrary the following regulations are to hold good.

In the event of the existence of the other suppositions, the same is to hold good of the distilleries which use exclusively grape hulls or wine lees, and which use a distilling apparatus of not more than 300 liters capacity.

(1) If the distiller has two or more distilling boilers, then the boilers not intended for distillation, together with helmet and cooling tubes, are to be kept under permanent official lock. The distillation of the low wines can only take place in the same boiler that is used for raw distillation.

(2) The distillers are free to choose the time at which they wish to distill, as well as the duration of the distillation, so that they will be entirely unrestricted in their operations, and in particular need not keep or declare any fixation period. (See V 3.)

(3) The distillers must notify the revenue office of their district of their operation, in writing or orally, at least three days before the beginning of the operation (the first filling of mash or the first day of distillation). This notification need not take place more than once for each full calendar quarter, and may take place within the quarter for the rest of the same at any time. It is also admissible, however, to submit several notifications for shorter periods of time at the revenue office in the course of the operating quarter. If the distiller submits the notification in writing, he has to use for this purpose the fixation application according to Appendix W. If the notification is made orally, the revenue office is to fill out this form according to the statements of the distiller and have him sign it.

Appendix W.

The notification for fixation is in both cases to be drawn up in duplicate; it is to show the distilling apparatus to be employed, the kind and amount of material to be used within the operating period, as well as the months and days during which he intends to operate. In the case of farinaceous materials the application is to show, besides these statements, the total amount of mash to be distilled within the operating period, which is to be ascertained by calculating for 50 kilograms of potatoes, 66 liters of mash, and for 50 kilograms of grain, 200 liters of mash; if necessary, it is also to be stated that the operation involves the preparation of pressed yeast.

(4) The statements made by the distiller in the application for fixation, regarding the kind and amount of the material to be distilled, may be examined as to their correctness. The result of this revision is to be officially certified on both copies of the application. Departures from the statements of the application for fixation up to 10 per cent are free from penalty. In the calculation on the

consumption tax, however, all the departures must be considered; for this purpose the inspecting official in a given case must undertake an appropriate correction of the application.

(5) If an official inspection has taken place, the inspecting official must in proper time return to the revenue office the officially certified applications for fixation.

In all cases the revenue office has to fix the consumption tax before the beginning of operations, to enter the same upon both copies of the application, to notify the distiller of the amount of the tax, and to make him acknowledge the corresponding entry by his signature. For the rest the two copies of the application are to be dealt with in the same way as the plan of operation.

(6) The distillers have to keep the distillery register prescribed under V 5 concerning the crude and fine distillation that have taken place and are subject to the regulation there prescribed.

(7) For the calculation for the consumption tax the provisions under III 2, 9, and 10, as well as IV 1, 2, and 4, and, finally, the ordinance previously given under III in the closing sentence, find appropriate application.

The revenue office has to enter the amount of tax calculated according to the preceding regulation in the application for fixation, and to cause the respective remark to be signed by the distiller.

At the close of the operating quarter the consumption tax is calculated once more on the basis of the entries of the distillery register, in this way, that for each single kind of material the number of hours during which the distillation of mash material took place is ascertained, and from the total number of hours the amount of mash or material is calculated which could be distilled within that total number of hours, according to the productive capacity of the distilling apparatus in question. From the amount of mash or material ascertained in this manner the consumption tax is thereupon calculated by applying the average percentage of alcohol output.

If in this subsequent calculation it appears a sum is arrived at exceeding by more than 5 per cent the amount of the consumption tax previously fixed for the respective operative quarter on the basis of the application for fixation, the distiller is obliged to pay the additional amount subsequently.

(8) In calculating the number of operating hours of distillation of material, one hour of excess is not considered, whereas several hours of operation in excess are to be regarded as a full distillation of material.

In regard to this it is to be further noted that here the total number of the hours of distillation of material, aside from the exception just mentioned, must always be entered full in the calculation of the tax, and that therefore the provisions under III 1, regarding the calculation of the operating day with only twenty-one hours, etc., shall not find application to the distilleries that are to be treated according to the present regulation.

The time specially entered *in the distillery* register for

the low wine distillation (fine distillation), which in this case also is untaxed provided that no dutiable material is added to the low wine, is not to be considered at all in calculating the tax, and hence must not be deducted from the time of distillation of material. If low wine is distilled mixed, this mixture is always to be regarded as dutiable material, and for such mixtures no other conditions of distillation must be noted than for the material in question.

The calculation of the amount of duty is elucidated by the following example:

The capacity of the distilling boiler is 86 liters, and, according to columns 3, 5 and 6 of the distillery register, "cherries" were distilled during fifty-seven hours. According to the provision under IV 1 the distilling boiler in employing stone fruit may be filled to three-fourths of its capacity and may be distilled within four hours of a boiler filling; accordingly fifty-seven operating hours gives fourteen distillations of material ($4 \times 14 = 56$; and an operating hour in excess is left out of considertion), each with 64.5 liters (three-fourths of 86) of material, that is to say, on the whole, 9 hectoliters and 3 liters of material (14×64.5), for which, with an average alcoholic output of 4.5, there results an amount of 40.63 liters of pure alcohol, and accordingly a consumption duty of 20 marks and 30 pfennigs or 28 marks and 40 pfennigs.

(9) The provisions under V 7 and 8 find appropriate application.

2. For distilleries which use only a single distilling apparatus, and do not produce in one operating year more than 50 liters of pure alcohol, the government of the country may order that the provision under III to V shall not find application, but that on the contrary the consumption tax is to be fixed without regard to the producing capacity of the distilling apparatus, according to the alcoholic output, to be calculated from the declared or officially ascertained amount of material in the application for fixation (Pauschalirung), and the following regulations are to hold good:

(1) The distiller must pledge himself in the first application for fixation for every operating year that he will not produce more than 50 liters of pure alcohol within that operating year. The observance of this obligation is to be subject to the supervision of the revenue office; the data for this purpose are furnished by the quantity of alcohol calculated on the basis of the application for fixation for the purpose of ascertaining the amount of consumption tax; if necessary the revenue office must keep continuous records on this matter, divided into operating years. If the distiller in the course of an operating year exceeds the admissible maximum amount of 50 liters of pure alcohol, then his distillery, from the moment of transgression to the close of the operating year, is no longer subject to [1]Pauschalirung. In such cases the main office has to take the appropriate measures, and the directive authority may order even upon one transgression of the admissible maximum amount

[1] Fixation.

that the distillery shall be excluded from [1]Pauschalirung for a certain number of years, or permanently.

(2) The provisions given above under 1 (1) to (5) and (7), first and second paragraphs, as well as under V 7, are applied to the distilleries in question. On the other hand, the distiller is relieved of the obligation to keep the distillery register.

VII. Provisional regulations for distilleries for farinaceous materials.

1. During the operating years 1887–88 and 1888–89 the directive authorities may also subject to fixation such distilleries using farinaceous materials as fill with mash within one operating year over 1,500 but not more than 3,000 hectoliters of vat space, in accordance with the provisions under II 1.

Upon application of the distiller the main office in question may fix in advance and with binding force instead of the amount of tax the minimum quantity of pure alcohol to be drawn. In this case the further discharge of spirits is subject to an appropriate application of the executive regulation to section 11 of the law.

2. If other distilleries are unable in the operating year 1887–88 to comply with the regulation prescribed in sections 5 to 7 of the law, they may also be subjected to fixation by the directive authority for the period referred to.

3. All distilleries that use farinaceous materials, if they fulfill the other prerequisites mentioned under II 1 or above under 1 or 2, may, without regard to their distilling apparatus, be subjected for the present on the basis of their declared mash space and for the output for each distillery, to the following regulation of fixation regarding the duty:

(1) The distiller must every month submit an operating plan, and declare in it what quantity and what kind of material is to be employed for every mash vat, and what quantity of pure alcohol he intends to draw from the mash space stated. In the case of agricultural distilleries that operating plan is to serve at the same time to fix the mash-vat tax. During the time for which the operating plan holds good the same kind of material and the same quantity must always be used for a stated vat space. It must further be stated whether, how often, and from what vat any pressed yeast is to be obtained.

(2) For every distillery the average output ascertained by watching sample distilleries, and if the work goes on either with or without the preparation of pressed yeast then it must be ascertained for each of the methods; the result of the ascertainment is communicated to the revenue officer, which has to keep continuous records on this subject.

(3) On the basis of the declaration of the distiller the main office fixes the amount of duty. The amount thereof may be fixed higher if on the basis of the average ascertained output there results a higher output of alcohol than on the basis of the declaration.

(4) Upon the demand of the main office the distiller is to keep an accurate record of the quantity of spirits obtained, and, if the case requires, also of the pressed yeast

[1] Fixation.

obtained and the disposal thereof, and to submit that record at any time to the inspection of the chief officer of the revenue of the administration.

I. Provision for control from the law of the 8th of July, 1868.

9. To section 41. The provisions of control prescribed in the law regarding the tax on spirits, etc., of July 8, 1868, applies to all distilleries, together with sections 42, IV, and 43 of the present law, and in the executive regulation issued in addition thereto unless other provisions hold good on the basis of sections 40, 48, and 49 of the present law.

II. Fixation for mash vats and material tax.

1. It shall be lawful to subject to fixation regarding the mash-vat or material tax those distilleries which were subjected to fixation regarding the consumption tax according to executive regulation under III to VI to section 13 of the law so far as they do not pay instead of the mash-vat or material tax, the addition to be treated on the same basis as the consumption tax in virtue of their being industrial distilleries or upon their application.

2. In the fixation of the above-named distilleries regarding the mash-vat or the material tax, the principles established in the executive regulation to section 13 under III to VI find uniform application.

The calculation of the mash-vat or material tax to be paid is made according to the tax rate in section 41, II and III of the law. (See executive regulations to section 13.)

In the fixation of agricultural distilleries the tax rate fixed in section 41 for the capacity of the mash vats are to be applied to the amount of mash calculated, so that for every hectoliter of mash the rate of respectively 78.6 pfennigs, 1 mark and 4.8 pfennigs, 1 mark and 17.9 pfennigs, 1 mark and 31 pfennigs shall be assumed, according as the distillery by reason of its average daily mash filling is subject to one or the other of these rates of taxation.

III. Exclusion of fixation.

In case of distilleries using farinaceous materials which are subject to fixation regarding the consumption tax according to the executive regulation under VII to section 13 of the law, the mash-vat tax is not levied by way of fixation.

Ground plan and drawing of the distilling apparatus.

10. To section 43. In the ground plan to be submitted by the distiller in duplicate the distilling apparatus and the course of the tubing running from the distilling apparatus to the receivers, or to the measuring apparatus, or carrying off the residue low wine, are to be drawn.

Together with the report of apparatus, an accurate drawing of the system of the distilling utensils and all the tubing is to be submitted in duplicate.

Supplemental tax.

Appendix X to X 3.

11. To section 46. The calculation and levying of the supplemental tax is subject to the provisions of the regulation of supplemental spirit tax, which are given herewith, together with samples.

APPENDIX B.

[Transacted at ——, September 25, 1887.]

In the distillery of Mr. ———, at this place, the following facts were ascertained in regard to the provisions made for securing the consumption tax on spirits:

The distilling apparatus used in the distillery, standing free and accessible on all sides, is a tripartite Pistorius, with vessels standing side by side in a rising direction. The alcoholic vapors are first rectified in the low wine chamber found in the previous heating device, then they pass through two basins, and thereupon are carried through the wall to the wooden cooler outside of the distillery for condensation. The worm in the cooler is connected at the lower edge of the cooler with the tubing which carries the spirituous liquor obtained farther on. From the cooler the tubing again runs through the wall to the interior of the distilling room, and there turning to the right describes an arc and discharges into the antechamber, being everywhere 5 centimeters distant from the wall. The following precautions have been taken in regard to this:

1. The cleaning of the low wine chest is effected through an opening closed with a disk; the flanges of this disk have received three lead seals.
2. The stopcock of the low wine tube leading from the low wine space to the second boiler has received a fastening with two leads applied to it above [below].[1]
3. The low wine tube contains two flanges, each of which has been closed with two leads.
4. The cooler has been raised 30 centimeters above its former pedestal of masonry, so that its bottom can be controlled.
5. The tubing issuing from the cooler has a flange between the cooler and the wall, which has been closed with two leads.
6. In order to be able to inspect the tubing leading to the interior of the distilling room, an opening 15 centimeters in extent has been made through the wall inclosing the tubing and closed with a pane of glass.
7. Within the distilling room the tubing, before reaching the antechamber, has four more flanges, each of which has been closed with two leads.
8. From the antechamber the tubing for the alcohol obtained runs at a distance of 5 centimeters from the wall, and at a height of 50 centimeters above the floor, near the yeast chamber, through the floor to the spirit cellar into two receivers, each of 5,000 liters capacity. On this course the tubing has eight more flanges, each of which is closed with two leads, while at the place where it passes through the floor there is an opening of 15 centimeters to be closed with a pane of glass.

[1] If there is a separator, then both the openings for cleaning and the tube leading to the boiler are closed in the same way.

The tubing throughout its length from its point of entrance into the cooler up to the antechamber or the receiver, the low wine tube, and the outer wall of the low wine chamber have been accurately inspected; they are in the condition prescribed, and no opening has anywhere been found that could permit the removal of spirituous liquor or the attachment of a branch tube.

The cellar in which the receivers stand has only one entrance from the yard. The door admits of being closed securely; besides the closure (lock) belonging to the owner of the distillery it has received a special revenue closure (lock) by means of a patent lock on an iron bar. The two windows of the cellar are provided with secure iron trellis well fixed in the wall.

The receivers are arranged in a manner admitting of closure (locking) at the spigot, the manhole, the air dome, the gauge (stand glass), and the scale, and at these parts they have been provided with leads.

The owner of the distillery and the manager thereof were notified to take care that the above-named parts of the tubing shall always be kept bright and shining, and to give official information of any injury to the distilling apparatus or to the official closures (locks) according to section 10 of the spirit-tax law of June 24, 1887, within the prescribed period of, at most, twenty-four hours.

At the same time they have declared that they have no objection to the closures (locks) applied.

Read ———. Approved ———.

———— ————,
Owner of the distillery.

———— ————,
Manager of the distillery.

Transacted as above.

———— ————,
———— ————.

Appendix E 1.

[District of the revenue-collecting office at ———. Number —— of the inventory. Number —— of register of application for operation. Number —— of the revenue-collecting register. Month of ———, 18—.]

Operating plan of the distillery of ———, at ———, in ——— street, at number ———, and ——— kilometers from the revenue-collecting office.

INSTRUCTIONS FOR THE OWNERS OF DISTILLERIES.

1. Only the forms furnished by the revenue-collecting office may be used for the operating plan.

2. The operating plan must as a rule be drawn up for a full calendar month, or, if the operation is to begin only in the course of a month, for the remainder of the month, and must be submitted to the revenue-collecting office in duplicate at least three days before the first filling with mash.

3. The owner of the distillery must fill out on page 2 of the form, columns 1 to 10, and on page 4, column 1 to No. 1, as well as columns 2 to 4 and 7 to 9. Columns 7 and 8 of page 2 of the form remain unfilled if an independent subsidiary declaration is given concerning the mash filling of the yeast vessels. The declaration of operation here to be given must be written distinctly, and nothing thereof must be changed or crossed out. On the second page, at the end the declaration of operation, must be furnished name of place and date, and be executed by the owner of the distillery by his signature.

4. Operating plans defectively drawn up are at once returned by the revenue office, and in such cases the submitting of them is considered as not to have taken place.

5. If upon the examination of the operating plan nothing is found out of the way, both copies are approved and executed by the revenue-collecting office; one copy will be returned to the owner of the distillery, who is bound to affix it in an appropriate receptacle before the first mash filling in the distillery and to keep it uninjured throughout the continuance of the operation.

6. After the expiration of the operating time this copy must be returned by the owner of the distillery to the revenue-collecting office within three days, and may then be exchanged for the second copy, which has been left with the revenue-collecting office.

Declaration of operation by the taxpayers.

Kinds and quantity of mash material for every vat.	Number of mash vats.	The mash filling begins.			Date the mash is distilled.	The yeast vessels are filled with mash.		Date the rectification of low wine or spirits takes place.	1. Time at which an injury was perceived in the apparatus or tubing, and description of the injury. 2. For industrial distilleries any changes to be noted before the beginning in the operation that had been announced.
		Day of the week.	Date.	Forenoon (a. m.), afternoon (p. m.).		Date.	Number of yeast vessels.		
1	2	3	4	5	6	7	8	9	10
		From last month there are to be distilled:							
.....	....	Sunday	....	.....	.....	.....	.....	.....	
.....	....	Monday	....	.....	.....	.....	.....	.....	
.....	....	Tuesday	....	.....	.....	.....	.....	.....	
.....	....	Wednesday	....	.....	.....	.....	.....	.....	
.....	....	Thursday	....	.....	.....	.....	.....	.....	
.....	....	Friday	....	.....	.....	.....	.....	.....	
.....	....	Saturday	....	.....	.....	.....	.....	.....	
.....	....	Sunday	....	.....	.....	.....	.....	.....	
.....	....	Monday	....	.....	.....	.....	.....	.....	
.....	....	Tuesday	....	.....	.....	.....	.....	.....	
.....	....	Wednesday	....	.....	.....	.....	.....	.....	
.....	....	Thursday	....	.....	.....	.....	.....	.....	
.....	....	Friday	....	.....	.....	.....	.....	.....	
.....	....	Saturday	....	.....	.....	.....	.....	.....	
.....	....	Sunday	....	.....	.....	.....	.....	.....	
.....	....	Monday	....	.....	.....	.....	.....	.....	
.....	....	Tuesday	....	.....	.....	.....	.....	.....	
.....	....	Wednesday	....	.....	.....	.....	.....	.....	
.....	....	Thursday	....	.....	.....	.....	.....	.....	
.....	....	Friday	....	.....	.....	.....	.....	.....	
.....	....	Saturday	....	.....	.....	.....	.....	.....	
.....	....	Sunday	....	.....	.....	.....	.....	.....	
.....	....	Monday	....	.....	.....	.....	.....	.....	
.....	....	Tuesday	....	.....	.....	.....	.....	.....	
.....	....	Wednesday	....	.....	.....	.....	.....	.....	
.....	....	Thursday	....	.....	.....	.....	.....	.....	
.....	....	Friday	....	.....	.....	.....	.....	.....	
.....	....	Saturday	....	.....	.....	.....	.....	.....	
.....	....	Sunday	....	.....	.....	.....	.....	.....	
.....	....	Monday	....	.....	.....	.....	.....	.....	
.....	....	Tuesday	....	.....	.....	.....	.....	.....	
.....	....	Wednesday	....	.....	.....	.....	.....	.....	
.....	....	Thursday	....	.....	.....	.....	.....	.....	
.....	....	Friday	....	.....	.....	.....	.....	.....	

Finding result of inspection.

Running number of inspection certificates.	Time of inspection.			Condition in which the mash vats were found.					State of operations.									Name and official rank of the inspecting officer.
	Day.	Hour.		Filled with fresh mash (number).	In rising fermentation (number).	In subsiding fermentation (number).	Ready for distillation (number).	Empty (number).	Of the distilling apparatus (in the case of apparatus having several parts. (Boiler = 1a, mash warmer = 1b, previous heating apparatus = 1c).	Of the rectifying apparatus.	The counting devices of the measuring apparatus show—		Condition of the official fastenings in each case.				Condition of the auxiliary utensils and yeast vessels in column 1, page 4, and serving for the preparation of mash and for the storage thereof, and other remarks.	
		Forenoon.	Afternoon.								Volume (liters).	Pure alcohol (liters).	In the measuring apparatus.	In the distilling apparatus.	In the tubing.	In the receiving vessel and the room containing the same.		
11	12	13		14	15	16	17	18	19	20	21	22	23	24	25	26	27	28
1																		
2																		
3																		
4																		
5																		
6																		
7																		
8																		
9																		
10																		
11																		
12																		
13																		
14																		
15																		

I. Declaration.	Inventory and discharge.									Note of the inspection.
(a) What apparatuses and of what construction are in use: (1) For distillation of mash; (2) for rectifying of low wine, etc. (b) What subsidiary utensils, and at what time they are used for preparing the fresh mash and for keeping the ripe mash. Under (a) and (b) give numbers. (c) What kind of yeast is used.	Mash and distilling utensils reported for the distilling operation.					Under official closure and and out of use remain or are added.				
	Designation of the utensils.	No.	Contents in liters.	Number of mash fillings.	Mash space for which tax is to be paid, in liters.	Designation of the utensils.	No.	Contents in liters.	From / to	
1	2	3	4	5	6	7	8	9	10	11
II. Particular official concessions.				*Calculation of tax.* The preceding plan of operation filed on —— for the month of —— has been examined, established, and entered under No. —— upon the register of applications for operations. The mash-vat tax of the mash space calculated above at —— liters, amounts at the rate of —— for 1 hectoliter to —— marks, —— pfennig. —— the —th of ——, 18—. Royal —— Office. *Further fixation of tax.*							

APPENDIX E 2.

FOR DISTILLATIONS FROM NONFARINACEOUS MATERIALS.

[District of the revenue office at ——. Number —— of inventory. Number —— of application register for operation. Number —— of revenue register. Month of ——, 18—.]

Operating plan of the distillery of ———, in ——— street, at number ———, and ——— kilometers from the revenue office.

INSTRUCTIONS FOR THE OWNERS OF DISTILLERIES.

1. Only the blanks (forms) to be furnished by the revenue office can be used for the operating plan.

2. The operation must be reported beforehand for a whole calendar month in advance whether the distillation is carried on throughout the month without interruption or only during part of it.

3. The operating plan, which must be submitted to the revenue office in duplicate at least three days before the first day of distillation, as a rule, must relate only to materials subject to one and the same rate of tax for the period for which the plan is made out. Anyone that pays the respective higher rate of tax for the whole operating time reported is subject to no limitation in regard to the choice of the material in question and any variation thereof.

4. During the period for which the operating plan is made out, and so long as the distillery has not been placed under seal, no other store of material than the one stated in the operating plan must be present in the distillery.

5. The owner of the distillery has to fill out, on the second page of the blank, columns 1 to 10, and on the fourth page, columns 1 to 3. The declaration of operations to be given here must be written distinctly, and nothing must be changed or crossed out. On the second page, at the end the declaration of operation, there must be provided the name of the place, and the date, and it must be executed by the owner of the distillery by his signature.

6. Operating plans showing defects in the drawing up are at once returned by the revenue office, and in such cases the filing of them is regarded as not having taken place.

7. If the examination of the operating plan discloses nothing that is amiss, the two copies are approved and executed by the revenue office. One copy is returned to the owner of the distillery, who is bound to affix it before the first day of distillation in the distillery in the receptacle provided for that purpose, and to keep it there uninjured throughout the duration of the operation.

8. After the expiration of the operating time this copy must be returned by the owner of the distillery within three days to the revenue office, and may then be exchanged for the second copy, which had remained with the revenue office.

Declaration of operations by the person liable to tax.

Store of material.				The material is distilled—					
	Of the storage vessels.					Each day.			
Kind of material.	Designation in the order of succession in distillation.	Place of storage.	Capacity, or same after deducting one-tenth for the upper layer (liters).	On the still (number).	On the following days.	During the following hours.	During the following alembic distillations.	Number of the storage vessels from which distillation is carried on.	Declaration showing the days on which and the still with which the low wine obtained is distilled.
1	2	3	4	5	6	7	8	9	10
	No.								

Finding of the inspection.

Time of inspection.			State in which the vessels containing material were found.			State in which the stills were found.			The counting devices of the measuring apparatus show—		Condition of the official fastenings—					
	Hour.					In operation—										
Day.	Forenoon.	Afternoon.	Untouched (number).	Touched (number).	Empty (number).	With material.	With low wine.	Empty.	Volume (liters).	Pure alcohol (liters).	Of the necessary apparatus.	Of the distillery apparatus.	Of the tubing.	Of the collecting vessels (receivers).	Other remarks relating to the inspection.	Name and official rank of the inspecting officer.
12	13		14	15	16	17	18	19	20	21	22	23	24	25	26	27

Inventory and discharge.

Of the utensils present in the distillery, the following have been reported for operation:			Remarks.
Designation of utensils.	Number.	Contents in liters.	
1	2	3	4
The following remain entirely out of use:			

The above plan of operation, submitted on the —th day of ——— 18—, for the month of ———, 18—, has been examined, fixed, an entered in the register of applications for operation under No. —— According to the finding of the inspection ——— liters of ——— ar used for spirits, on which the tax, at the rate of —— pfennig per hect liter, is —— marks, —— pfennig.

———, this —th day of ———, 18—.

Royal ——— Office.

APPENDIX F.

Counter register relating to the record of the measuring apparatus (sampler) placed in the distilery of ———, at ———, for the quarter ending ———.

[This register contains ——— folios, which have been tied with a cord and pressed with the official seal. ——— the —— of ———, 18—.]

INSTRUCTION FOR THE OWNER OF THE DISTILLERY.

Immediately before the beginning and after the close of the daily mash distillation the owner of the distillery or his representative is bound to enter in columns 1 to 4 of the register, which has been kept for this purpose in quarterly periods, the condition of the counting devices of the existing measuring apparatuses. For distilleries which distill uninterruptedly day and night, the periods of time in which these entries are to be made are fixed by the main office. On intervening days, when no distillation takes place, this entry is to be omitted. The register is to be kept, together with the operating plan, in the distillery, and must be formally closed at the expiration of every quarter by the owner of the distillery, and be sent to the revenue office before the fifth day of the first month of the new quarter.

The last entry of every quarter is to be carried forward by the owner of the distillery in the register for the next quarter, and the correctness of this transfer must be certified by the revenue inspecting officer who first appears in the distillery in the new quarter.

In columns 5 and 6 of the counter register the owner of the distillery is to enter any disturbance in the regular course and injuries to the official fastening of the apparatus immediately after they have been perceived.

The form for the counter register is furnished by the revenue authority.

If a sampler is set up in the distillery, the counter register is also to be conducted in the manner prescribed above, only no entries are to be made in column 4.

Running number.	Time of entry.			Indication of the measuring apparatus (sampler) for—		Time of occurrence of a disturbance in the regular course of the apparatus, and nature of disturbance.			Time of observation of an interference with a fastening, and detailed description thereof.			Signature of the person making the entry.
	Month.	Day.	Hour.	Spirits.	Alcohol.	Month.	Day.	Hour.	Month.	Day.	Hour.	
1	2			3	4	5			6			7
State of counting devices at the close of the 3d quarter, 1887-88				433, 773¼	238, 560. 2							
In agreement with the register of the preceding quarter. ———, revenue inspector.												
1	January ..	2	7.00 a.m..	433, 773¼	238, 560. 2							
2	....do	2	6.00 p.m..	434, 446¾	239, 186. 2							
3	....do	3	7.00 a.m..	434, 446¾	239, 186. 2							
4	....do	3	5.00 p.m..	435, 140	239, 825. 7							
5	....do	4	6.00 a.m..	435, 140	239, 825. 7							
6	....do	4	4.00 p.m..	435, 653¼	240. 300. 6							
7	....do	5	6.00 a.m..	435, 653¼	240, 300. 6							
8	....do	5	4.30 p.m..	436, 153¾	240, 764							
9	....do	6	7.00 a.m..	436, 153¾	240, 764							
10	....do	6	5.00 p.m..	436, 660	241, 233. 3							
11	....do	7	7.00 a.m..	436, 660	241, 233. 3							
12	....do	7	5.30 p.m..	437, 166¾	241, 703. 5							
13	....do	8	7.30 a.m..	437, 166¾	241, 703. 5							
14	....do	8	6.00 p.m..	437, 682	242, 156. 9							
15	....do	10	7.30 a.m..	437, 682	242, 156. 9							
						Jan .	10...	3 p.m.	Jan .	10...	11 a.m.	
						Although, according to the indication of the alcoholometer in the antechamber spirits of 92 to 93 per cent are flowing into the measuring apparatus, yet the lever records only spirits of 80 per cent.			Owing to falling masonry the zinc cover of the apparatus is dented at one corner, and one lead has been torn off.			

Time of inspection.	Inspector's findings.													
	According to the indications noted in columns 3 and 4, the following amounts flowed through the measuring apparatus (sampler):				On the same day the following amounts of mash space in hectoliters were distilled.	Therefore there was the following cubical output on the same day from one hectoliter of mash space.		Indications observed on the day of inspection—		Date of verification of spirits, and time within which the same was obtained.	Quantity of spirits in liter percentages.		Difference as compared with the official verification in liter percentages.	
	Date.	Spirits (liters).	Alcohol (liters).	Alcoholic strength of the spirits according to columns 10 and 11, or alcoholic strength of the accumulated sample.		Spirits (liters).	Alcohol (liters).	Of the alcoholometer in the antechamber (per cent).	Of the lever on the alcohol curve (per cent).		According to the indications of the apparatus.	According to the official verification.	More.	Less.
8	9	10	11	12	13	14	15	16	17	18	19	20	21	22
	Entries.													
Jan. 2, 1.30 p.m.	Jan. 2	674½	626	93	130.09	5.2	4.8	Operation ended. ——, revenue inspector.						
	Jan. 3	693½	639.5	92	131.44	5.3	4.9							
	Jan. 4	513½	474.9	93	97.78	5.2	4.9							
Jan. 5, 4.30 p.m.	Jan. 5	500	468.4	93	97.83	5.1	4.7	Operation ended. ——, revenue inspector.		Jan. 5 Jan. 2–5	220,380	218,430		1,950
	Jan. 6	506½	469.3	93	99.54	5.1	4.7							
Jan. 8, 11.45 p.m.	Jan. 7	506½	470.2	93	97.78	5.2	4.8	92	92½					
								——, revenue inspector.						

APPENDIX G.

[Main office ——. Levying office ——. This register contains —— folios, which have been fastened by a cord sealed hereon at the ends by the official seal. —— the —— of ——, 18—. Kept by ——.]

Account book containing the production of the distillery of ——, at ——, for the quarter ending ——, 18—.

In columns 8 to 15 the additions to the consumption tax (section 42 of the law) are not considered; these columns are merely to show what quantities of spirits the owner of the distillery has produced at the lower or at the higher rate of the consumption tax.

In column 16 each respective horizontal sum of columns 8, 10, 12, and 14 is to be entered; the sum of column 16 must never exceed the annual quantity of spirits to be stated in column 7, which the owner of the distillery is allowed to produce at the rate of tax (duty) of 50 pfennigs per liter of pure alcohol. If the annual quantity is reached further discharges can only take place at the tax rate of 70 pfennigs.

At the close of the first three quarters the sum of column 16 is to be deducted from the annual quantity of spirits mentioned in column 7 at the lower rate of tax, and the remainder in column 7 of the account book must be carried forward for the next quarter; the chief comptroller of the district must examine this transfer and certify to its correctness both in the account book of the quarter expired and in that of the next quarter.

Running number.	Date of verification of spirits.	The spirits were produced in the time from — to —.	Spirits produced.			Remarks and statements concerning the addition to the consumption tax which the owner of the distillery has to pay for the spirits produced by him.
			Amount in liters.	True alcoholic strength.	Amount in liter percentages.	
1	2	3	4	5	6	7
						Sample
1	1888. Apr. 10	1888. Apr. 4–9	900	80	72,000	The owner of the distillery is authorized to produce 21,600 liters of pure alcohol per year at the tax rate of 0.50 marks per liter of pure alcohol.
2	Apr. 20	Apr. 10–19	1,000	81	81,000	.....
3	Apr. 29	Apr. 20–28	920	80	73,600	.....
						Total.....
						Settlement.
						Liter percentages.
						It shall be permitted to produce in the operating year, at the lower tax rate..... 2,160,000
						In the —— quarter of the operating year 18— there have been produced..... 1,847,100
						Remainder..... 312,900
						which has been carried to carried to column 7 of the account book of the fiscal year 18—.
						——— this —th day, 188—.
						——— Office.

The spirits produced (columns 4–6) have been further discharged at the following rate of consumption tax for one liter of pure alcohol (liter percentages).								According to columns 8, 10, 12, and 14, the following total has been discharged at the lower tax rate (liter percentages).	Further record of the spirits.		Remarks, especially statement of quantity of spirits remaining undischarged and signature of discharging officer.
For taxation.		For public or private storage.		For exportation.		For methylation.			Name of register.	Leaf, folio, and number thereof.	
50 pf.	70 pf.	50 pf.	70 pf.	50 pf.	70 pf.	50 pf.	70 pf.				
8	9	10	11	12	13	14	15	16	17	18	19
entries.											
12,000	.....	30,000	.....	.....	30,000	.....	.....	42,000	Notification register	$\frac{1}{4}$	Name.
									Storage register	$\frac{2}{1}$	
									Register of shipment certificates drawn up.	$\frac{2}{1}$	
.....	.....	40,000	.....	.....	35,000	.....	6,000	40,000	Storage register.....	$\frac{2}{1}$	Name.
									Shipment certificates register.	$\frac{2}{1}$	
									Methylated register.	$\frac{2}{1}$	
33,600	.....	40,000	.....	.....	.....	.....	.....	73,600	Notification register.	$\frac{5}{10}$	Name.
									Storage register	$\frac{2}{1}$	
978,500	.....	868,609	.....	.....	146,800	.....	10,000	1,847,100	.....	.....	

The annexed settlement has been examined and found correct; the remainder of 312,900 liter percentages, which may be produced at the lower tax rate, has been correctly carried to the account book for the —— quarter of the fiscal year 18—.

——this —th day of—— 188—.

THE CHIEF REVENUE TAX COMPTROLLER.

APPENDIX G.

Report of spirits for the consumption tax, for reception in the warehouse, for discharge by means of a shipment certificate, and for methylation.

1. For the purpose of paying the consumption tax and of methylation the report must be filed only in one copy; for reception in a warehouse, and for discharge by means of a shipment certificate, on the contrary, it must be filed in duplicate with the revenue levying office.

2. Columns 1 to 7 are to be filled by the applicant; he is also to indicate on the title page the kind of discharge applied for by crossing out the lines that do not refer to him.

3. Columns 8 to 11, as well as 24 and 25, are to be filled by the revenue office, columns 12 to 23 by the discharging officer, but the revenue office has to examine the amount of dues calculated by the discharging officers and is responsible for the correctness thereof.

Statement of the applicant.							Statements by the levying office.			
Running number.	Vessels in which spirits are transported.		Spirits.		Rate of consumption tax applied for in behalf of the discharge of spirits: (a) According to section 1 of the law of June 24, 1887; (b) addition according to section 42 of same for 1 liter of pure alcohol, meaning thereby spirits for which the mash vat or material tax—		Rate of consumption tax to be applied: (a) According to section 1 of the law of June 24, 1887; (b) addition according to section 42 of the same for 1 liter of pure alcohol, meaning thereby spirits for which the mash vat or material tax—		Quantity of spirits reported in liter percentages (according to columns 4 and 5).	According to the application the following are the calculated amounts (a) of the consumption tax; (b) of the additio
	Mark and number.	Number and kind.	Quantity (liters).	True alcoholic strength according to tralles.	Is paid (pfennigs).	Is not paid (pfennigs).	Is paid (pfennigs).	Is not paid (pfennigs).		
1	2	3	4	5	6	7	8	9	10.	11
										M. Pf

Submitted on the — day of ——.
Entered in the application register under No. ——.
The consumption tax (column 11) has been secured by the deposit of —— marks, —— pfennigs (deposit manual sheet ——, No. —— by respite
—— Office.
[SEAL.]

Date and signature of applicant.

(Signature)

Inspector's finding and calculation of tax.													Further record of the spirits.		
Vessels in which spirits are transported.															
Mark and number.	Number and kind.	Gross weight without rolling bands (kilograms).	Dead weight ascertained by the gauge office or otherwise officially (kilograms).	Net weight after deduction of the dead weight officially ascertained (kilograms).	Net weight after deducting the normal dead weight granted in view of exportation (kilograms).	Apparent alcoholic strength stating the temperature.	True alcoholic strength (per cent).	Quantity in litérs.	Number of liter percentages to be taxed.	Rate of consumption tax for 1 liter of pure alcohol: (a) According to section 1 of the law of June 24, 1887; (b) addition according to section 42 of the same (pfennigs).	Amount of consumption tax: (a) According to section 1 of the law of June 24, 1887; (b) addition according to section 42 of same.		Designation of register.	Folio and number.	Remarks.
12	13	14	15	16	17	18	19	20	21	22	23		24	25	26
											M.	*Pf.*			

APPENDIX I.

[Main office district, ——. Collecting office, ——.]

Register of notifications with regard to the payment of the consumption tax on spirits for the —— quarter, 18—.

This register contains ——— sheets, through which passes a string attached here by the official seal.

[——, this —th day of ——, 188—. Kept by ——.]

Running number.	Date of presentation of application.	Name and residence of applicant.	The spirits reported came from the distillery of—	Date on which the application was filed with the discharging officer.	Date on which the application was returned by the discharging officer to the levying office.	The spirits have been discharged in the account book of the owner of the distillery under the number given below.	The spirits are further recorded—		Remarks.
							In the register.	Under number.	
1	2	3	4	5	6	7	8	9	10

APPENDIX K.

Receipt for deposit of spirit consumption tax and addition thereto.

—— marks —— pfennigs, spirit consumption tax, and —— marks —— pfennigs, addition thereto; total, —— marks —— pfennigs. In words, —— marks —— pfennigs were deposited in cash by ——— at ———, pursuant to provisional calculation by the undersigned collecting office for the spirits reported by him, for the payment of the above-mentioned taxes.

The notification is recorded in the register of notifications with a view to the payment of the consumption tax on spirits under No. ——, and the amount deposited is recorded in the manual of deposits, page ——, No. ——.

———, this —th day of ———, 188—.

——— Office.

[SEAL.] (Signature.)

NOTE.—As soon as the consumption tax or addition thereto has been fixed by the discharging officer, the person presenting the notification shall pay to the collecting office any sum that may have been fixed in excess of that deposited by him. Failing to do so, the amount will be collected by way of legal execution.

If, on the other hand, the amount deposited exceeds the consumption tax and addition fixed by the discharging officer, then the amount in excess may be obtained at the collecting office within eight days; if this is not done, and if the amount exceeds 20 pfennigs, it will be sent to the recipient by mail at his expense.

APPENDIX L.

[State of the Confederation.]

Spirit shipment certificate I.

[No. ——. Receiving office ——. Transferred to ——. Executive office ——. Duration of shipment, up to ——. Extended to ——. Route of transportation ——.]

DECLARATION OF ACCEPTANCE BY DRAWER OF SHIPMENT CERTIFICATE.

—— assume this shipment certificate, with the obligation to submit the spirits therein designated for inspection and further discharge in unchanged condition and quantity, within the stated time, by the stated route, and to the stated office. At the same time —— declare —— obliged to assume the liability for the consumption tax resting on these spirits and for the addition thereto.

These obligations become extinct only when the receiving office shall have certified by the issue of the certificate of disposal that the above-mentioned obligations have been fully discharged.

——, this —th day of ——, 188—.

(Drawer's signature.)

——, this —th day of ——, 188—.

—— Office.

[SEAL.] (Signature.)

Preceding register.
Notification register.
Shipment certificate.
Storage register.

Certificates of disposal.

(According to form for customs pass bills.)

Presented on the — day of ——. The

Application, extract from the application, from the shipment certificate, or the deposit certificate.

Number of the several items.	Names and residences of consignees.	Vessels in which spirits are transported.						Apparent alcoholic strength, stating the temperature.	True alcoholic strength (per cent).	Quantity in liters.	Rate of consumption tax to be applied: (a) According to section 1 of the law of June 24, 1887; (b) addition according to section 42 of the same for 1 liter of pure alcohol, meaning thereby spirits for which the mash vat or material tax—		Suggestions of the person disposing of the goods.
		Mark and number.	Number and kind.	Gross weight without any rolling bands (kilograms).	Dead weight ascertained by gauge office or otherwise officially (kilograms).	Net weight after deducting the dead weight officially ascertained (kilograms).	Net weight after deducting the normal dead weight granted with a view to the exportation of spirits (kilograms).				Is paid (pfennigs).	Is not paid (pfennigs).	
1	2	3	4	5	6	7	8	9	10	11	12	13	14

pection is made by ——.

Vessels in which spirits are transported.						Inspector's finding and calculation of tax.						Further record of spirits.		
Mark and number.	Number and kind.	Gross weight after deducting any rolling bands (kilograms).	Dead weight ascertained by the gauge office or otherwise officially (kilograms).	Net weight after deducting dead weight officially ascertained (kilograms).	Net weight after deducting the normal dead weight granted in view of the exportation of spirits (kilograms).	Apparent alcoholic strength, stating the temperature.	True alcoholic strength (per cent).	Quantity in liters.	Number of liter percentages for which tax must be paid.	Date of consumption tax for 1 liter of pure alcohol: (a) According to section 1 of the law of June 24, 1887; (b) addition according to section 42 of the same.	Amount of consumption tax: (a) According to section 1 of the law of June 24, 1887; (b) addition according to section 42 of the same.	Designation of register.	Folio and number thereof.	Remarks concerning the application of fastenings.
15	16	17	18	19	20	21	22	23	24	25	26	27	28	29
										Pf.	*M. Pf.*			

Notices with regard to the changed destination of the spirits.

(According to the form for customs escort certificate I.)

APPENDIX M.

[Federal—State.]

Bill of lading for spirits II.

[No. ——. Exempting office ——. Receiving office ——. Presentation of the spirits ——.]

TERM OF PAYMENT.

—— marks —— pfennigs, consumption tax, —— marks —— pfennigs, addition to same; total, —— marks —— pfennigs. In words, —— marks —— pfennigs are to be paid at the receiving office on or before the ——— under submission of this bill of lading, or else the collection of the amount will be made from the drawer of the bill of lading (consignor). The proof of the payment of the tax must be given on or before the expiration of the term fixed for the transmission of the bill of lading.

Security given.

DECLARATION OF ACCEPTANCE BY THE DRAWER OF THE BILL OF LADING.

——— accept this bill of lading with the liabilities resulting therefrom.

———, the ———, 188—.

(Signature.)

———, the ———, 188—.

——— Office.

[SEAL.] (Signature.)

Preceding register.
Application register.
Bill of lading register.
Deposit register.

Certificates of disposal.

(According to form for customs pass bill II.)

Application, abstract from the application, from the pass bill, or the certificate of deposition.

Number of the single items.	Names and residences of consignees.	The transporting vessels.						Apparent alcoholic strength, with statement of temperature.	True alcoholic strength (per cent).	Quantity in liters.	Rate of consumption tax to be applied: (a) According to section 1 of the law of June 24, 1887; (b) addition according to section 42 of the same for 1 liter of pure alcohol and that for spirits for which the mash-tub tax or material tax—		Suggestions made by the disposer of the goods.
		Mark and number.	Number and kind.	Gross weight without rolling hoop, if there be any (kilograms).	Dead weight ascertained by the gauging office or any other office (kilograms).	Net weight after deduction of the dead weight officially ascertained (kilograms).	Net weight after deduction of the normal dead weight allowed in regard to the exportation of spirits (kilograms).				Will be paid (pfennigs).	Will not be paid (pfennigs).	
1	2	3			6	7	8	9	10	11	12	13	

Findings of the inspection and calculation of taxes.												Further reference of the spirits.		
The transporting vessels.														
Mark and number.	Number and kind.	Gross weight after deduction of rolling hoops, if there be any (kilograms).	Dead weight ascertained by the gauging office or any other office (kilograms).	Net weight after deduction of the weight officially ascertained (kilograms).	Net weight after deduction of the normal dead weight allowed in regard to the exportation of spirits (kilograms).	Apparent alcoholic strength, with statement of temperature.	True alcoholic strength (per cent).	Quantity in liters.	Number of liter percentages on which tax must be paid.	Rate of consumption tax per 1 liter of pure alcohol: (a) According to section 1 of the law of June 24, 1887; (b) addition according to section 42 of the same.	Amount of the consumption tax: (a) According to section 1 of the act of June 24, 1887; (b) addition according to section 42 of the same.	Denomination of the register.	Its folio and number.	Remarks over application of fastenings, etc.
15	16	17	18	19	20	21	22	23	24	25	26	27	28	29
										Pf.	*M. Pf.*			

Appendix N.

[Main office district ——. Collecting office ——. Kept by ——

Register of bills of lading for spirits drawn up in the —— quarter, 18—.

This register contains —— sheets, through which there has been passed a string which is here fixed with the official seal.

———, this —th day of ———, 18—.

Day of execution.	Running number.	Kind of bill of lading.	Designation and number of preceding register from which the shipment originates.	Name and residence of person drawing the bill of lading.	Office to which the bill of lading is directed.	Day on which the validity of the bill of lading expires.	Day on which the discharge certificate was received.	Kind and amount of security deposited.	Remark showing what was done in case the bills of lading were not discharged at the proper time.
1	2	3	4	5	6	7	8	9	10

Appendix O.

[Main office district ——. Collecting office ——. Kept by ——.]

Register of bills of lading for spirits received in the —— quarter, 18—.

This register contains —— sheets, through which a string has been passed, which is here fixed with the official seal.

———, this —th day of ———, 18—.

Day of entry.	Running number.	Bill of lading.				Name of last holder of goods.	Name of receiver of goods.	Running numbers or letters of the extracts submitted from the bill of lading.	Running numbers or letters of the items of spirits in the bill of lading.	Day of exit of spirits gone abroad.	The spirits not sent abroad are further recorded—		Discharge certificate.		Remarks.
		Place where made out.	Kind.	Number.	Day and month.						In the register.	Under number.	Number in order under which the bill of lading has been entered.	Day of execution.	
1	2	3	4	5	6	7	8	9	10	11	12	13	14	15	16

APPENDIX P.

[No.* ——. Day of arrival* ——.]

Discharge certificates relating to the bills of lading for spirits originating with the —— office at ——, and discharged by the —— office at ——, in the time from the —th of —— to the —th of ——.

Number in order.	Kind of bill of lading.	Number of register by which the bill of lading for spirits was made out.	Date of execution of bill of lading.			Number of register by which the bill of lading for spirits is received.	Date of discharge of bill of lading.			Remarks.
			Day.	Month.	Year.		Day.	Month.	Year.	

*To be filled by the office which makes out the bill of lading. The several bills of lading are entered in their order in the register showing bills of lading and received bills of lading.

APPENDIX Q.

Application relating to alienation of spirits for which the consumption tax is to be paid.

The undersigned informs the levying office at —— that he has alienated (sold) to Mr. ——, in ——, —— liters at —— per cent true alcoholic strength equal to —— liter percentages of the spirits manufactured in his distillery stored away in the warehouse at ——, on which the taxes are still unpaid, and subject to the rate of consumption tax of —— marks, with the addition of —— marks per liter of alcohol.

——, the ——, 188—.

(Signature.)

APPENDIX R.

Regulations for the exemption from duty of spirits for industrial and other purposes.

Exemption from duty of spirits intended for industrial and other purposes shall be allowed under the following provisions, which shall take the place of all provisions heretofore in force:

I. Prerequisite to exemption from duty and modes of control. (a) Extent of exemption from duty.

SECTION 1. Spirits employed for industrial purposes, including the preparation of vinegars, for medicinal, scientific, cleansing, eating, cooking, or illuminating purposes shall be exempt from the consumption tax, including the addition thereto, and shall also be allowed a drawback of the mash-vat or spirit material tax according to the rate prevailing in the exportation of spirits.

SEC. 2. Spirits serving for the alcoholic product which may be used for human consumption shall not be exempt from the tax.

(b) Conditions of exemption.

SEC. 3. The exemption from tax shall be conditioned on the spirits being first methylated, that is to say, rendered unfit for human consumption. If the use of methylated spirits should be inexpedient for some industrial or medicinal purposes, then the methylation may, by way of exception, be substituted by continuous surveillance of the operation or by other mode of control affording equal security.

The detailed arrangements regarding this matter are reserved till further notice to the supreme financial authorities of the land.

(c) Methylation.

SEC. 4. The methylation shall take place by mixing the spirits with the general methylation substance prescribed for that purpose (sec. 8), unless for certain purposes a mixture with other substances (sec. 10) is permitted.

Application for methylation with substances other than that prescribed.

SEC. 5. Whoever desires to have spirits methylated with any other than the general methylation substance and still claim exemption must make a written application for this purpose to the main office of the district, and in so doing certify the place of deposit as well as the purpose for which the methylated spirits are to be employed.

Main office to decide.

The main office shall decide whether the application shall be granted. If granted, it shall be subject at any time to repeal, and it may be refused to persons who have been punished for violating the revenue laws.

(d) Application for methylation.

SEC. 6. Any intended methylation of spirits must be reported to the district revenue office by means of a blank according to Appendix R 1.

Appendix R 1.

The applicant must furnish in every case the methylating substance, and provide the utensils and the assistance required, in the judgment of the revenue office.

(e) Requirements regarding spirits presented for methylation.

SEC. 7. Spirits which have an alcoholic content of less than 80 per cent tralles, as well as perfumed or otherwise mixed spirits, are excluded from methylation.

The smallest amount of spirits to be presented in each instance for methylation shall be 1 hectoliter.

(f) Methylation substance.

(1) General methylation substance.

SEC. 8. The general methylation substance shall be a mixture of two parts of wood spirits and one part of pyridine bases, which must be added to the spirits to be methylated in the proportion of 3 liters to every 100 liters of pure alcohol.

The quality of the various substances used in preparing the mixture must correspond to the requirements stated in Appendix R 2.

Appendix R 2.

SEC. 9. The above described substance can only be admitted for methylation when compounded under official supervision in a factory having the requisite authority therefor from the supreme financial authorities of the land, and when it has since then remained under official seal up to the time of employment; the substance intended for the mixture having first of all been tested by a chemist appointed by the supreme financial authorities of the land. Only suitable vessels of glass, clay, or metal are allowed for the application of fastenings.

In case a fastening is injured, the main office may permit the use of the contents of the vessel for the methylation of spirits if the injury is regarded as having been caused by accident, and if an examination by an official chemist (par. 1), at the cost of the person concerned, proves that the methylating substance is of the requisite quality. Accidental injury.

Manufacturers must admit inspectors and furnish room, utensils, and assistance.

Manufacturers who have been authorized to manufacture the methylation substance must allow the revenue officers and the official chemist charged with the inspection of the operation to have access to the room in which the manufacture and storage of the methylation substance takes place, and they must also submit to the chief officials of the revenue administration upon demand, at any time, for inspection, the books of manufacture and business relating to the production and shipment of the methylation substance, and also to furnish an appropriate room and suitable utensils to conduct the analysis of the methylation substance and of the material employed in its composition, as well as to furnish or cause to be furnished the necessary assistance.

(2) Special methylation substance.

SEC. 10. Manufacturers may be allowed to undertake the methylation of spirits for their own industrial use with pyridine bases of the quality prescribed in section 8, paragraph 2, in the proportion of one-half liter to every 100 liters of pure alcohol, instead of the general methylation substance under the requirements prescribed in the provisions of section 9.

The provisions of section 9 find appropriate application with reference to the requirements under which this methylation substance may be allowed to be used.

Manufacture of vinegar.

In the manufacture of vinegar, spirits may be methylated with the above described addition of pyridine bases, or with 100 per cent of water and 100 per cent of vinegar, with a 6 per cent content of acetic acid (hydrate of acetic acid), or with 100 per cent of water and 50 per cent of vinegar having a content of 12 per cent of acid, the applicant having the right to demand that the quantity of water to be added to the quantity of vinegar, in excess of the prescribed measure, and the quantity of water contained in the spirit presented, shall be taken into account. Instead of water, beer or yeast water may also be used. Beer or yeast water may be used.

Till further notice the following methylation substances for the spirits may be used. In the preparation of—

1. Lacquers of all kinds and varnishes, so far as they are intended for use in the manufacturers' own industry: One-half per cent of turpentine oil.

2. Fulminate of mercury: One-half per cent of turpentine oil or one-fourth per cent of animal oil (bone oil).

3. Aniline colors: 0.025 per cent of animal oil.

4. Chemicals—

(1) Alkaloids: One-half per cent of turpentine oil or 0.025 per cent of animal oil.

(2) Extracts used as medicinal substances, such as jalap and scammony: One-half per cent of turpentine oil.

(3) Chloroform, iodoform, sulphuric ether, antipyrine from acetic ether, chloral hydrate: 0.025 per cent of animal oil.

(4) Collodion, tannin, salicylic and salicylates, 10 per cent of sulphuric ether.

(5) Litharge and acetates (sugar of lead): 0.025 per cent of animal oil.

The methylation of spirits by any of the means above described must not, however, take place except for the purposes reported and in the factory rooms of the manufacturers concerned. Spirits thus methylated may not be conveyed to others.

(g) How the methylation is effected.

SEC. 11. The methylation shall take place in the presence of two revenue officers, one of whom, as a rule, should be a chief officer, at the revenue office; or, upon the application of a manufacturer, the owner of a distillery, or a dealer, in his industrial or business rooms. The officers must note especially that the spirits submitted for methylation have not already been methylated, and that a thorough mixture of the methylation substance with the spirits shall be effected by stirring. The official supervision of the methylation shall take place according to the official force at hand. If it takes place in the industrial or business rooms of a manufacturer, the owner of a distillery, or a dealer, at a place outside of the place of residence of the officers charged therewith, the applicant is bound to pay the traveling expenses and the living expenses of the officers sent, unless the supervision effected is incidental to other service to be performed by the officers on one of their regular circuits.

The mixing of the spirits submitted for methylation shall take place in accordance with the existing regulation concerning the ascertainment of the alcoholic content and the quantity of spirits for which a drawback of duty may be claimed in case of exportation.

(h) Duties of the applicant: (1) In regard to bookkeeping.

SEC. 12. Those manufacturers who have been permitted to use another than the general methylation substance, with the exception of manufacturers of vinegar, must keep an account book according to Appendix R 3, open at any time to the inspection of the inspecting officials, covering the receipt and discharge of methylated spirits, and upon the demand of the main office they must at any time submit a balance sheet to be drawn up according to Appendix R 4. At least once a year an official inventory of the stock in methylated spirits of the kind described must be taken. If the amount on hand differs by more than 10 per cent from what it ought to be, the main office may, at its discretion, dispense with instituting legal proceedings.

Appendix R 3.

Appendix R 4.

According to detailed ordinance of the directive authorities, as the security of the revenue interest demands, the keeping of an account book may also be required of dealers and of such manufacturers as cause the spirits to be methylated with the general methylation substance.

(2) In regard to the storage of the methylated spirits.

SEC. 13. The spirits methylated with a special methylation substance are to be stored exclusively in the place reported.

In all cases in which the keeping of an account book has been specially ordered (sec. 12, par. 2), it shall also be lawful to prescribe the exclusive storage, at the place reported, of the spirits mixed with the general methylation substance.

SEC. 14. Manufacturers who, besides the business for which they employ methylated spirits, carry on another business in which spirits are used without any claim to the drawback of duty (for example, liqueur manufacturers), must keep the two kinds of manufactures completely separate. The same shall apply to manufacturers who in their manufactures employ such spirits as have been methylated with the general methylation substance and others methylated in another way.

(3) In regard to the separation of manufacturing operations when methylated and nonmethylated or differently methylated spirits are used.

Exceptions may be granted by the directive authorities under provisions necessary for the requisite control.

SEC. 15. The officials of the revenue administration are authorized to visit at any time those industrial and business rooms in which the storage or employment or sale of the methylated spirits takes place, to inspect the stores of such spirits, and also to take samples thereof.

(i) Inspection authority of the revenue administration.

The persons concerned are obliged in the case of such inspection to furnish or cause to be furnished necessary assistance, and, upon demand, to declare the state of the methylated spirits according to detailed instructions of the revenue authorities, and to show the same; and similarly the officials are to be given any information demanded in regard to the industrial or business operations, and besides to permit the chief officers of the revenue administration, on demand, to inspect the factory and business books, bills, etc.

SEC. 16. 1. Manufacturers of vinegar are allowed to cause spirits of less strength than 80 per cent tralles down to 25 per cent to be methylated.

(k) Special control for the vinegar manufacture.

2. A distilling apparatus must not be kept in the building in which the manufacture of vinegar takes place, or in an adjoining room.

Exceptions may be granted by the directive anthority in case of need, the necessary control being established.

3. When the methylation of spirits is to be undertaken with water and vinegar for the purpose of manufacturing vinegar, a special blank according to Appendix R 5 is to be used in the application for methylation.

Appendix R 5.

For the purpose of methylation an immovable vessel must in this case be set up in the working rooms of the manufacturer. This vessel must have been measured by the revenue office in the wet way and must be provided with an appliance for reading the height of the liquid.

The testing of the vinegar employed for methylating the spirits shall be done according to the instructions in Appendix R 6.

Appendix R 6.

SEC. 17. The revenue office must keep a register according to Appendix R 7 showing the methylation of spirits, close it every quarter, and send it to the main office together with the applications for methylation.

II. Bookkeeping of the revenue office.

Appendix R 7.

The main office must keep a note book showing the special permissions granted (sec. 5), and establish every quarter a liquidation concerning the drawback of tax to be paid according to Appendix R 8. In so far as the preceding provisions do not involve a change, the keeping of the register of the revenue offices, as well as the liquida-

Appendix R 8.

tion and the order for drawbacks of tax, shall follow the regulations concerning the exportation of spirits; provided, however, that in the calculation of the drawback in all cases that number of liters of pure alcohol must be taken as a basis which has been found by the official inspection of the spirits submitted for methylation.

III. Penalties. SEC. 18. Violations of the provisions of these regulations, or of the ordinances issued thereunder and made known publicly or specially to the person concerned, shall subject the perpetrator, so far as he thereby does not incur another penalty, to punishment according to sections 3 and 4 of the law of July 19, 1879, regarding the exemption from duty of spirits for industrial purposes, or according to section 26 of the law of June 24, 1887, regarding the tax on spirits.

IV. Transition measure. SEC. 19. Under further application of the provisions thus far enforced, manufacturers and dealers who on October 1, 1887, were authorized to methylate spirits with wood spirits are permitted to continue to methylate spirits with this substance to the previous extent, for their own use or for sale to manufacturers or retail dealers, up to the 31st of the same month.

APPENDIX R 1.

To the (royal chief tax office), at ——— : The undersigned gives due notice of the spirits described in the following table for methylation (with the common methylation substance).

The methylation is to take place (in the factory of the undersigned situate in this place).

———, the —— day of ———.

(Signature.)

The notification has been filed this —— day of ——— and entered upon the methylation register, Sub. No. ——

———, the —— day of ———.

(Royal chief tax office.)

(Signature.)

INSTRUCTIONS.

1. The blanks serve for application for methylation of every kind with the exception of methylation with water and vinegar.

Only methylations of the same kind may be applied for by means of one blank.

The first seven columns are to be filled by the applicant, the other by the revenue inspector, but in the case of methylation with turpentine, animal oil, or sulphuric ether no entries will be made in columns 20 to 23.

2. The tax drawback is always calculated according to the amount of pure alcohol ascertained by inspection (column 17).

3. The amount of methylation substance calculated according to the percentage in question (column 18) is to be

rounded off in carrying out the methylation in such way that—

(*a*) In case of the general methylation substance, pyridine bases, turpentine, and sulphuric ether fractions of liters up to 0.5 inclusive are regarded as 0.5 of a liter, larger fractions of liters as 1 liter.

(*b*) In the case of animal oil at least one-twentieth of a liter is taken into account, and every fraction of one-twentieth of a liter is regarded as a full twentieth of a liter.

	I. Report—						II. Findings of the revision (inspection)—									
	Of the casks.			Of the spirits.			Of the casks.					Of the spirits.				
										Net weight after deduction of—						
Serial number.	Mark.	Number.	Branded tare (kilograms).	Quantity (liters).	True alcoholic strength according to tralles (per cents).	Quantity of pure alcohol (liters).	Gross weight (kilograms).	Branded tare (kilograms).	Established by weighing tare (kilograms).	Tare branded or established by weighing (kilograms).	Normal tare (kilograms).	Apparent alcoholic strength according to tralles (per cents).	Grades of temperature according to Reaumur.	True alcoholic strength according to tralles (per cents).	Quantity (liters).	Quantity of pure alcohol (liters).
1	2	3	4	5	6	7	8	9	10	11	12	13	14	15	16	17
																Sample
1	R. E.	791	44	247	95	234.65	247	44	.....	203	.....	93	+7	05	249	236.55
2	△	89	43	266	92	244.72	261	43	.....	218	.....	90.5	+7	92	264	242.88
				513	.....	479.37									513	479.43

III. Methylation under revenue control.						
	The mixtures.					
		Strength according to the alcoholometer.				
e quantity of ure alcohol column 17) is nixed with the ommon methyl- ting substance liters).*	Quantity (sum of columns 16 and 18) (liters).	Apparent strength according to tralles (per cents).	Grades of temperature according to Reaumur.	True strength according to tralles (per cents).	Quantity in liter per cents (product from columns 19 and 22).	Remarks of the revenue officer, especially concerning the methylating substance closure of the vessels by the revenue office, and quality of the materials.
18	19	20	21	22	23	24
try.						
7.5	256.5	93.5	+9	95	24,367	1 carboy with the common methylation agent according to bill of lading obtained from —— in —— and containing 50 liters; original fastening, 1 lead seal of the chief revenue office at ——, found in good order; carboy with the rest of the methylation agent fastened again with 1 lead seal.
7.5	271.5	91	+9	92	24,978	
15	528				49,345	

—— the —— day of ——.

——, *Supervisor of Revenues.*

——, *Chief Controller of Revenues.*

*The place for stating the methylating substance remains open in the first print.

APPENDIX R 2.

Quality of the components of the general methylating substance.

1. WOOD SPIRITS.

The wood spirit shall be colorless or faintly yellowish. Its specific gravity, at a temperature of 15° C., referred to water of like temperature, must not exceed 0.480. On distilling 100 volumes of wood spirit up to a temperatue of 75° C., at least 90 volumes should pass over. The wood spirit shall admit of being mixed with water in any proportion without notable turbidity. The contents of the wood spirit in acetone must exceed 30 per cent. The wood spirit must contain at least 3 but not more than 4 per cent of those components which discolor bromine; and even after dilution of the wood spirit with an equal quantity of water, and when it has been left standing for some time over a charcoal fire, it should still contain 2 per cent of those components.

Characteristics of wood spirits.

2. THE PYRIDINE BASES.

The mixture of pyridine bases shall be colorless or faintly yellowish. Its water content should not exceed more than 10 per cent. On distilling 100 volumes of the mixture up to a temperature of 140° C., at least 90 volumes should pass over. The mixture should evaporate on platinum plates without residue; it should admit of being mixed with water in any proportion without notable turbidity.

Pyridine bases.

APPENDIX R 3.

Account book of the ———, manufacturer ——— at ——— relating to receipts and withdrawal of methylated spirits.

[This book contains twenty folios, which are fastened by a cord sealed hereon by the undersigned, ———, the ———. This book is to be in custody ———.]

INDEX OF CONTENTS.

Methylation with the common methylating substance, Sec. I; methylation with 10 per cent sulphuric ether, Sec. II.

INSTRUCTIONS.

1. The account book is to be kept according to this model regarding the production and employment of methylated spirits by manufacturers who are allowed to methylate spirits for their own industrial use instead of the general methylation substance with (*a*) pyridine bases, (*b*) turpentine, (*c*) animal oil, (*d*) sulphuric ether.

If a manufacturer causes methylated spirits of the several kinds described to be prepared, the record for each kind is made according to the order of the revenue authorities either in a special account book or in a special division of the same account book.

In regard to the spirits methylated with the substances under *b*, *c*, and *d*, no entries are made in 4, 9, and 10.

2. The entries under "I. Receipts" must always be made immediately upon the conclusion of the methylation. The entries in columns 3 and 4, respectively, are the sums from columns 17 and 21, respectively, of the application. The agreement is certified to by the revenue officers who have supervised the methylation.

3. Under "II. Withdrawal" the columns 6 to 11 are to be filled on the days on which the item in question is taken from the stated place of storage for employment.

The filling of columns 12 and 13 is required only for spirits methylated with other than the general methylation substance. These entries need not be made for every single item in columns 6 to 11, but must be made at the latest at the close of every quarter, according to the total result. The datum of entry is to be noted in column 14.

4. In ascertaining the percentage of liters for column 10 fractions up to 0.50 inclusive are dropped, larger fractions are accounted as 1.

5. After every quarter the account book is to be closed within the next three days in columns 3 and 4, respectively, as well as columns 8 and 10, respectively.

I. Receipts of methylated spirits—					II. Removal of methylated spirits.									
		Quantity of methylated spirits produced—				A. Removal for use—					B. Results of the use.			
							Of the removed methylated spirits.							
Serial number.	Of the methylation.	In liters.	In liter-per cents.	Annotations of the revising revenue officers.	Serial number.	Of the entry.	Quantity in liters.	True strength in per-cents, according to tralles.	Quantity in liter-per-cents.	The removed methylated spirits shall be used for—	Number of kilograms or liters of article produced (column 11) corresponding to the amount of spirits withdrawn (column 8).	Consumption of methylated spirits for every 100 kilograms or every 100 liters of article produced, according to columns 8 and 12 (liters).	Annotations of the accountant.	Annotations of the supervising revenue officers.
1	2	3	4	5	6	7	8	9	10	11	12	13	14	15
				SAMPLE ENTRY. *Sec. I. Methylation with the common methylation substance.*										
1	1888. Feb. 17	559	52,104	Corresponding with columns 17 and 21 of the notification. ——, ch. tax controller, 17/2. ——, tax supervisor, 17/2.	1	1888. Feb. 20	250	94	23,500	Purposes of illumination.	.....	.....		
					2	Mar. 3	150	92	13,800	.....do	.....	.....		
					3	Mar. 5	300	92	27,600	.....do	.....	.....		
2	Mar. 5	532.5	49,256	Corresponding with columns 17 and 21 of the notification. ——, ch. tax controller, 5/3. ——, tax supervisor, 5/3.	4	Mar. 11	200	92	1,840	.....do	.....	.....		
Total of the receipt.		1091.5	101,360	.....	...	.....	900	.....	83,300	.....	.....	.....	Closed on Mar. 31, 1888. ——.	Examined and found correct Feb. 4, 1888. ——, ch. revenue controller.

Total of the withdrawal.		900	82,308											
Therefore on hand.		191.5	18,060											
				Sec. II. Methylation with 10 per cent sulphuric ether.										
											Kilos.			
1	Feb. 20	582		Corresponding with column 17 of the notification. ——, ch. tax controller, 20/2. ——, tax supervisor, 20/2.	1	Feb. 21	582			Fabrication of salicylic acid.	450	129	Columns 12 and 13 entered on Feb. 28, 1888. ——.	
2	Mar. 10	538		Corresponding with column 17 of the notification. ——, ch. tax controller, 10/3. ——, tax supervisor, 10/3.	2	Mar. 10	538				425	127	Columns 12 and 13 entered Mar. 16, 1888. ——.	
Total of receipt.		1,120					1,120						Closed on Mar. 31, 1888. ——.	Examined and found correct Feb. 4, 1888. ——, ch. revenue controller.
Total of withdrawal.		1,120												
Therefore on hand.														

APPENDIX R 4.

Settlement of account books regarding receipts and removals of methylated spirits of the (manufacturer, Mergel) at (Braunsberg) for the quarter (January 1–March 31, 1888).

INSTRUCTIONS.

Manufacturers who are allowed to have their spirits methylated for their own industrial use instead of with the general methylating substance with pyridine bases, turpentine, animal oil, or sulphuric ether, are bound upon the demand of the chief office to draw up a settlement of the account book kept of all receipts and removals of methylated spirits according to this model and to submit the same.

Sample entry.	I. Receipt of methylated spirits.			II. Removal of methylated spirits during the quarter-year (liters).	III. Amount of stock at the close of the quarter-year, column 3 less column 4 (liters).	Remarks.
	1. Balance brought forward from the previous quarter-year (liters).	2. Quantity of the methylated spirits produced in the quarter-year (liters).	3. Total from columns 1 and 2 (liters).			
	1	2	3	4	5	6
Sec. I. Methylation with the common substance of methylation	945	3,120	4,065	3,090	975	
Sec. II. Methylation with 10 per cent of sulphuric ether	85	830	935	935	.....	

MERGEL.

BRAUNSBERG, *March 31, 1888.*

APPENDIX R 5.

To the (Royal chief tax officer) at ———: The undersigned give ——— notice of the spirits described on the opposite page for methylation with water and vinegar.

(Signature.)

———, the —— day of ———.

The application has this day been received and entered upon the methylation register under No. ——.

(Signature.)
Royal Chief Tax Officer.

———, the —— day of ———.

INSTRUCTIONS.

1. The blank serves for the application for methylation of spirits to be made for vinegar manufacturers.

The first seven columns are to be filled by the applicant, the others by the revenue inspectors.

2. The revenue inspectors must satisfy themselves each time that the vessel in which the mixing of spirits with water and vinegar is to be undertaken is either empty or only filled with water.

3. To columns 4, 10, 11, and 12. In case the tare weight of the casks has not been ascertained by the gauge office, it is ascertained on the basis of the normal tare weights or by weighing the empty casks.

The revenue administration reserves the right to cause the empty casks to be weighed if there is any objection to the employment of the gauge office tare or to the normal tare rates.

4. To column 12. After the arrangement of the tables of weights and measures for spirits furnished for official use there is no need when applying the normal tare rate of specially ascertaining and stating the tare weight of the casks.

5. To column 17. The tax drawback is always calculated according to the amount of absolute alcohol ascertained at the inspection (column 17).

6. To columns 17, 18, 19, 20, 21. A fraction of a liter in column 17 is accounted as a whole liter in ascertaining the amount of the methylating substances.

Serial number.	I. Notification (report)— Of the vessels. Mark.	Number.	Branded tare (kilograms).	Of the spirits. Quantity (liters).	True alcoholic strength according to tralles (per cent).	Quantity of pure alcohol liters).	II. Findings of the revision— Of the vessels. Gross weight (kilograms).	Branded tare.	Established by weighing tare.	Net weight after deduction of— Tare, branded or established by weighing (kilograms).	Normal tare (kilograms).	Of the spirits. Apparent alcoholic strength according to tralles (per cent).	Grades of temperature according to Reaumur.	True alcoholic strength according to tralles (per cent).	Quantity (liters).	Quantity of pure alcohol (liters).	III. Methylation under revenue control— Of water there are to be admixed (liters).	From the liter quantity of water (column 18 the difference between the statements in columns 16 and 17 is to be subtracted (liters).	The quantity of spirits has consequently been mixed— With water (liters).	With vinegar (liters).	Remarks of the revenue officer, especially with reference to the methylation substance.
1		3	4	5	6	7	8	9	10	11	12	13	14	15	16	17	18	19	20	21	22
										Sample entry.											
1	RE.	158	.....	479	93	445.47	482.5	.....	.....	.....	400.5	91.5	+7	93	487	452.91	453	34	419	453	

——, the —— of ——, 18—.

——— ———,
Revenue Tax Supervisor.

——— ———,
Chief Revenue Controller.

APPENDIX R 6.

Instructions for the testing of vinegar admitted as a methylation agent.

For the purpose of testing the vinegar for its contents in acetic acid a solution of 1 gram of phthalein, furnished by the revenue authorities in 500 grams of spirits of at least 95 per cent tralles, is prepared, and an officially certified vinegar tester is procured. The vinegar tester is a cylindrical glass tube, closed below, and provided with a foot and having several graduated marks. The lowest mark indicates the upper limit of an internal volume of 20 cubic centimeters; above this mark there are 12 to 14 marks of division numbered in succession, each pair of which measure an internal volume of $1\frac{2}{3}$ cubic centimeters. The vinegar tester is filled up to the lowest graduation mark with the vinegar to be tested, 1, perhaps 2, drops of the phthalein solution are added, and finally so much double normal solution of soda is gradually added until the formerly colorless liquid shows a red color. If the level of the liquid lies above the graduation mark numbered 6, the vinegar contains more than 6 per cent of acetic acid; if the level lies above the graduation mark numbered 12, the vinegar has more than 12 per cent of acid.

APPENDIX R 7.

Register of the revenue office at ———, showing the methylation of spirits for the quarter ———.

[Contains —— folios, which have been fastened with a cord, the ends of which have been sealed hereon by the official seal. ——, the —— day of ———. ———.]

INSTRUCTIONS.

The register comprises all applications for the methylation of spirits within the district of the revenue office. Each applicant receives his own account in the register, which is divided into the requisite subdivisions in the case of those manufacturers that cause spirits to be methylated in several ways.

The entries in column 3 are made in accordance with the entries in column 17 of the application, under reservation of recalculation and if need be of correction.

The register is closed at the end of every quarter in all accounts, and respectively in their subdivisions, and is sent to the main office, together with the applications belonging thereto.

Serial number.	The application has been filed.		The spirits which have been methylated contain liter per cents of alcohol.	Remarks.
	Month.	Day.		
1	2		3	4

APPENDIX R 8.

Liquidation of the main (revenue) office at ——— on drawback of spirit tax for methylated spirits for the quarter ———.

INSTRUCTIONS.

According to this model the main office must every quarter draw up on the basis of the methylation register (Appendix R 7), and the applications belonging thereto, a liquidation concerning the tax drawback to be granted to the various applicants for whom spirits have been methylated, and must hand in the same to the directive authorities.

Serial number.	The applicant's—		Quantity of the spirits for which drawback of tax is to be allowed (alcohol liter per cents).	Computation of the drawback of tax according to the rate in force for the exportation of spirits.	Remarks.
	Name.	Residence.			
1	2	3	4	5	6
				M. Pf.	

APPENDIX S.

Regulations for the storage of spirits.

For the storage of domestic spirits subject to revenue control in public warehouses, or private warehouses standing under official joint closure, destined for goods on which no duty has been paid, or arranged exclusively for this purpose with the consent of the revenue authorities, the following ordinances are issued in execution of section 11 of the law of June 24, 1887, regarding the tax on spirits:

I. Storage in public warehouses intended for foreign goods on which no duty has been paid, or arranged exclusively for the storage of dutiable spirits.

SECTION 1. The storage of spirits in public warehouses is in general subject to the (suitable) application according to the sense of the provisions in section 97 to 106, inclusive, of the tariff union law of the 1st of July, 1869, and of the general warehouse regulation issued in addition thereto, together with the changes that will appear in the following sections.

(a) General provision.

SEC. 2. The taxable domestic spirits received in a public warehouse intended for goods on which no duty has been paid as a rule retain their quality as a domestic product. The reception of the spirits in such a warehouse, however, is permitted only in so far as either foreign spirits are not deposited there or a separate storage of the foreign dutiable and the domestic taxable spirits is possible.

Spirits which are stored in a public warehouse intended for goods on which no duty has been paid for the purpose of obtaining the drawback of the mash-vat or material tax thereby assume the quality of a foreign product on which no duty has been paid. Likewise the taxable spirits entering into such a warehouse assume the quality of a foreign product on which no duty has been paid in case they are mixed in the warehouse with foreign spirits therein deposited.

SEC. 3. Concerning spirits deposited in public warehouses, unless they assume the quality of a foreign product on which no duty has been paid in accordance with section 2, a storage register is kept according to Appendix S 1.

Appendix S 1.

(b) Application and admission for storage.

SEC. 4. The admission in a warehouse takes place by reason of application (Appendix H), or of extracts from such, or from shipment certificates, which are made out in duplicate according to Appendix S 2, by the depositor, and must be delivered to the office of the warehouse within the time to be locally fixed by the revenue authorities. If spirits are brought in for storage for which the consumption tax has been settled in advance in a binding manner according to section 13 of the law, the full amount of the duty resting on the spirits is to be stated in columns 7 or 8 of the application, and also to be written in columns 11 or 12 of the storage register.

Appendix S 2.

SEC. 5. For the purpose of admission into the warehouse, the quantity and alcoholic contents of the spirits are to be ascertained separately for each cask.

This ascertainment may be omitted:

1. If the ascertainment of quantity and alcoholic contents of the spirits, received under intact fastening of receiver or under official escort, has already taken place in a previous discharging office.

2. If the depositor, in the case of spirits discharged with Shipment Certificate I, without fastening of receiver or without official escort, renounces the right to discharge for exportation as well as employment free of duty for industrial purposes, and declares his willingness that the data given in the shipment certificate shall be used as the basis of the subsequent taxation.

3. If the ascertainment of quantity and alcoholic contents of the spirits at the place of deposit itself has already taken place officially for other reasons, and if at the same time the spirits have remained in the warehouse under official guard or custody up to the moment of their admission to the warehouse.

SEC. 6. In regard to the recording of the quantity and alcoholic contents of the spirits in the warehouse register, and in regard to the treatment of any observed departures

from the statement contained in the shipment certificate, the following principles are to be observed:

1. If the quantity and alcoholic contents are not ascertained before admission into the warehouse the data given in the shipment certificate (sec. 5, pars. 1 and 2) or the ascertainment which has taken place in the previous execution (sec. 5, par. 3) are to be recorded in the storage register.

2. If the examination made in the storage office shows an excess of percentages of liters as compared to the respective statement in the shipment certificate, the result of the inspection undertaken in the storage office is to be used in making entries in the storage register, not, however, barring a more accurate examination which is to be undertaken to detect any errors that may have occurred in the discharge.

3. If on the other hand there is found a deficit in percentages of liters, then the number of percentages of liters only which has been ascertained by the examination in the storage office is to be recorded in the storage register. However, if the spirits have arrived with injured official fastenings or if there is any suspicion of a clandestine removal of spirits, the consumption tax is to be levied on the quantity that is lacking, quite aside from the investigation which perhaps is to be instituted in regard to any defraudation of the consumption tax. If, however, the spirits have arrived with fastenings intact, and it is to be assumed at the same time that the deficit has arisen solely from natural causes, no consumption tax is to be levied thereon.

(c) Storage and treatment in the warehouse.

SEC. 7. In order to supplement and fill up the dutiable spirits it is lawful to bring spirits from the free commerce into the warehouse. This, however, must previously be reported in writing to the storage office, stating the amount in percentages of liters, and thereupon the storage office shall ascertain the spirits before admission into the storage room, according to weights and percentages of liters, and shall enter it under the dutiable storage material both in the warehouse register and in the warehouse certificate. There is no need of weighing or alcoholizing the cask to be filled up before and after filling.

SEC. 8. If, in consequence of repacking, which must every time be reported to the office in writing beforehand, according to Appendix S3, or according to the blanks prescribed for notice for withdrawal (sec. 10), spirits subject to various rates of the consumption tax are mixed together, then the whole quantity resulting from the mixture is thereafter subject to the highest rates of the consumption tax in question.

Appendix S3.

If, in consequence of repacking, spirits on which the mash-vat or material tax has been levied are mixed with spirits on which no such tax has been levied, then the whole quantity resulting from the mixture is once more recorded as spirits for which the mash-vat or material tax has not been levied.

Discrepancies in the amount of the percentages of liters observed in the repacking must be explained at once.

If the deficit has arisen solely from repacking, or by accidental occurrences, or by shrinkage, evaporation, or ordinary leakage, and has not been produced in contravention of ordinances, such deficit may be deducted as free from duty.

In other cases the lawful consumption tax is to be levied on the amount lacking, under reservation of the criminal prosecution to be instituted if there is suspicion that the lacking amount is due to clandestine removal of a part of the spirits from the warehouse.

SEC. 9. The impurities secreted from dutiable spirits and also spoiled spirits, or such as have acquired a property under which they are not subject to the consumption tax, may be exported abroad under revenue control or with the permission of the head of the office (in branch offices with the permission of the chief inspector of the district), and upon application of the depositor they may be destroyed after official notice has been taken of them for this purpose.

In the latter case the release from duty may take place only after previous authorization of the main office, to which the records on the case are to be submitted.

(d) Notice of withdrawal and discharge from the warehouse.

SEC. 10. The notice of withdrawal prescribed in section 30 of the general regulations for warehouses, in case dutiable spirits are to be withdrawn from the warehouse, is to be submitted to the warehouse office according to Appendix S4.

Appendix S4.

If the notice of withdrawal takes place for the purpose of transfer to the account of an industrial establishment which refines domestic spirits subject to revenue control or subjects it to further treatment for the purpose of exportation, then the notice of withdrawal is to be submitted in duplicate. (See Appendix T, sec. 9.)

If the spirits are intended for further shipment with shipment certificates, then the form prescribed in the respective regulations is to be used. (Compare executive provision to sec. 11 of the law under III *a*.)

If the depositor desires that the discharge from the warehouse be based on the amount of liter percentages existing at the moment of removal from the warehouse, then he must so expressly state in his application.

SEC. 11. By reason of the notice of withdrawal for payment of duty, for untaxed discharge for industrial purposes (sec. 1, par. 4, No. 2 of the law), or for shipment on Shipment Certificate II, the ascertainment of the quantity and alcoholic content of the spirits takes place in the manner prescribed in section 5, paragraph 1.

SEC. 12. In regard to the amount of liter percentages to be used as the basis of taxation or of discharge on Shipment Certificate II, the following principles are to be applied:

1. The second ascertainment (sec. 11) may be omitted if the depositor has not applied in column 14 of the notice of withdrawal for discharge according to the amount of liter percentages present at the moment of withdrawal, and if at the same time there exists no suspicion of a clandestine removal of parts of the spirits during storage.

2. If a second ascertainment takes place (sec. 11), and if this shows (1) a deficit of percentages of liters as compared

to the amount present on admission for storage, the discharge takes place on the basis of the amount present at the moment of removal, if it is to be assumed that this deficit has arisen solely from natural causes. If, however, there exists a well-founded suspicion that part of the spirits has been clandestinely removed from the storage, then the discharge is always to be based on the amount present on admission, aside from the investigation to be instituted in regard to any defrandation of the consumption tax.

If there is found (2) an excess in liter percentages, then the amount present at the removal also forms the basis of the discharge—aside from the more accurate investigation in regard to any errors that may have occurred.

In both cases, upon application of the persons concerned, every package of a larger item of spirits the quantity of which when admitted had been specially ascertained at the time and been recorded in the warehouse register is to be treated in regard to discrepancies on notice for withdrawal as a separate item for itself, if there exists no doubt regarding the identity of the various packages in mark and number.

SEC. 13. For the purpose of shipping dutiable spirits from the warehouse on Shipment Certificate I, the quantity discharged from storage is always ascertained according to percentages of liters.

If in this ascertainment discrepancies are found as compared to the quantity admitted to storage, the officer shall in general proceed according to the rule of section 12, under *b*, with the proviso, however, that on a deficit, which according to that rule is dutiable, duty must be paid at once, and that the quantity removed from storage is to be made the basis of the execution of the shipment certificate.

(*e*) Storage without keeping up the identity of the various items.

SEC. 14. In case special tanks, etc., are set up in the public warehouses in which the dutiable spirits are stored without keeping up the identity of the various items, then those warehouses shall be subject to a proper application of the regulations given farther on for divided storage. One and the same tank, etc., however, must receive for storage such quantities of spirits only as belong to the same depositor.

II. Storage in private warehouses intended exclusively for the storage of dutiable spirits under joint official fastening.

SEC. 15. The private warehouses intended exclusively for the storage of dutiable spirits under official joint fastening are subject to the appropriate application of the above regulation and the schedule provisions for private transit depositories (including part depositories and wine depositories) unless different provisions are made in the following section.

SEC. 16. Private depositories as a rule are allowed only at the headquarters of a tariff or revenue office having two officials.

Private warehouses are granted only to manufacturers who keep mercantile books in regular order, and who enjoy the confidence of the administration, and either live themselves at the place of storage or appoint a suitable representative resident there and furnish him with the appropriate authority.

It shall be lawful, however, to grant private warehouses

to owners of distilleries for dutiable domestic spirits at the place of production thereof even if they neither keep mercantile books nor a custom or a revenue office is at the place. As a rule the depositories shall not receive any other but such spirits as have been produced in the distillery of the owner of the warehouse.

The directive authorities shall decide concerning the granting of private depositories, which is subject to repeal at any time, and is to be made only in case of need.

SEC. 17. For every private depository for domestic spirits except divided depositories (sec. 19, etc.) an account is opened in the storage register (sec. 3) at the office.

SEC. 18. The revenue administration shall at any time be free to inspect the warehouse. The keeper of the ware house, or an authorized representative of him, is to be present at the inspection and is obliged on demand to declare the stock of the warehouse and also to take the measures requisite for the inspection according to the instruction given by the inspecting official and to cause the necessary manual assistance to be given at his own expense and risk.

In particular, gauged scales and weights, sufficient for the depository, as well as the gauged utensils requisite for the ascertaining of the alcoholic contents of the spirits, must be placed at the disposal of the inspector.

At what time and to what extent the inspections of the depositories are to take place is determined by the directive authorities.

The applications for the opening of the private depositories subject to official joint closure are to be complied with as soon as the official force on hand will permit.

The time and duration of the opening are determined by the office according to the necessities of the case for the various depositories.

For the official watching of the depositories during the time in which they are open it shall be lawful to impose a tax on the owners of the depositories, which, however, must not exceed the amount of 3 marks per day and per official.

This tax just mentioned for the official guarding of depositories designated in section 16, paragraph 3, during their opening is not to be levied if the opening of the depository takes place merely in order to receive spirits into the private depository in direct pursuance of the ascertainment prescribed in section 11, paragraph 1, of the law, or if it is otherwise possible to provide for such guarding incidentally to the presence of the revenue officers for the purpose of other official functions. On the contrary, if the owner of a depository demands that the depository be opened at another time, he has to pay not only the tax above mentioned, but also the lawful traveling expenses and living expenses.

If the guarding of a private depository for dutiable spirits, owing to the extent of the discharges that have to take place therein, requires the employment of one or more special revenue officers destined for those services, then the owner of the depository in place of the above-mentioned

tax has to pay a contribution to the cost of administration to the amount of the average salary of the officials.

(b) Special provisions for the divided depository.

(1) Condition.

SEC. 19. In divided depositories the keeping up of the identity of the various packages does not take place. In the case of these (1) separate rooms of the public depository, if such rooms exist, admitting of being locked by themselves are allowable, and their arrangement and maintenance have to be cared for by the depositor under instructions of the office; (2) private rooms are allowed.

The granting of such a divided depository is joined with the condition that the regular stock in storage or the annual discharge shall exceed the amount of 300 hectoliters of pure alcohol. This provision, however, does not apply to those divided depositories of spirits that are kept in public warehouses.

On the storage casks, tanks, etc., set up in the divided depositories for the storage of spirits, the number of the vessel and the contents in liters thereof must be distinctly marked in oil colors on the basis of the official measurement, and every vessel must furthermore be provided with a gauge glass with scale or some other device which permits the state of the liquid contained in the vessel to be recognized.

In the case of larger free standing vessels, stopcocks are to be fitted upon them by the order of the chief inspector of the district at various heights which allow the taking of samples from different layers of the vessel.

(2) Rate of taxation.

SEC. 20. The provisions enacted in section 8 for the mixing of spirits subject to different rates of duty do not apply to the items of spirits stored in divided depositories.

(3) Keeping of the register.

Appendix S 5.

SEC. 21. The entry and the discharge in the storage register, which is to be kept in sections of a year according to Appendix S 5, takes place according to the percentages of liters, the ascertaining of which is to take place according to the provision regarding the discharge of spirits for exportation against drawback of duty.

If in the putting into or removal from storage of the spirits a refilling takes place from the shipment casks into special storage casks, tanks, or vice versa, then the net weight of the spirits requisite in the calculation in the liter percentages is to be ascertained by weighing the shipment cask before and after refilling and by deducting the weight of the empty cask from the weight of the full cask.

In the case of larger free standing vessels, by the order of the chief inspector of the district, stopcocks are to be fitted upon them at various heights, which allow the taking of samples from different layers of the vessel.

(4) Opening, working, and division.

SEC. 22. So long as the depository is open, access thereto is continuously kept under official supervision. The officials charged with this supervision are authorized to enter into the storage rooms at any time and to inspection them.

The keeper of the depository is free to repack and divide stored spirits without any limitation.

(5) Taking of samples.

SEC. 23. The taking of samples may be permitted without previous application to the office by the officials charged with the guarding of the depository. For this purpose an

official note register is to be kept in the depository in which all the samples taken are to be entered according to net weight, apparent alcoholic strength, and temperature of the spirits by the owner of the depository or his representative. The correctness of each entry is to be certified by the inspecting official and the storage register is to be corrected at appropriate intervals corresponding to the entries in the note register after previous payment of the consumption tax.

(6) Discharge on notice of withdrawal.

SEC. 24. For notice of withdrawal from the depositories the directive authority shall be free to prescribe minimum limits.

In filing the notice of withdrawal the depositor must always state at what rate of tax the spirits to be withdrawn are to be marked as discharged in the storage register.

Pursuant to this statement the discharge is to be effected so far as there still exist in the depository spirits subject to the declared rate of taxation according to the condition of the account in question. If this is not the case the depositor must apply for a corresponding correction in the notice of withdrawal.

(7) Remission of tax for spoiled or wasted spirits.

SEC. 25. Impurities, as well as such quantities of spirits as have been spoiled or rendered useless in the divided depository, shall be discharged from the account free from tax, the spirits having been previously destroyed under official inspection, if necessary.

If accidents—for example, the bursting of casks—have caused a loss in the stored spirit, the owner of the depository must notify the office thereof at once, and thereupon the office shall cause the amount lost to be officially ascertained discharged from the account free of duty. If the depository contains spirits subject to different rates of tax, and if the rate of tax to which the spirits to be discharged are subject can not be ascertained, then the discharge free of duty shall take place with that quantity of spirits present according to the account on which the highest rate of duty rests.

If the depository contains such spirits for which the mash vat or material tax has been paid, and such spirits for which that tax has not been paid, then the discharge, according to the preceding ordinances, takes place for those spirits for which the mash vat or material tax has not been paid.

(8) Inspection of the stock of the depository.

SEC. 26. The divided depository is to be officially inspected at least once a year, under the direction of a superior officer, at a time to be fixed by the main office, for which purpose the owner of the depository must make a declaration of the stock thereof, according to Appendix S 6. The inventory is to be based upon the capacity (according to the contents in volume) and the true alcoholic strength, and from this the stock is to be calculated in percentages of liters.

Appendix S 6.

Deficiency.

If the official inventory discloses a deficiency, it is left unregarded if on the basis of the official inquiry it is to be assumed that the deficiency is due to losses produced by refilling, by accidental events, by shrinkage, by evaporation, or by ordinary leakage.

The protocol regarding the inventorying of the stock

of the depository is to be submitted to the directive authorities.

In taxing a dutiable deficiency the calculation of the consumption tax, in case the tax rate to which the deficiency of spirits is subject can not be ascertained, and if the depository contains spirits subject to different rates of tax, is to be made according to the lowest rate of tax to which the spirits on deposit are subject.

After the taking of an inventory, the account of the depository is to be brought into agreement with the state of the deposit by adding or subtracting any differences found. Any excess is added to the spirits subject to the lowest rate of duty, and if according to the account there are present any spirits for which the mash vat or material tax has been paid the excess is added to those. The deduction of deficiency takes place according to the provisions given in section 25, paragraphs 2 and 3.

III. Penalties. SEC. 27. Violations of the provisions of these regulations so far as the penalties of section 21 to 25 of the law of June 24, 1887, regarding the taxation of spirits do not find application shall be punished with a fine up to 300 marks, according to section 26, ibid.

APPENDIX S 6.

[Warehouse accounts. Folio ——. Filed the —— day of ——.]

Declaration of the stock in domestic spirits subject to the consumption tax in the divided depository of ——— at ———.

Serial number.	Of the packages.		Of the quantity of the spirits in liter per cents.	Remarks.
	Number and kind.	Single capacity (liters).		
1	2	3	4	5
Date and signature of the depositor.				Date and signature of the revising officers.

APPENDIX T.

Regulations for industrial establishments in which spirits subject to revenue control may be rectified.

[Sec. 11, par. 3, of the law of June 24, 1887, relating to the tax on spirits.]

In accordance with section 11, paragraph 3, of the law of June 24, 1887, relating to the tax on spirits the following regulations are issued regarding the treatment of such industrial establishments as claim the privilege of being allowed to rectify spirits, subject to revenue control, outside of the storage rooms to be kept under official closure:

I. Conditions for granting the privilege.

SECTION 1. The granting of the privilege, which is subject to repeal at any time, is accorded only to such industrial establishments which produce at least 5,000 hectoliters of pure alcohol per year and are located at the seat of a customs or revenue office provided with at least two officials.

I. a. Special condition.

One condition of the granting of a privilege is that the owner of the industrial establishment shall keep regular mercantile books, shall enjoy the confidence of the administration, and shall either himself live at the place of the industrial establishment or shall appoint a suitable representative resident there.

The granting of the privilege is to be applied for in writing, addressed to the main revenue or main customs office of the district, accompanied by an accurate drawing of the rectifying apparatuses in which the tubing for raw alcohol, for spirit of wine, for alcoholic vapors, water, and water vapors are to be differently marked, together with the description of the course of manufacture and a plat of the industrial establishment.

I. b. Application.

The granting of the application is subject to the decision of the directive authorities.

Industrial establishments in operation before October 1,

APPEN

Warehouse register for domestic spirits subject to consumption tax at ———, 18—, and ending the

[This register contains —— folios, which have been fastened by a cord sealed hereon

[Account of ———.]

Entry.													
Serial number.	Date of entry.	Denomination of the number in the previous register.	Denomination of the storage room.	Of the packages.			Quantity of spirits (a) according to the findings obtained by the previous office of discharge; (b) according to the findings of this office.			Statement—			
				Number and kind of packing.	Marks.	Numbers.	Weight.		Liter per cents.	Of the rate of consumption tax (a) according to sec. 1 of the law of June 24, 1887; (b) addition according to sec. 42, ibid.; for 1 liter of pure alcohol, and that for spirits which to the mash-tub tax or material tax—		Whether any and what kind of fastening is found on the package.	How long the spirits have already been stored in public warehouses.
							Gross (kilograms).	Net (kilograms).		Have been subjected.	Have not been subjected.		
1	2	3	4	5	6	7	8	9	10	11	12	13	14

: S 1.

——— office in ———, for the period commencing the —— day of – day of ———, 18—.

ie ends by the official seal. Kept by ———. ——— this —— day of ———, 18—.]

[Account of ———.]

Cancellation.										
	Of the packages.			Quantity of the spirits—			Further reference of the spirits.			
ite of ncel-tion.	Number and kind of the packing.	Marks.	Numbers.	According to the weight at the removal from storage.		According to liter per cents.	Denomination of the register.	Its folio.	Its number.	Remarks.
				Gross (kilograms).	Net (kilograms).					
15	16	17	18	19	20	21	22	23	24	25

APPEN

[Notification register of consumption tax. Receipt register of

bstract from the ——— of the ——— office at ———, No. ———, of the tion tax, therewith received by ——— for the sake

I. Contents { of the notification. of the bill of lading for the spirits.										II. Suggestions and remarks of the disposer.
Number of the single posts (items).	Of the packages.		Quantity of the spirits—			Statement—				
	Number and kind of packing.	Marks and numbers.	According to weight.		According to liter percents.	Of the rate of the consumption tax (a) according to sec. 1 of the law of June 24, 1887; (b) addition according to sec. 42 ibid., for 1 liter of pure alcohol, and that for spirits, which to the mash-tub or material tax—		Whether, and how, and by what office a fastening has been affixed, and the number of the seals, lead seals, etc., affixed.	How long the spirits have already been stored in public warehouses.	
			Gross (kilograms).	Net (kilograms).		Have been subjected (pfennigs).	Have not been subjected (pfennigs).			
1	2	3	4	5	6	7	8	9	10	11
Date and signature of the notice given.										
Identical with { the notification. the bill of lading for the spirits.										

S 2.

lading for spirits. Folio ——. No. ——. Filed the —— day of ———.]

day of ———, relating to the domestic spirits, subject to consump-
porting the same for paying the tax and storage.

		III. Findings of the revision.						IV. Calculation of dues (a) according to sec. 1 of the law of June 24, 1887; (b) addition according to sec. 42 ibid.		V. Further reference of the spirits.			
the ages.				Of the spirits.									
Marks and numbers.	Statement of the fastening and number of seals, lead seals, etc., found.	Quantity of spirits according to weight.		Apparent alcoholic strength, in percents, according to Tralles.	Grades of temperature according to Reaumur over (+) or below (—) zero.	True alcoholic strength, in percents, according to Tralles.	Quantity, in liter percents.	Rate of consumption tax for 1 liter of pure alcohol.	Amount of dues.	Denomination of the register.	Its folio.	Its number.	Remarks over fastening retained or affixed, number of seals, lead seals, etc.
		Gross (kilograms).	Net (kilograms).										
13	14	15	16	17	18	19	20	21	22	23	24	25	26
								Pf.	*M. Pf.*				

APPEN

[Filed —— the —— day of ——.

Application for repacking of domestic

I. Statements made by the depositor.

Of the warehouse register.				Of the packages.		Quantity of the spirits—			Statement—				
						According to weight.							
Account.	Folio.	Number.	Number of the single posts.	Number and mode of packing.	Marks and numbers.	Gross (kilograms).	Net (kilograms).	According to liter per cents.	Of the rate of the consumption-tax (a) according to sec. 1 of the law of June 24, 1887; (b) addition according to sec. 42. ibid.; for 1 liter of pure alcohol and that for spirits which to the mash-tub tax or material tax— Have been subjected.	Have not been subjected.	Whether and how and by which office the fastening has been affixed, and of the number of the seals, lead seals, etc., affixed.	How long the spirits have already been deposited in public warehouses.	Suggestions and remarks made by the depositor.
1	2	3	4	5	6	7	8	9	10	11	12	13	14
Date and signature of the depositor.													

.

is taken by ——.]

ubject to consumption tax.

II. Changes that have occurred in consequence of repacking.

the ges.		Quantity of spirits according to weight.		Of the spirits.				Rate of consumption-tax for one liter of pure alcohol (a) according to sec. 1 of the law of June 24, 1887; (b) addition according to sec. 42, ibid., and that for spirits which to the mash-tub tax or material tax—		
Marks and numbers.	Statement concerning the fastening and the number of seals, lead seals, etc., found.	Gross (kilograms).	Net (kilograms).	Apparent strength of alcohol, in per cents, according to Tralles.	Grades of temperature according to Reaumur above (+) or below (—) zero.	True strength of alcohol, in per cents, according to Tralles.	Quantity in liter per cents.	Have been subjected.	Have not been subjected.	Remarks.
17	18	19	20	21	22	23	24	25	26	27
and signature of the ising officer.										

APPEN

[Filed the ——

Application for removal of domestic spirits subject to consumption tax from ing of taxes or duties, and draining or racking for the

I. Statement made by the withdrawer, according to the contents of the warehouse certificate.													II. Suggestions and remarks made by the withdrawer.
Register of the warehouse.			Date of deposition.	Of the packages.		Quantity of the spirits at the time of deposition—			Statement—				
						According to weight.		According to percentage per liter.	Of the rate of consumption tax (a) according to sec. 1 of the law of June 24, 1887; (b) addition according to sec. 42 ibid., for 1 liter of pure alcohol, and that for spirits which to the mash-tub tax or material tax—		Whether, and how, and by which office the fastening has been affixed, and of the number of seals, lead seals, etc., affixed.	How long the spirit has already been deposited in the public warehouses.	
Account.	Folio.	Number.		Number and mode of packing.	Marks and numbers.	Gross (kilograms).	Net (kilograms).		Have been subjected.	Have not been subjected.			
1	2	3	4	5	6	7	8	9	10	11	12	13	14
									Pf.	*Pf.*			
				Date and signature of the depositor.									
	Identical with the warehouse register.												

r private warehouse of the ——— office, at ———, for pay-
rectification and further manipulation.

III. Findings of the inspection.							IV. Computation of dues.		V. Further reference of the alcohol.			
ement cern- the ening l the ber of , lead , etc., nd.	Quantity of the spirits according to the weight at the removal from storage.		Of the spirits.				Rate of consumption tax for one liter of pure alcohol.	Amount of dues.	Denomination of the register.	Its folio.	Its number.	Remarks concerning the fastening retained or applied, the number of seals, lead seals, etc.
	Gross (kilograms).	Net (kilograms).	Apparent strength of alcohol, in per cents, according to Tralles.	Grades of temperature, according to Reaumur above (+) or below (—) zero.	True strength of alcohol, in per cents, according to Tralles.	Quantity in per cents of 1 liter.	(a) According to sec. 1 of the law of June 24, 1887; (b) addition according to sec. 42, ibid.					
17	18	19	20	21	22	23	24	25	26	27	28	29
							M.	*M. Pf.*				
ature cting												

APPEN

District warehouse register of divided depositories for domestic alcohol from the —— day of ———

[This register contains —— folios, which have been fastened together by a cord covered

A. Entry.

[Account of ———.]

Serial number.	Date of admission.	Previous register.			Quantity of spirits in liter per cents at the rate of the consumption tax (*a*) according to sec. 1 of the law of June 24, 1887; (*b*) addition according to sec. 42 ibid.															
		Denomination (title).	Folio.	Number.	*a* 50 *b* —	*a* 50 *b* 02	*a* 50 *b* 04	*a* 70 *b* —	*a* 70 *b* 02	*a* 70 *b* 04	*a* 50 *b* 12	*a* 50 *b* 14	*a* 50 *b* 16	*a* 50 *b* 18	*a* 50 *b* 20	*a* 70 *b* 12	*a* 70 *b* 14	*a* 70 *b* 16	*a* 70 *b* 18	*a* 70 *b* 20
					Pfennigs for one liter of pure alcohol, and that for spirits which to the mash-tub tax or material tax—															
					Have been subjected.						Have not been subjected.									
1	2	3	4	5	6	7	8	9	10	11	12	13	14	15	16	17	18	19	20	21

S 5.

ject to consumption tax, at the ——— office in ——— for the time the ——— day of ———.

the official seal at the ends thereof. Kept by ———. ———, the ——— day of ———.]

B. Cancellation (writing off).

[Account of ———.]

Date of discharge.	Register wherein further reference of the spirits is made.			Quantity of spirits in liter per cents at the rate of the consumption tax (*a*) according to sec. 1 of the law of June 24, 1887; (*b*) addition according to sec. 42 ibid.																Remarks.
				a 50 *b* —	*a* 50 *b* 02	*a* 50 *b* 04	*a* 70 *b* —	*a* 70 *b* 02	*a* 70 *b* 04	*a* 50 *b* 12	*a* 50 *b* 14	*a* 50 *b* 16	*a* 50 *b* 18	*a* 50 *b* 20	*a* 70 *b* 12	*a* 70 *b* 14	*a* 70 *b* 16	*a* 70 *b* 18	*a* 70 *b* 20	
				Pfennigs for one liter of pure alcohol, and that for spirits which to the mash-tub tax or material tax—																
				Have been subjected.						Have not been subjected.										
23	24	25	26	27	28	29	30	31	32	33	34	35	36	37	38	39	40	41	42	43
	Denomination (title).	Folio.	Number.																	

1887, may also be granted the privilege even when they work up less than 5,000 hectoliters of pure alcohol per year.

II. Security and liability for the consumption tax.

SEC. 2. For the consumption tax on the spirits that are rectified security is to be demanded according to the regulations existing for the granting of tax credit, and the owner of the industrial establishment is responsible for the consumption tax so long as the obligation to pay the same does not pass over to other persons incurring this obligation or so long as the spirits are not discharged as free from tax.

III. Ordinances regarding the operation and supervision.

Appendix T 1.

SEC. 3. The owner of the industrial establishment is obliged to submit in duplicate, at least two weeks before the beginning of the privilege granted, to the revenue office of his place of residence, according to Appendix T 1, a description of the rooms and utensils in which the spirits to be rectified are kept before, during, and after rectification, and in this description an accurate statement has to be made of the capacity, expressed in liters, of each of the vessels serving for the receiving of the spirits.

These statements are subject to verification by the revenue administration; in particular, the liter capacity of the vessel serving for the reception of spirits is to be ascertained and protocolled by dry, or, if necessary, by wet, measurement in the presence of the owner or of an authorized representative of the industrial establishment. One copy each of the drawing mentioned in section 1, paragraph 3, of the description of the operations of manufacture as well as of the ground plat, in which the position of the apparatus must be marked, and furthermore of the report of rooms and utensils designated in this section and of the transactions of the measurements thence resulting, all united into a brochure, must be kept at a place accessible at any time to the inspecting officer in the industrial establishment, according to detailed instruction from the chief inspector of the district.

Furthermore, if any changes in the course of manufacture are introduced or if new rooms for operation are to be established, or new vessels for spirits to be set up or the existing ones are to be abolished, changed, or transferred to another locality, the owner of the industrial establishment must give notice of the change at least three days before its occurrence to the revenue office. Concerning the detailed execution of these provisions, especially in regard to the keeping of the inventories at the revenue office, the provisions relating to the keeping of the distillery inventories find application.

The vessels for the reception of spirits are to be provided with numbers, and the number as well as the ascertained capacity in liters are to be distinctly marked, either with oil paints on the vessel itself or by means of a label near by. This marking must always be kept intact.

The receiving vessels (vats, tanks, etc.) are to be provided with a gauge and a scale, or some other device which allows the contents of the vessels to be always observed even if they are but partly filled. These devices are to be tested officially and are to be secured against any changes

just as the receiving vessels are. The measures for security applied must be especially described in the minutes of the measurement.

Every receiving vessel standing free must, by the order of the chief inspector of the district, be provided with the requisite number of spigots in different heights and at different places of the vessel for the purpose of obtaining an average sample of the spirits therein contained.

SEC. 4. Concerning the various acts of operation undertaken in the establishment for the purpose of refining and rectifying the spirits, and especially concerning the receipts in raw spirits for refining, concerning the dilution of the same with water, the transfer thereof into refining filters, rectifying apparatuses, etc., as well as concerning the regaining of refined spirits and fusel, the waste of fusel oil and the like, it is requisite that besides the factory books proper an operation book shall be kept, which must be brought up appropriately to date and must be prescribed by the main office; it must always be kept ready and submitted at any time to the inspection of the chief officers of the revenue administration. This book is to be kept at a stated place prescribed by the chief inspector of the district.

Furthermore, the chief officials of the revenue administration have the right to inspect the storage factory and sale books proper of the industrial establishment at any time during business hours.

SEC. 5. While work is going on in the industrial establishment the officers of the revenue administration are free at any time to enter for the purpose of inspection, and the entrance must be opened to them on demand without delay.

SEC. 6. The owner of the industrial establishment is obliged, at his own expense, to provide, at a place to be prescribed by the chief inspector of the district, a suitable room for revenue discharges, which shall be duly protected against the influences of the weather and shall be fitted out with the utensils and materials requisite for the purpose of the discharges, within the prescribed limits, and he shall take care that this room be heated and lighted, and he shall provide the gauged scales, weights, and instruments of inspection and measurement requisite, according to the demand of the revenue authorities, for the discharges. The owner of the industrial establishment is furthermore obliged to furnish to the officers of the revenue administration such assistance, or cause it to be furnished, as is requisite for the inspections and discharges.

IV. Discharge for entry or removal.

SEC. 7. The applications of the owner or authorized representative of the industrial establishment for the performance of revenue discharge of spirits to be entered or removed is to be complied with as promptly as possible, according to the official force on hand. For officials who are sent to the industrial establishments for the purpose of discharge it shall be lawful to demand a fee, which, however, must not exceed the amount of 3 marks per day per officer.

If, for the purpose of performing these discharges, it is required that special officers be appointed, the owner of the

industrial establishment shall be bound to pay, in place of those fees, a contribution to the costs of administration amounting to the average income of the officers to be appointed.

SEC. 8. Concerning the spirits that are rectified, an account register is to be kept according to Appendix T 2. Appendix T 2.

SEC. 9. The spirits brought to the industrial establishment must be manifested on entrance by means of an entrance report, to be filed in duplicate in the manner of the deposit report. In entrance from a depository of the same place the notice of withdrawal from the depository, to be filed in duplicate, is to serve as report. The spirits thereupon, as a rule, are to be subjected to special official inspection, including the ascertaining of the percentages of liters. This inspection may be omitted:

1. If the ascertaining of the quantity and alcoholic contents of the spirits received under intact fastening of the receiver or under official escort has already taken place at a previous discharging office.

2. If the ascertaining of the quantity and alcoholic contents of the spirits has already taken place in the office itself for another reason and if at the same time the spirits have remained under official guard or custody up to the time of reception on the part of the rectifying establishment.

In both cases, however, the rectifying establishments must certify on the report that it waives the performance of the inspection and agrees to having the results of the former examinations used as the basis of entry in the account register.

After the spirits have been received on the part of the rectifying establishment which has to acknowledge the receipt on the report of admission, the spirits are entered as admitted in the account register.

If spirits are to be removed from the industrial establishment, either by being exported under shipment certificate control or by being conveyed to a depository or into free commerce, this must in every case be previously declared to the revenue office by means of a withdrawal notice in the manner of the withdrawal notices from the depository.

Thereupon in all cases the revenue discharge of the spirits reported for withdrawal takes place under special inspection and ascertainment of the liter percentages. On the basis thereof the discharge is made in the account register and any consumption tax is paid.

V. Record of the establishment. Taking of inventory.

SEC. 10. Twice a year, in June and December, unless the directive authorities out of regard for the conditions of operations of the industrial establishment should allow different periods, an official inventory is taken of the spirits present in the industrial establishments and entered for rectification. This must be done on a day to be fixed by the revenue authorities eight days in advance. The owner of the industrial establishment is obliged to arrange the operations thereof in such way that on the day fixed the official taking of stock shall be made possible without undue difficulties. In particular, he is to take care that the spirits on hand shall be concentrated as much as pos-

sible by filling the collecting vessels (tanks, vats, etc.) as full as possible, and thereby simplifying and assuring the taking of stock.

For the purpose of this taking of stock, the owner or authorized representative of the establishment must present to the revenue office a declaration of stock, according to Appendix T 3, at latest on the day before the date fixed.

Appendix T 3.

SEC. 11. In taking stock, which must be done by two officials, one of whom shall be a chief official, the amount and strength of the spirits on hand are to be ascertained. If a deficit is found, then in the case of the first taking of stock this deficit may be discharged as free of duty up to the amount of 1 per cent of the spirits entered since the time when the privilege became operative, and in the case of subsequent taking of stock it may be discharged free of duty up to 1 per cent of the last amount of spirits entered since the last taking of stock; but a deficit in liter percentages exceeding that amount is to be taxed.

VI. Validity of the regulations for divided storage.

SEC. 12. Concerning the entry and discharge of spirits and the taking of stock thereof for the rest, the regulations issued concerning this for the divided storage of (untaxed) spirits on which the tax has not been paid shall find appropriate application.

VII. Penalties.

SEC. 13. Violations of the provisions of these regulations, unless subject to the penalties on account of defraudation of consumption tax, shall be punished with (law and order penalties) fines, according to section 26 of the law of June 24, 1887, concerning the taxing of spirits.

APPENDIX T 1.

[District of the revenue collection office. Collection district No. —— of the inventory. No. —— of the vouchers.]

Notice as to rooms and appliances connected with the establishment for rectifying spirits of ——— at ———, No. ——— ——— street.

INSTRUCTIONS FOR THE OWNER OF THE ESTABLISHMENT.

1. This report is to be submitted in duplicate by the owner of the industrial establishment to the revenue office of his place of residence—

(*a*) If the industrial establishment has been granted the privilege of rectifying spirits subject to revenue control outside of the storage room; and if use is to be made of such privilege; or

(*b*) If the previous report has in any way become indistinct.

2. All the rooms belonging to the industrial establishment in which spirits are kept and rectified and the utensils present in these rooms which serve to hold or to rectify the spirits are to be entered in the report.

3. Every room and every utensil is to be noted separately.

4. The owner of the industrial establishment is to fill only the first three columns on the page, and is to execute his entry at the close, stating the day and signing his name.

5. This report is to be kept in the industrial establishment with care and protected against dirt and injury according to detailed instruction by the chief inspector.

6. Additions and changes in the report shall be reported to the revenue office by means of duplicate notices of changes for which the blanks shall be furnished by the revenue office.

7. A new report is to be handed to the revenue collection office in duplicate whenever the chief inspector demands it.

Serial number.	Report as to rooms and their situation.

The apparatus.			Received and removed.				Remarks.
			Reception.		Removal.		
Denomination.	Number.	Capacity (liters).	Day of it.	Certificate of correctness on part of the recording officer.	Day of it.	Certificate of correctness on part of the recording officer.	
1	2	3	4	5	6	7	8

APPEN

Register of accounts over the domestic spirits, subject to the consumption the fiscal

[The register contains —— folios, which are fastened together with a cord, the ends of which are

A. Entry.

[Account of ——.]

Serial number.	Date of reception.	The previous register.			Quantity of spirits in liter percents at the rate of the consumption tax (*a*) according to sec. 1 of the law of June 24, 1887; (*b*) addition according to sec. 42 ibid.															
					a 50 *b* —	*a* 50 *b* 02	*a* 50 *b* 04	*a* 70 *b* —	*a* 70 *b* 02	*a* 70 *b* 04	*a* 50 *b* 12	*a* 50 *b* 14	*a* 50 *b* 16	*a* 50 *b* 18	*a* 50 *b* 20	*a* 70 *b* 12	*a* 70 *b* 14	*a* 70 *b* 16	*a* 70 *b* 18	*a* 70 *b* 20
		Denomination (title).	Folio.	Number.	Pfennigs for 1 liter of pure alcohol, and that for spirits, for which the mash-tub tax or material tax—															
					Has been paid.						Has not been paid.									
1	2	3	4	5	6	7	8	9	10	11	12	13	14	15	16	17	18	19	20	21

DIX T 2.

tax, which are to be rectified (purified) at the ——— office at ———, for year 1888.

sealed hereon with the official seal. ———, the —— day of ———, 188—. Kept by ———.]

B. Cancellation (writing off).

[Account of ———.]

Serial number.	Date of removal.	The registers, in which the spirits are further referred to.			Quantity of spirits in liter percents at the rate of the consumption tax (a) according to sec. 1 of the law of June 24, 1887; (b) addition according to sec. 42 ibid.																Remarks.
					a 50 b —	a 50 b 02	a 50 b 04	a 70 b —	a 70 b 02	a 70 b 04	a 50 b 12	a 50 b 14	a 50 b 16	a 50 b 18	a 50 b 20	a 70 b 12	a 70 b 14	a 70 b 16	a 70 b 18	a 70 b 20	
					Pfennigs for 1 liter of pure alcohol, and that for spirits, for which the mash-tub tax or material tax—																
					Has been paid.						Has not been paid.										
		Denomination (title).	Folio.	Number.																	
22	23	24	25	26	27	28	29	30	31	32	33	34	35	36	37	38	39	40	41	42	43

APPENDIX T 3.

[No. —— of the register of accounts. Filed the —— day of ——, 188—.]

Declaration of the stocks in spirits on hand for the purpose of taking stock on the —— day of ——, 18—, in the rectifying establishment of ——, at ——, No. —— —— street.

Declaration.						Finding of the inspection.					
	The vessels (itemized)—		Quantity of spirits.								
Serial number.	Denomination.	Number.	Liter.	True alcoholic strength, in per cents, according to Tralles.	Liter per cents.	Quantity of liters.	Apparent alcoholic strength, in per cents, according to Tralles.	Grades of temperature, according to Reaumur.	True alcoholic strength, in per cents, according to Tralles.	Quantity of liter per cents.	Remarks.
1	2	3	4	5	6	7	8	9	10	11	12

APPENDIX U.

[Chief —— district ——, district of the revenue collection office at ——. No. —— of the inventory. No. —— of the application register for operation.]

Plan of fixation.

By virtue of section 13 of the law of June 24, 1887, the undersigned distillery owner, ——, at ——, herewith declares that he will put into operation his distillery, operated by (direct fixing), consisting of (still) (alembic), with the capacity of (240) liters (dome and cooler) ——, distilling apparatus No. 1, during the time subsequently stated, for the production of spirits from (stone fruit, potato mash).

The (separation) distillation of the material, inclusive of the distillation of the low wine, shall be performed during the time from (1st of December, 10 a. m., till and including the 9th of December, 10 a. m.).

Only for mash distilleries (see sample entry No. II):

(*a*) The distillation of mash shall take place on the (1st, 5th, 9th, 13th, 18th, 22d, and 26th of December, every morning from 6 to 12 a. m.) and on ——.

(*b*) The distillation of the low wine produced shall take place by using the same distilling apparatus on the (6th, 14th, 22d, and 27th of December, during six hours in the afternoon of each day) and on ——.

(*c*) Vats (No. 1, with a capacity of 400 liters, four times, and No. 2, with a capacity of 410 liters, three times) shall be distilled.

The total capacity of those vats accordingly contains (2,830) liters.

——, the —— day of ——, 18—.

——

The Owner of the Distillery.

INSTRUCTION FOR THE OWNER OF THE DISTILLERY.

1. For the fixation plan only the blank furnished by the revenue collection office is to be used.

2. The owner of the distillery must accurately declare on the first page of the blank the material intended for distillation and the time for the distillation of mash (material) and low wine, and there must also be given the numbers and the capacity of the vats whose contents are to be distilled within the stated time of operation. At the bottom of the fixation plan the signature is to be placed. The fixation plan, etc., must be distinctly written, and nothing therein must be changed or crossed out.

3. Fixation plans showing defect in the drawing up are at once returned by the revenue collection office, and in such cases it is assumed that they have not been submitted.

4. If nothing is noted in the examination of the fixation plan, the revenue collection office at once fills out in both copies columns 1 to 18 and enters in columns 19, 20, and 21 the amount of revenue calculated; one copy is returned to the owner of the distillery, who has to deposit it before the beginning of operations at a place accessible at any time to the officers, and has to keep it there during the fixation period.

5. After the expiration of the fixation period he has to return this copy within three days to the revenue collecting office, and thereupon is authorized to demand that the copy left with the revenue collecting office be handed over to him.

The still number.	Suppose there are in operation— During days (number).	Suppose there are in operation— During hours of operation (number).	Of which there are spent for— Distillation of the material (hours).	Of which there are spent for— Distillation of the low wine produced from it (hours).	In order to establish the productive capacity— The still is filled with material to fractions of its entire volume— With—	Up to—	The still requires for each distillation of— Wine lee (hours).	Other materials (hours).	Low wine (hours).	Distillations are required for filling of the still with low wine— Of.	Number.	Thus upon the number of hours in column 4 there are distributed distillation of material (number).	Capacity of the alembic (liters).
1	2	3	4	5	6	7	8	9	10	11	12	13	14
								Example entries I.					
1	8	147	117	30	Stone fruit at the tax rate of 0.85 marks for 1 hectoliter.	¾	.....	4	6	Stone fruit.	5	29	240
								Example entries II.					
1	.....	42	42	.....	Potato mash at the tax rate of 78.6 pfennigs for 1 hectoliter of mash space.	¾	.....	4	.....	Potato mash.	.....	11	240

NOTE.—1. The time required for one low-wine distillation can be deducted in advance from the total number of operating hours as time which is to be exempt from taxation, only so far as it is preceded by 5 or 6 full material distillations in each case. Accordingly no time for low-wine distillation can be granted for 1–4 or 5 excessive material distillations [in excess.]

2. A low-wine distillation is to be permitted free of tax then only when no material is mixed with the low wine.

3. In calculating the number of material distillations from the hours of operation an excess of an hour remains unregarded, while for an excess of several hours a full material distillation is to be *entered*.

For each distillation there are given of material (liters).	For the number of distillations in column 13 material is consequently to be used (liters).	Produce percentage of the distillery for the material used (per cent).	Quantity of pure alcohol subject to the consumption tax (liters).	Consumption tax for it according to the rate of—		Amount of the mash-tub tax or material tax or of the addition to the consumption tax.	Amount to be levied according to III *g* of the regulations for execution of sec. 13 of the law of June 24, 1887.			Of the collection register (folio number).	Remarks.
							Consumption tax according to the rate of—		Mash tub tax or material tax, or additions to the consumption tax.		
				0.50 m.	0.70 m.		0.50 m.	0.70 m.			
15	16	17	18	19	20	21	22	23	24	25	26
				M. Pf.	*M. Pf.*	*M. Pf.*	*M. Pf.*	*M. Pf.*	*M. Pf.*		
180	5,220	3.5	182.70	91 35	.....	44 35	.....	.....	.....	.....	.....
200	2,200	6	132	66	.....	17 25	.....	.....	.....	.....	.....
	2,830	.....	169.80	.....	.....	.....	84 90	.....	22 20	.....	.....

4. In the fixation of distilleries with steam power, according to III *g* of the executive regulations to section 13 of the law of June 24, 1887, the calculation of the consumption tax as well as of the mash-vat tax is to be made both according to the capacity of the distilling apparatus and according to the quantity of mash reported. The quantities of material or alcohol found in the latter calculation are to be entered in columns 16 to 18 below the line, while the amount of tax is entered in columns 22 to 24, which otherwise would remain empty, and is levied in case it is higher than the amount calculated in columns 19 to 21.

APPENDIX V.

Chief —— district ——. District of the revenue collection office at ——. No. —— of the inventory. No. —— of the register for reports of operation.]

Distillation register over the crude and fine distillation made in the distilling establishment of ———, at ———, for the ——— quarter of 18—.

[This register contains —— folios, which are fastened together with a cord, the ends of which are sealed hereon with the official seal. Place of the keeping of the vessel (sample entry) (*a*) for the low wine—side room of the kitchen; (*b*) for the spirits—side room of the kitchen. ———, the —— day of ———, 18—.]

INSTRUCTIONS FOR THE OWNER OF THE DISTILLERY.

1. The present distillery register is kept in quarterly sections. It must be returned to the revenue authorities within three days after the close of every operating quarter.

2. In the distillery register the owner of the distillery himself, or at his direction one of the members of his family or an employee of the distillery, must enter all the raw and fine distillation performed in the distillery (material mash and low-wine distillation) separately for each kind of these distillations and for each single filling of the boiler in a special entry.

3. There must be entered in the register:

(*a*) In column 1 the serial number of the balance carried over.

(*b*) In column 2 month and day of using the boiler for raw or fine distillation.

(*c*) In column 3 the kind and in column 4 the quantity of material employed; for example, berries, etc. If a fine distillation is made the words "low wine" are here to be inserted.

(*d*) In columns 5 and 6 must be accurately entered the hour and minute of the beginning and closing of the distillation for each single filling of the alembic, noting whether forenoon or afternoon; by forenoon is meant the time after 12 at midnight to 12 at noon, and by afternoon is meant the time from 12 at noon to 12 at midnight.

(*e*) In column 7 must be entered the duration of each distillation of an alembic in hours and minutes corresponding to the entries in columns 5 and 6.

(*f*) In column 8 the quantity of low wine obtained, or in the case of fine distillation the quantity of spirits obtained must be entered, in liters.

4. The entries in columns 1 to 5 are to be made at the beginning, those in columns 6, 7, and 8 immediately at the close of the distillation of each filling of the alembic.

5. At the close of the quarter the register is to be closed by the owner of the distillery below the last entry by the remark: "Closed (place of residence, date, and name)."

Serial number.	Time of use of the still.		Kind of raw material used.	Quantity of raw material used (liters).	Time (hour and minute) of the distillation.		Duration of the distillation.		Quantity of the low wine or spirits produced (liters).	Notice of inspection by the officers.
	Month.	Day.			Beginning.	Ending.	Hours.	Minutes.		
1	2		3	4	5	6	7		8	9
				Sample entries.						
1...	January ..	30	Potato mash ..	200	8 a. m.....	11 p. m..	3	....	10	....
2...	....do	31	Cherries.....	310	4.10 a. m ..	9 a. m ...	4	50	14	....
3...	February .	3	Gentian root (fell root).	256	1 p. m.....	6 p. m ...	5	....	8	....
4...	....do	16	Low wine.....	100	12.30 p. m .	7 p. m ...	6	30	20	....

Appendix W.

[District of revenue collecting office ——. No. —— of inventory. No. —— of —— register.]

Notification for fixation.

The undersigned, owner —— of a distillery at ——, hereby gives notice that he desires to operate his spirit distillery with distilling boiler No. (1) of a capacity of (150) liters, to produce spirits from —— (potatoes and stone fruit) —— in the (IV) operating quarter of 1887 (time from November 1 to November 10, 1887).

He declares at the same time that during that time he intends to (fill with mash the vats Nos. 1, 2, and 3, with a capacity of 4, 5, and 6 hectoliters, respectively, on three days, one vat each day, and to distill 1,000 kilograms of potatoes, equal to a total quantity of mash of 1,320 liters, —— and 20 hectoliters of stone fruit[1]) —— and he obligates himself not to use in the course of the operation any other kinds of material nor greater quantities than those stated, and to use no other distilling apparatus than that stated, and not to change it or cause it to be changed in any way in its conditions and arrangement.

——, October 10, 1887.

——— ———,
Owner of Distillery.

SAMPLE ENTRY FOR THE FINDING OF THE INSPECTION.

The materials reported were to-day officially inspected by the undersigned —— (and were found correct both in kind and quantity) —— or (the inspection showed that the quantity of potatoes indeed had been correctly stated, but

[1]Officially corrected to 25 hectoliters (see below). ——, revenue tax inspector.

that instead of 20 hectoliters 25 hectoliters of stone fruit were found in the possession of the owner of the distillery. According to this the declaration of the operation has been corrected, and steps have been taken to institute penal prosecution).

———, October 11, 1887.

———,
Revenue Inspector.

The correctness of the finding is acknowledged.

———,
Owner of the Distillery.

SAMPLE ENTRY FOR THE CALCULATION OF THE CONSUMPTION TAX AND DUTY BY THE REVENUE-COLLECTING OFFICE.

In the distillery of ———, the average output from 1 hectoliter of potato mash is 6.5 liters, and from 1 hectoliter of stone fruit 4 hectoliters of pure alcohol. Therefore the person named obtains from 1,320 liters of potato mash 85.8 liters and from 25 hectoliters of stone fruit 100 liters, making a total of 185.8 liters of pure alcohol. For this, according to the rate of consumption tax applying to both kinds of material of 0.50 mark per liter, the consumption tax is calculated at 92 marks and 90 pfennigs.

The mash-vat tax for 1,320 liters of mash, according to the rate here enforced of 78.6 pfennigs per hectoliter, amounts to 10 marks and 35 pfennigs, and the material tax for 25 hectoliters of stone fruit, according to the rate of 0.85 mark per hectoliter, amounts to 21 marks and 25 pfennigs.

The total amount due from ———, therefore, is 24 marks and 50 pfennigs, of which he has been notified, and which he hereby acknowledges to be correct.

———,
Owner of the Distillery.

The above report of fixation is now settled as above.

———, October 12, 1887.

[SEAL.] (Signature.)

——— Office.

APPENDIX X.

Regulations concerning the additional tax on spirits.

I. Levying of the additional tax.

SECTION 1. The additional tax is levied (with the exceptions indicated below) on all the spirits in free commerce, whether they have been produced within the boundaries of the German spirit tax union, or whether they originate from German States not thus far belonging to this union, or whether they originate from countries outside of the tariff union.

The additional tax is also levied on arrack, rum, cognac,

fruit brandy, brandy essences, liquors, and spirits otherwise mixed.

SEC. 2. The following are exempted from the additional tax:

(*a*) Spirits used for industrial purposes including the manufacture of vinegar for medicinal or scientific purposes, or for cleansing, heating, cooking, or illuminating purposes.

(*b*) Spirits in the possession of manufacturers who have permission to sell spirits over the counter or to retail it in quantities of not more than 40 liters, or in the possession of others, heads of households, etc , not more than 10 liters of pure alcohol. These quantities are also exempt from the additional tax even if larger supplies are on hand.

(*c*) Spirits which can be proved to have been imported from abroad under payment of the customs duty of 125 or 180 marks per 100 kilograms.

(*d*) Spirits which are exported from the area of the German spirits tax union.

(*e*) Spirits which have already been officially methylated.

SEC. 3. The spirits existing in free commerce October 1, 1887, which are to be employed for industrial and other purposes, or to be exported, are to be deposited or placed under revenue control for the purpose of obtaining release from the additional tax until they shall be officially methylated or exported, having been previously officially ascertained. In so doing the provisions of the regulations of the storage of spirits shall find suitable application.

The spirits, however, must be reported for withdrawal and must be put into free commerce after payment of the additional tax, if they have not been officially methylated or exported from the area of the spirit tax union within three months. Under the same rule the spirits which on October 1 of this year are found present in the spirits rectifying establishments may be placed under revenue control and thereupon treated according to the provision of the "Regulations for industrial establishments in which spirits subject to revenue control may be rectified." If the release from the additional tax is to take place on the ground of the provision under section 2 *c*, the person concerned must show by presenting and submitting the respective receipts for duty and, if required, by submitting commercial books, commercial correspondence, or in any other satisfactory way showing that the spirits in question have been subjected at the proper time to an entry duty at the rate of 125 or 180 marks per 100 kilograms.

The decision regarding this matter rests with the main office of the district in question, and is to be substantiated by the documents above mentioned (tax receipts, accredited extracts from commercial books, commercial correspondence, or accredited extracts from the same, etc.).

SEC. 4. It is incumbent on the owner of the spirits to report the spirits existing in free commerce on October 1, 1887, to pay the additional tax.

Everyone who on October 1, 1887, possseses as his own unmethylated spirits found in free commerce—for example, alcohol, liqueurs, punch essences, fruit brandy, perfumed

alcohol, and also so-called brandy essences, arracks, rum, and cognac, no matter whether he keeps this stock in his own or in foreign rooms—must report them in writing to the revenue-collecting office of his district at the latest up to October 3, 1887, according to quantity of true alcoholic strength and place of storage, by means of a duplicate declaration, which constitutes an obligation for the levying of the revenue, and in so doing he must use a blank furnished by the revenue-collecting office of the district, as shown in Appendix X 1, and any eventual special suggestions or propositions must at the same time be entered in column 9.

Appendix X 1.

In the case of ready-made potable brandies compounded with sugar the strength need not be declared; on the contrary, the alcoholic contents thereof is to be uniformly assumed at 30 per cent.

No report is needed in case the entire stock of traders who have the license to sell spirits for drinking purposes, or to retail spirits, does not exceed 40 liters of pure alcohol, and in the case of heads of households 10 liters of pure alcohol. In all other cases the entire stock, including the amount remaining exempt from duty, is to be reported.

Perfumeries in small packages up to the weight of 1 kilogram need not be reported.

If spirits subject to report are in transportation during the first days of the month of October, 1887, without having already been subjected to the additional tax, or having otherwise been reported, the duty of reporting, and if need be the paying of the additional tax, rests on the receiver of the goods, who is bound to make report immediately upon the arrival of the spirits.

The declaration must be entered by the revenue office as soon as presented upon a "Register of reports on quantities of spirits declared for the additional tax," to be kept according to Appendix X 2.

Appendix X 2.

SEC. 5. After the entry of the declaration which must be sent by the revenue-collecting office without delay to the controlling officials charged with the inspection of the additional tax, the latter have to perform the inspection of the stock reported. The owners of spirits subject to the additional tax or to the obligation of reporting must furnish or cause to be furnished to the inspecting officials in these inspections such assistance as is required to make the official ascertainments within the required limits.

The changes in the stock by withdrawals and receipts that have taken place up to the moment of inspection have to be notified to the inspecting officials by submitting the commercial books or other exhibits.

SEC. 6. The amount of the additional tax to be calculated by the revenue-collecting office must immediately be notified in writing to those persons interested who, unless a respite is granted, must pay the fixed amount of tax within eight days after notice at the revenue office against receipts.

Sums in pfennigs not divisible by 5 are neglected in fixing the amount of the additional tax of every taxpayer.

The collecting of the additional tax is booked at the rev-

enue-collecting office in a "Receipt journal for the levying of the additional tax on spirits," to be kept according to Appendix X 3. Appendix X 3.

This receipt journal, together with the report register and all exhibits, is to be sent to the respective main office up to February 20, 1888, and the main office thereupon must send the gathered additional tax register, together with the exhibits, to the directive authorities for inspection at the latest up to April 1, 1888.

SEC. 7. Upon application of the taxpayers amounts of additional tax up to 50 marks and over may be respited— II. Respite.

(*a*) Without security for a period up to three months unless there are reasons which render it doubtful whether the tax will be paid.

(*b*) Against security for a period up to six months.

In regard to this the provisions enacted for the respite of the consumption tax find appropriate application.

SEC. 8. Defraudations of the additional tax and other violations of the provisions enacted in regard to the collection thereof will be punished according to the penal provisions enacted in regard to the consumption tax. The additional tax is considered as having been defrauded even when the quantity of spirits or liquors, etc., or the degree of strength of the spirits have been purposely stated too low. III. Penalties.

If there is no evidence of such purpose, differences up to 10 per cent may be left out of consideration.

SEC. 9. After receipt of the declaration the inspecting officials have to repair to the locality, which is to be done as quickly as possible in order to avoid interference with the business operation. There they have to perform the inspection of the stock of spirits according to quantity and strength. They must convince themselves, especially as to whether the entire stock has been correctly declared. In this respect special regard must be had to the business conditions relating thereto or to data obtained in any other way. IV. Inspection of spirits subject to additional tax

If there arises the suspicion that notable quantities of spirits have been secreted, then the condition of affairs is to be ascertained (if necessary, by instituting searches according to the general legal provisions existing on this matter), a protocol is to be drawn up in which the secreted quantity of spirits and the degree of strength thereof must be stated, and this protocol must be submitted to the main office concerned for the purpose of criminal prosecution.

These inspections must be made as searchingly as possible in those establishments that are less worthy of confidence, while in such establishments which in regard to their solidity, from the revenue point of view, enjoy the confidence of the administration, the inspections may be restricted to the absolutely necessary measure.

SEC. 10. In ascertaining the quantity of spirits the following regulations are to be observed:

(*a*) In ordinary casks which, if they are not filled up to the bunghole, must as a rule be made full up to the bunghole it is to be noticed whether they are officially gauged

or not. In the former case the quantity of spirits is to be assumed according to the official gauging, and hence, no further investigation on this matter is needed.

If on the other hand the casks are not officially gauged, they must be weighed on a gauged scale; the liter contents thereupon are ascertained by the aid of the Conradi tables for the purpose of determining the amount of liters of spirits by weight. If, however, no gauged scales are at hand or if the weighing is involved in difficulties, the liter capacity must be ascertained according to the Conradi "Instruction for ascertaining the liter contents of distilling and brewing apparatuses," and according to the appropriate tables. It is allowed to make the necessary calculation only in the revenue office, in which case the data in question regarding the length and diameter of the casks, etc., are to be noted.

If these methods of ascertaining the liter capacity, and especially the filling of the casks (see above, paragraph 1), should for any reason involve great difficulties or great intricacies, the quantity of liters may be ascertained by means of the so-called gauged staff or in any other reliable way, for example, by using the bills and commercial books or other entries of the traders in question, or by estimate, or if necessary by consulting a disinterested expert.

(*b*) In the case of large butts, if they are officially gauged or provided with a scale, the liter contents are to be assumed according to the gauge, or in the indication of the scale, and in the absence of gauging or scale the provisions under *a* of the last paragraph are to be observed.

(*c*) In the case of alcohol reservoirs the liter capacity is to be assumed according to the indication of a scale that may be fitted to the reservoirs. If no such scale exists the contents must be ascertained according to the method indicated under *a* of the preceding paragraph, or by dry measurement. The application of the gauge staff is here excluded (and also in the case under *b*).

(*d*) In the case of bottles and glasses the number of bottles, etc., of the same size is ascertained, and thereupon it is found out what is the capacity of each one of these bottles; thereupon by simple multiplication of the figures obtained the total liter capacity of the bottles, etc., of the same size is calculated.

In the case of valuable brandies, etc., the opening of the bottles provided with a special fastening is to be dispensed with if the contents might thereby be injured, provided that the owner declares himself content that a true alcoholic strength of 50 per cent shall be assumed and that a reliable estimate of the quantity of the brandy is possible. Under the same supposition the opening of the bottles may also be dispensed with in other cases where there exists no objection.

(*e*) In those alcohol factories in which alcohol is purified by filtration over coal dust the quantity of alcohol existing in the filters is to be ascertained by finding out, first, how many liters constitute a day's filling for each one of the stands, and what quantity of alcohol was originally used to moisten the coal dust; these two quantities taken together

give approximately the contents in alcohol of any stand at the time.

As a datum in regard to this it may be stated that a stand of about 50 hectoliters' capacity takes in per day about 4 hectoliters of alcohol, and that the original filling requires about 20 hundredweight of coal dust, and that for 1 hundredweight of coal dust about 100 liters of alcohol are allowed.

SEC. 11. In ascertaining the degree of strength the following method is to be employed:

(*a*) In ordinary alcohol kegs a plunging siphon is to be inserted and from the middle layers of the keg enough alcohol is to be taken out to fill the alcoholometer stand (glass cylinder). The alcoholization is thereupon performed according to the regulations given in regard to ascertaining the degree of strength in exported spirits.

The alcoholization is to be performed, if possible, in the same room in which the alcohol is stored.

It is allowed in the alcoholization to use the alcoholometer of the owner of the spirits, provided it is gauged by the Imperial Normal Gauging Commission.

If no such alcoholometer is at hand, then about one-third to one-half of a liter must be taken out of every keg and this alcohol must be filled into a bottle to be sealed with the official seal and sent well packed to the respective main office for the purpose of alcoholization. The main office is to communicate the result of the alcoholization to the revenue-collecting office.

(*b*) In the case of alcohol reservoirs and large butts the plunging siphon (or any other suitable appliance) is to be inserted, and from the upper, middle, and lower layer a quantity of alcohol in each case smaller than in the preceding is to be taken out and thereupon the different quantities are to be thoroughly mixed. This mixture is thereupon to be alcoholized in the manner prescribed.

(*c*) If the persons liable to the additional tax in cases *a* and *b* declares the true strength at 90 per cent and above, then the ascertaining of the degree of strength is to be dispensed with, and the declared degree of strength is to be used as the basis for calculating the additional tax.

If the taxpayer declares that he can not state the degree of strength of the spirits, etc., then the degree of strength is to be ascertained according to the preceding regulations.

(*d*) In the case of spirits compounded with sugar, supposing that they can be without doubt regarded as finished potable liquors, except the cases noted in section 10 *d*, second paragraph, the alcoholic contents are uniformly to be assumed at 30 per cent.

(*e*) In potable liquors compounded otherwise than with sugar, in the case of arrack, rum, fruit brandy, brandy essence, etc., the degree of strength is to be ascertained by samples, no matter whether these alcoholic materials are in casks or bottled, etc. This ascertainment may be dispensed with and the declared degree of strength may be used as the basis of the additional tax only when the taxpayer declares the true strength at least 50 per cent.

(*f*) In the cases of section 10 *e* a degree of strength of 50 per cent is to be assumed for the quantity ascertained.

SEC. 12. The revenue officials must enter the result ascertained in the inspection upon the declaration according to the printed head and the sample entry, must sign the finding, and cause it to be signed by the persons concerned in acknowledgment.

In regard to this it is remarked that the ascertaining of the quantity and of the degree of strength may be restricted to sample test if the inspection of a part of the declared stock has shown an agreement between the statements of the taxpayer and the official finding.

It is also allowed to dispense with the official ascertainment of the degree of strength if on the bill submitted by the person concerned or in his commercial book the degree of strength is stated, and if no misgivings exist as regards these statements; the calculation of the additional tax is thereupon to be based on the statement in question.

APPENDIX X 1.

Declaration of additional tax.

To the ——— office the undersigned gives notice of the paying of the additional tax on the spirits described in the following table.

———, the —— October, 1887.

(Signature.)
(Residence.)

The declaration has been submitted this day and been entered upon the register of notification under No. ——.

———, the —— of October, 1887.

——— Office.

In collecting the additional tax, amounts less than 5 pfennigs of currency of the Empire are disregarded, while higher amounts of pfennigs are collected so far as they are divisible by 5 without remainder, any pfennigs left over being dropped.

Number of the single posts (items).	Notification of the declarer.								Finding of the inspection.				
	The vessels.		The spirits.						The vessels.				
	Mark and number.	Number and kind.	Sort.	Quantity, in liters.	True alcoholic strength according to Tralles.	Quantity, in liter per cents.	Place of storage.	Suggestions and signature of the declarer.	Mark and number.	Number and kind.	Gross weight.	Tare.	Net weight.
1	2	3	4	5	6	7	8	9	10	11	12	13	14
		Sample entries.											
1	△ 23	1 cask...	Alcohol.	460	82	37,720	Cellar...	For reception into the public warehouse. (Signed) Mueller.	△ 23	1 cask.....	470	170	390
2	J.1	....do ...	....do ...	2,300	88	202,400	Alcohol warehouse.	For paying of tax. (Signed) Schulze.	J.1	.....do	For want of a gauged balance the contents have been ascertained by dry measuring.		
3	△	1 reservoir.	....do ...	12,000	75	9,000	Cellar...	For accounting in behalf of rectification outside of closed rooms. (Signed) Meyer.	△	1 reservoir	Contents taken according to the scale.		
4	....	800 bottles.	Liquor..	600	....	.....	Counting-house (room).	For paying of tax. (Signed) Cohn.	....	800 bottles	.....		

Finding of the inspection.									Further reference of the spirit.		
The spirits.											
Sort.	Quantity, in liters.	Apparent alcoholic strength and temperature.	True alcoholic strength.	Quantity, in liter per cents.	Statement whether the declarer has the license for selling over the bar or retailing of spirits.	Consequently, there are to be left free from the additional tax, liter per cents.	The additional tax is to be paid of, liter per cents.	Amount of the additional tax.	Denomination of the register.	Its folio and number.	Remarks (over fastening applied, etc.).
15	16	17	18	19	20	21	22	23	24	25	26
								M. Pf.			
Alcohol.	456	80.5 % by +6°	83	37,848	.....	.....	.....	.....	Warehouse register.	2/3	Bung and tap, each 1 tax seal
....do ...	2,180	88 % by +10°	89	194,020	No....	1,000	193,020	579	Journal of receipts.	3	
....do ...	12,000	76 % by +11°	77	924,000	.....	.....	.....	.....	Register of accounts over spirits for rectification.	3/1	
Spirit tempered with sugar.	600	.....	*30	18,000	Yes...	4,000	14,000	42	Journal of receipts.	4	

——, the —— of October, 1887.

THE INSPECTING OFFICERS.

*Supposed.

APPENDIX X 2.

[District of the chief office ——. Revenue office ——.]

Register of notification relating to quantities of spirits (declared) entered for payment of the additional taxes.

[This register contains —— folios, which are fastened by a cord, the ends of which are sealed hereon with the official seal. Kept by ——. ——, the —— of ——, 18—.]

Serial number.	Date of the notification.	The notice giver's—		Date of the fixation of the additional tax.	Amount of the additional tax.	Further reference of the spirits.		Remarks.
		Name.	Residence.			Denomination of the register (title).	Its folio and number.	
1	2	3	4	5	6	7	8	9
					M. Pf.			

APPENDIX X 3.

[District of the chief office ——. Revenue office ——.]

Journal of receipts for the collection of additional tax on spirits.

[This register contains —— folios, which are fastened by a cord, the ends of which are sealed hereon with the official seal. Kept by ——. ——, the —— of ——, 18—.]

Serial number.	The previous register's—		The taxpayer's—		The spirits subject to additional tax.		Amount of the additional tax.	The additional tax paid in cash.	The additional tax respited.	Of the credit manual (folio and number).
	Denomination (title)	Folio and number.	Name.	Residence.	Kind.	Quantity in liter per cents.				
1	2	3	4	5	6	7	8	9	10	11
							M. Pf.	*M. Pf.*	*M. Pf.*	

CENTRAL SHEET OF THE GERMAN EMPIRE.

ADMINISTRATION OF THE INTERIOR,
Berlin, Friday, December 16, 1887.

5. TARIFF AND REVENUE MATTERS.

The Federal Council at its meeting on the 15th of December of this year enacted that until the 30th of June, 1888, it shall be lawful—

1. To employ as general methylation substance as provided in section 8 of the regulations relating to the exemption from tax of spirits for industrial and other purposes, a mixture of 4 parts of wood spirits and 1 part of pyridine bases which may be added to the spirits to be methylated in the proportion of 2½ liters to every 100 liters of pure alcohol.

2. That in the preparation of the general substance (compare No. 1) wood spirits of a quality corresponding to the ordinance of the Federal Council of the 7th of July, 1881 (Central Sheet, p. 282), may be employed.

3. That the methylation of spirits temporarily permitted in section 19 of the above-mentioned regulations may continue to be permitted, with wood spirits of the same quality under the limitations and provisions therein prescribed.

4. That all manufacturers who produce varnishes or polishes shall be allowed to methylate the spirits required for that purpose with one-half per cent of oil of turpentine, even if the varnishes or polishes are not intended to be used in their own factory work (sec. 10 of the regulations), but intended for commerce.

THE IMPERIAL CHANCELLOR.
By order: ASCHENBORN.
BERLIN, *December 15, 1887.*

CENTRAL SHEET OF THE GERMAN EMPIRE

ADMINISTRATION OF THE INTERIOR,
Berlin, Friday, June 22, 1888.

In the matter of the methylation of spirits the Federal Council, in its session of June 21, 1888, has enacted:

1. The composition of the general methylation substance prescribed by resolution of the Federal Council of December 15 of last year (Central Sheet for 1887, p. 570), pursuant to the regulation concerning the exemption from tax of spirits for industrial and other purposes, shall remain in force till further notice.

2. Instead of the existing provisions relating to the nature of the components of the general methylation substance (Appendix B 2 of the regulations) the provisions contained in Appendix A shall be in force. But until December 31, 1888, however, wood spirits and pyridine Appendix A.

bases may be employed for methylation, provided they are of a quality corresponding to the requirements in force up to this time.

3. The test to determine the prescribed nature of the wood spirits and the pyridine bases shall follow the directions given in Appendix B.

Appendix B.

4. It shall be lawful for manufacturers authorized to compound the general methylation substance to add to the same 40 grams of the oil of lavender or 60 grams of the oil of rosemary to every liter. The examination by an officially appointed chemist of the components of the general methylation substance, according to the prescribed test, shall also extend to these additions.

5. It is forbidden—

(*a*) To extract again the methylation substance entirely or in part from methylated spirits or, aside from the exception under 4, to add to the methylated spirits such substances as may change the effect of the methylating substance as regards taste or odor.

(*b*) It is forbidden to sell or expose for sale, aside from the exception under 4, spirits that have been treated in the manner given under *a*. Dealers in methylated spirits are obliged to conspicuously display a copy of the above prohibition in their sales room.

6. Persons engaged in the arts and trades may methylate spirits for their own industrial use with 5 per cent of wood spirits of the prescribed quality instead of the general methylation substance or pyridine bases. (Sec. 10 of the regulations.) The conditions under which this methylating agent may be substituted will be found under the provisions of section 9 of the regulations.

7. In like manner also for the future and without the limitations of section 19 of the regulations heretofore in force, dealers may cause to be methylated spirits with 5 per cent of wood spirits for the purpose of sale to those engaged in the arts and industries, and the latter may purchase from the aforesaid dealers such quantities of alcohol as they require if they so desire. The provisions formerly in force will apply.

8. Manufacturers who prepare lacquer or polishes may be permitted to methylate the spirits therein employed with one-half per cent of the oil of turpentine even if the lacquers or polishes are not prepared for consumption in their own industry, but are (sec. 10 of the regulations) intended for sale.

9. For the preparation of brewers' glazing it shall be lawful to methylate with a solution of one part by weight of shell-lac and two parts by weight of alcohol of 95 per cent, which are to be added to the spirits in the ratio of 20 per cent.

The alcohol used in the preparation of the shell-lac solution shall be exempt from tax.

10. It shall also be lawful to cause spirits to be methylated—

(*a*) In the preparation of the following chemicals: The alkaloids, the extracts used as medicines, such as jalap

resin, and scammonium, chloroform, iodoform, ethylartrate, chloral hydrate, sulphuric ether, acetic ether for technical purposes (compare No. 11), collodion, tannin, salicylic acid and salicylate, litharge, and acetate (sugar of lead), with one-half per cent of the oil of turpentine or with 0.025 per cent of animal oil or 10 per cent of sulphuric ether.

(*b*) In the preparation of lake colors when mixed with one-half per cent of the oil of turpentine or 0.025 per cent of animal oil.

(*c*) For the examinations of sugar beets in sugar refineries to ascertain the sugar content when mixed with 0.025 per cent of animal oil.

The provisions in section 10, letter 4, numbered 1 to 5, of the regulations are repealed.

11. Spirits used in the preparation of acetic ether intended for industrial purposes shall be exempt from duty, provided that the use of acetic ether, besides the prescribed methylation of alcohol (fig. 10 *a*), shall be under control.

12. Animal oil, oil of turpentine, sulphuric ether, and shell-lac solution which are to be used as methylation substances must fill the requirements set forth in the instructions in Appendix C for chemical examination. Appendix C.

The examination shall, when necessary, be made by an officially appointed chemist, at the cost of the dealer.

13. In the manufacture of vinegar, alcohol may be methylated with 200 per cent of vinegar, containing 3 per cent of acetic acid (hydrated acetic acid), or with 30 per cent of vinegar, having 6 per cent content of acetic acid (hydrate acetic acid), 70 per cent of water, and 100 per cent of beer. Further, it shall be lawful, for the purpose of methylation, to add in place of water, beer, or yeast water, along with the prescribed amount of vinegar, 100 per cent of pure, natural wine.

14. The supreme financial authorities of the country are empowered, in case of need, to permit less than 1 hectoliter, but not less than 50 liters of spirits to be presented for methylation. (Sec. 7 of the regulations.)

15. The resolution of the Federal Council of September 27, 1887 (Central Sheet of 1887, p. 351), relative to the admissibility of exceptions to the provisional regulations for the execution of the spirits tax law of June 24 of last year will cease to be operative in so far as it affects the regulations concerning the exemption from tax of alcohol for industrial and other purposes at the end of the year 1888.

THE IMPERIAL CHANCELLOR.

Represented by: JACOBI.

BERLIN, *June 21, 1888.*

Appendix A

Nature of the components of the general methylation substance.

1. WOOD SPIRITS.

The wood spirits should be colorless or faintly yellowish. On distilling 100 volumes of wood spirits under normal barometric condition of 760 millimeters pressure of mercury up to a temperature of 75° C. at least 90 volumes should pass over. The wood spirits should admit of being mixed with water in any proportion without notable turbidity. The content of the wood spirits in acetone should exceed 30 per cent. The wood spirits should contain at least 1 per cent, but not more than 1.5 per cent, of constituents which discolor bromine.

2. THE PYRIDINE BASES.

The mixture of pyridine bases should be colorless or faintly yellowish. Its water content should not exceed 10 per cent. On distilling 100 volumes of the mixture under normal barometric condition of 760 millimeters up to a temperature of 140° C. at least 90 volumes should pass over. The mixture should admit of being mixed with water in any proportion without notable turbidity, and should be free from ammonia.

Appendix B.

Instructions for testing the wood spirits and the pyridine bases.

I. WOOD SPIRITS.

1. *Color.*—The color of the wood spirits should not be darker than that of a solution of 2 cubic centimeters of one-tenth normal solution of iodine in a liter of distilled water.

2. *Boiling point.*—One hundred cubic centimeters of wood spirits should be placed in a metallic retort having a distilling tube, which is furnished with a bulb connected with a Liebig's condenser by a lateral tube. Through the upper opening an officially certified thermometer with centigrade scale is introduced, whose mercury bulb stands below the connecting tube. The retort is so moderately heated that the distillate runs off in drops from the condenser. The distillate is caught in a graduated glass cylinder, and if the thermometer shows 75 degrees and the barometer is normal, at least 90 cubic centimeters should have passed over.

When the reading of the barometer departs from normal, then for every 30 millimeters 1 degree should be allowed; that is to say, for example, at 770 millimeters 90 cubic centimeters should pass over at 75.3 degrees; at 750 millimeters 90 cubic centimeters should pass over at 74.7 degrees.

3. *The capacity to mix with water.*—Twenty cubic centimeters of wood spirits should give with 40 cubic centimeters of water a clear or only a faintly opalescent mixture.

4. *Separation with sodium lye.*—On shaking 20 cubic centimeters of wood spirits with 40 cubic centimeters of sodium lye, of 1.3 specific gravity, after half an hour at least, 5 cubic centimeters of the wood spirits should have separated.

5. *Proportion of content in acetone.*—One cubic centimeter of a mixture of 10 cubic centimeters of wood spirits with 90 cubic centimeters of water are shaken in a narrow mixing cylinder with 10 cubic centimeters of double normal sodium lye (80 grams of sodium hydroxide in a liter). Thereupon 5 cubic centimeters of double normal solution of iodine (254 grams of iodine to the liter) are added while the mixture is again shaken. The separating iodoform is taken up in 10 cubic centimeters of ether of the specific gravity of 0.722 by vigorously shaking. From the layer of ether, which separates after a short rest, 5 cubic centimeters are brought by means of a pipette on a watch crystal that has been weighed, and on it slowly evaporated. Then the watch crystal is placed for two hours over sulphuric acid and weighed; the increase in weight should not be less that 0.07 grams.

6. *Capacity to take up bromine.*—One hundred cubic centimeters of a solution of potassium bromate and potassium bromide prepared according to the instructions below are compounded with 20 cubic centimeters of sulphuric acid diluted as explained below. To this mixture, which represents a bromine solution of 0.703 grams of bromine, wood spirits are added from a burette graduated to 0.1 cubic centimeter in drops with constant stirring, prolonged until permanent discoloration takes place. The discoloration ought not to require more than 30 cubic centimeters and not less than 20 cubic centimeters of wood spirits.

The test for the capacity to take up bromine must always be made in full daylight.

INSTRUCTIONS FOR THE PREPARATION OF THE CONSTITUENTS OF THE BROMINE SOLUTION.

(*a*) *Bromine salts.*—After drying for at least two hours at 100 degrees and cooling in the dryer, 2.447 grams of potassium bromate and 8.719 grams of potassium bromide which have previously been tested for purity are weighed and dissolved in water and diluted to 1 liter.

(*b*) *Diluted sulphuric acid.*—One volume of concentrated sulphuric acid is mixed with three volumes of water. The mixture is allowed to cool.

II. PYRIDINE BASES.

1. Color same as in wood spirits.

2. *Behavior toward cadmium chloride.*—Ten cubic centimeters of a solution of 1 cubic centimeter of pyridine bases in 100 cubic centimeters of water are mixed with 5 cubic centimeters of 5 per cent water solution of anhydrous melted cadmium chloride and are vigorously shaken; there-

upon a distinct crystalline precipitate should at once ensue. With 5 cubic centimeters of Nessler's reagent, 10 cubic centimeters of the same solution of pyridine bases ought to give a white precipitate.

3. *Boiling point.*—Proceed as in wood spirits, but the distillate should amount to at least 90 cubic centimeters only when the thermometer has risen to 140 degrees.

4. *Capacity to mix with water.*—As in wood spirits.

5. *Water content.*—On shaking 20 cubic centimeters of bases and 20 cubic centimeters of sodium lye, of 1.4 specific gravity, and allowing to stand for some time, at least 18.5 cubic centimeters of the bases ought to be separated.

6. *Titration of the bases.*—One cubic centimeter of pyridine bases dissolved in 10 cubic centimeters of water is mixed with normal sulphuric acid until a drop of the mixture on congo paper produces a distinct blue border, which immediately disappears again. Not less than 10 cubic centimeters of the acid solution ought to be used in producing this reaction.

To prepare congo paper, filter paper is passed through a solution of 1 gram of congo red in 1 liter of water and dried.

Appendix C.

Instructions for testing animal oil, oil of turpentine, and ether.

I. ANIMAL OIL.

1. *Color.*—The color of the animal oil should be blackish brown.

2. *Boiling point.*—On distilling 100 cubic centimeters in the manner described for wood spirits not more that 5 cubic centimeters should pass over below 90 degrees, but at least 50 cubic centimeters should have passed over when the temperature has risen to 180 degrees.

3. *Pyrrol reaction.*—Two and five-tenths cubic centimeters of a 1 per cent alcoholic solution of animal oil are diluted with alcohol to 100 cubic centimeters. If a pine wood shaving moistened with concentrated hydrochloric acid is introduced in 10 cubic centimeters of that solution containing 0.025 per cent of animal oil it should show a distinct red color after a few minutes.

4. *Behavior toward chloride of mercury.*—Five cubic centimeters of the 1 per cent alcoholic solution of the animal oil on being mixed with 5 cubic centimeters of a 2 per cent alcoholic solution of chloride of mercury should give at once a voluminous flaky precipitate. Five cubic centimeters of the 0.025 per cent alcoholic solution of animal oil mixed with 5 cubic centimeters of the solution of the chloride of mercury should at once show a distinct turbidity.

II. TURPENTINE OIL.

1. *Specific gravity.*—The specific gravity of the oil of turpentine ought to be between 0.855 and 0.865 at 15 degrees.

2. *Boiling point.*—On distilling 100 cubic centimeters in

the manner given for wood spirits not more than 5 cubic centimeters should pass over under 150 degrees, but at least 90 cubic centimeters should have passed over when the temperature has risen to 160 degrees.

3. *Capacity to mix with water.*—Twenty cubic centimeters of oil of turpentine are vigorously shaken with 20 cubic centimeters of water. If, after standing for some time, the two layers have separated and have become clear, the upper layer should carry at least 19 cubic centimeters.

III. ETHER.

1. *Specific gravity.*—Specific gravity of the ether should not be more than 0.730.

2. *Capacity to mix with water.*—Twenty cubic centimeters of ether are shaken with 20 cubic centimeters of water. After settling, the layer of ether should carry at least 18 cubic centimeters.

IV. SHELL-LAC SOLUTION.

Ten grams of the solution on evaporating on the water bath and subsequent heating of the evaporated residue in the drying chamber for half an hour up to a temperature of 100 to 105 degrees should leave at least 3.3 grams of shell-lac.

CENTRAL SHEET FOR THE GERMAN EMPIRE, ISSUED IN THE IMPERIAL OFFICE OF THE INTERIOR, AT BERLIN, FRIDAY, JUNE 7, 1889.

Further executive regulations to the spirit tax law.

NOTICE.

The Federal Council at its session of the 29th of last month resolved that—

1. The "Instructions for ascertaining the alcoholic content of spirits" contained in the appendix shall become operative on and after the 1st of July of this year.

2. Appendixes R 1, R 3, and R 5 of the preceding executive provision to the spirit tax law of June 25, 1887 (Central Sheet for 1887, p. 351), shall be replaced by the accompanying models.

3. In the regulations relating to the exemption from tax of spirits for industrial and other purposes. (Central Sheet for 1887, p. 419.)

(*a*) In section 7, paragraph 1, strike out the words "an alcoholic content of less than 80 per cent Tralles" and insert the words "a true strength of less than 73 per cent by weight."

(*b*) In section 16 strike out the words "spirits of less than 80 per cent Tralles, and down to 35 per cent," and

insert the words "spirits of less true strength than 73 per cent by weight and down to 30 per cent."

4. In the appendixes to the provisions relating to the statistics of spirit distilleries and the taxation of spirits. (Central Sheet for 1889, p. 209.)

(*a*) In the instructions to Appendix 1, No. 3, in the instructions to Appendix 3, No. 3, and in the note (*) under Appendix 5, the words in brackets "equal to 10,000 liter percentages" and, respectively, "equal to 5,000 liter percentages" are to be stricken out.

(*b*) The headings of columns 3 and 4 to Appendix 6 shall read, "Distilleries which produce spirits of a true strength of 73 per cent by weight and more" and, respectively, "Distilleries which produce spirits of a true strength of less than 73 per cent by weight."

THE IMPERIAL CHANCELLOR.
Represented by: VON MALTZAHN.

BERLIN, *June 5, 1889.*

Instructions for ascertaining the alcoholic content in spirits.

INTRODUCTION.

The ascertaining of the alcoholic content of the mixtures of alcohol and water (spirits, etc.) by the revenue office, unless there should exist one of the exceptional cases subsequently mentioned, shall be effected in this way, that by means of weighing the net weight of the spirits is ascertained, and from this weight, by means of Tables 1 and 2 of the calculating tables added to these regulations, after ascertaining the true strength of the spirits, the quantity, in liters, of pure alcohol in the spirits shall be directly ascertained without ascertaining the existing quantity, in liters, of spirits.

In case the net weight of the spirits can not be otherwise ascertained it is to be calculated by the aid of a normal dead weight according to Table 3.

In the case of liquids of specially small alcoholic content the thermoalcoholometer is replaced by the low-wine tester, and Tables 1 and 2 are replaced by Tables 4 and 5.

Exceptions from the mode of examinations above described take place only—

1. If for certain discharges it is prescribed that the quantity, in liters, of spirits (not of pure alcohol) shall be ascertained from the net weight and from the true strength. (See sec. 14 and Table 6.)

2. For the discharge of casks not entirely filled under application of the normal dead weight. (See sec. 15 and Table 7.)

3. For the discharge of spirits not mixed in bottles. (See sec. 16.)

4. For the discharge of mixed spirits, fruit juices, and the like. (See sec. 17 and appendix.)

Appendix.

5. For the taking of stock when the weighing of stock is not practicable and for similar cases. (See sec. 18.)

The details are contained in the following regulations:

I. Regular Method of Discharge.

A. TEST TO BE MADE IN THE BEGINNING OF THE DISCHARGE.

Section 1. (*a*) In every official discharge of spirits in casks the casks presented for inspection have first to be examined as to whether any statement of the applicant regarding the number, marks, and numbers of the casks, as well as in regard to any rolling bands applied, and any dead weight ascertained by the gauge office and branded in are correct.

(*b*) If spirits are presented for exportation or for untaxed deliveries for industrial and other purposes, the following regulations are to be observed:

(1) In order to guard against any exchange detrimental to the fiscal interests, as well as any improper claim of a drawback of tax, it is to be ascertained with all possible care whether the contents really consist of pure spirits, liquor, etc., and not perhaps of spirits methylated or mixed with such, or in other liquids for which the drawback applied for or the canceling of an unpaid account of tax can not be claimed, and also whether the spirits are not mixed with notable quantities of fusel oil, which are apt to cause the alcoholic content to appear larger than it is in reality.

In order to ascertain the presence of wood spirits, pyridine, oil of turpentine, and other methylating substances, as well as of large quantities of fusel oil and other adulterating substances in suspicious spirits a small quantity of the spirits will be mixed in a glass cylinder with three or four times its volume of distilled water or rain water, whereupon in the case of the presence of oil of turpentine, animal oil, or other etheric oils, as well as in the case of a very strong content of fusel, and in the case of any adulterations by light hydrocarbons (naphtha, benzine, and the like), the liquid becomes murky, or even a layer of oil separates on the surface. In all these cases, and even if the liquid remains clear, admixtures of methylating substances, fusel oil, or other adulterating substances may be recognized by smell and taste; this is true for fusel oil even though no separation of oil in the liquid diluted with water ensues, but if the fusel content of the spirits has been increased by intentional addition.

If such examination discloses the presence of the adulterating substance in question in the spirits the discharge thereof is to be refused, and at the same time information is to be made to the directive authorities for the purpose of further proceedings, a sample of at least 1 liter of the liquid in question being submitted.

(2) If the spirits are in casks when presented and it seems impracticable to empty the latter in order to obtain their own weight (sec. 3 *a*), then the bung is to be removed from each single cask and it is to be ascertained as accu-

rately as possible that besides the presence of the requirements designated under No. 1, the casks have not been restricted in their internal volume by the introduction or throwing in of pieces of wood on the inner walls of the staves or bottoms or in any other way detrimental to the revenue interest.

B. METHOD OF ASCERTAINING THE WEIGHT.

1. General remarks.

SEC. 2. Whenever either the gross weight or the net weight of a cask, tank wagon, etc., is ascertained, fractions of a kilogram that are less than half a kilogram are dropped, whereas those that are half a kilogram or more are set down as half a kilogram.

2. Method of ascertaining the weight in the case of casks.

SEC. 3. (*a*) The net weight of the spirits contained in casks must always be ascertained in all cases where it is practicable, especially in all discharges in which the spirits are transferred under the eye of the discharging officers from the receiving vessels or other storage vessels into casks or the reverse, by deducting from the gross weight of the full cask the dead weight of the empty cask, which has been ascertained in each case by official weighing. It is immaterial in this method of ascertaining the weight whether the cask is entirely or only partially filled with spirits.

If the net weight can not be ascertained in this way, then the ascertained gross weight of the cask shall be diminished by deducting—

(*b*) The dead weight ascertained by the gauge office in case this has been done, or

(*c*) An amount of weight corresponding to the normal dead weight prescribed for the different weights of casks. The method of ascertaining the net weight prescribed under *c* applies only to wooden casks. In the case of casks made of other material, therefore, the net weight of their contents can only be ascertained in the manner given under *a* or *b* above.

The following points must be observed in particular:

To *b* and *c:* The roll bands applied for the protection of the casks must always be taken off before weighing the casks in the cases under *b* and *c*.

In the case of casks made of corrugated tin, the roll bands of which are firmly connected with the body of the cask, the roll bands need not be taken off if the statement of the weight is to be based on the statement of the dead weight made by the gauge office.

In other cases wooden roll bands may also be left on if the holder of the cask agrees that for every roll band there shall be deducted from the total weight 750 grams, if that weight is 175 kilograms or more, and 250 grams if the total weight is less than 175 kilograms. If the weight of the wooden bands evidently exceeds these rates of dead weight

the revenue authorities are authorized to order the roll bands to be taken off before the gross weight of the cask is ascertained.

To *b* alone: If the empty cask can not be weighed by the revenue officer, then if the weight of the empty cask has been ascertained by the gauge office and has been placed on record according to regulation by branding at the bottom of the cask, the net weight of the spirits shall be ascertained by deducting the dead weight of the cask ascertained by the gauge office from the gross weight ascertained by the revenue office. In this case also it is immaterial whether the cask is entirely or only partially filled with spirits.

If the customs and revenue officers in their official discharges meet with casks on which the marks of the gauge office have been changed, this is to be entered in a protocol to be drawn up regarding this observation made, and this, if the case requires, is to be forwarded to the local police authorities for further proceedings.

If for special reasons the dead weight given by the gauge office has been left unregarded and in place of it the normal dead weight has been granted, the reason of this procedure has to be stated in the discharge papers.

To *c* alone: The net weight shall be ascertained by deducting the normal dead weight from the gross weight only in so far as it seems impracticable to ascertain the net weight according to the regulations under *a* and *b*, and if, furthermore, the casks presented for discharge are entirely filled. Casks are to be regarded as filled only if the depth of the empty space at the bunghole is not more than 6 centimeters.

The normal dead weight in use at the present time for wooden spirits casks is as follows: For casks of a gross weight up to 250 kilograms, inclusive, 21 per cent; for casks of a gross weight from 250 kilograms to 400 kilograms, inclusive, 18 per cent; for casks of a gross weight over 400 kilograms, 17 per cent.

In carrying out the method of discharge mentioned under *c*, the following "Table 3, for ascertaining the net weight by employing the normal dead weight rates," progressing from one-half kilogram up to 1,005 kilograms, indicates the net weights corresponding to the gross weights ascertained. If by way of exception casks having a gross weight of more than 1,005 kilograms are submitted for discharge, then the gross weight is to be divided into two or more parts, each of which, however, must not amount to less than 400 kilograms, and then the net weights ascertained from the tables for these parts must be summed up.

If the casks presented for execution are not entirely filled, and the dead weight can not entirely be ascertained by weighing the empty casks or by bringing into account the gauge office dead weight, then, if the holder of the goods consents, the cask that is filled only partially is to be filled entirely with water; thereupon the net weight is to be ascertained as in the case of all other completely filled casks by bringing into account the normal dead weight.

If the casks can not be filled, then the net weight is to be ascertained according to the provisions of section 15.

SEC. 4. If in the case of an item of spirits standing or sent under revenue control and requiring repeated discharge the dead weight has been ascertained at the first inspection by weighing the empty casks (sec. 3 under *a*), and if upon the further discharge the same method of ascertaining the dead weight can not be applied, then the finding of the dead weight at first inspection is to be used as the basis of the further discharge.

If, on the other hand, the dead weight can be ascertained by weighing the empty casks only upon a subsequent discharge, then the first finding of the inspection is to be otherwise calculated by using as basis the dead weight ascertained at the further discharge. If in so doing it appears that the liter contents of pure alcohol ascertained at the second discharge falls short of the quantity of liters calculated at the first discharge, then the difference is to be treated as loss of alcohol that has taken place in the meantime. The result of the comparative calculation is to be noted in the discharge papers, but the first finding of the inspection is not to be changed. If, for example, at the first discharge of a cask the true strength of the spirits had been ascertained at 80 per cent, the gross weight at 550 kilograms, the net weight on the basis of the normal dead weight at 456.5 kilograms, and accordingly the amount of pure alcohol at 461 liters, and, furthermore, if at the second discharge of the same cask the true strength has been ascertained to be 79.8 per cent, the gross weight at 545 kilograms, the dead weight by weighing the empty cask at 97 kilograms, and therefore the net weight at 448 kilograms, and the quantity of pure alcohol at 451 liters, then for the first finding of the inspection on the basis of the true strength at that time ascertained of 80 per cent, and of the gross weight of 550 kilograms, and applying the dead weight ascertained at the second inspection of 97 kilograms, the net weight would have to be otherwise calculated at 453 kilograms, which corresponds to a quantity of pure alcohol of 458 liters. Against that quantity of liters thus calculated at the first finding by the inspection the quantity of liters ascertained at the second discharge at 451 liters falls short by 7 liters, which would have to be treated as real deficiency.

In both cases treated of in the preceding paragraphs it is assumed that no doubt exists regarding the identity of the casks of the item of spirits established by the seals of the revenue office or in any other way.

3. Method of ascertaining the weight in the case of tank wagons, reservoirs, and the like.

SEC. 5. (*a*) When spirits are transported in tank wagons, and if it seems not practicable to weigh the spirits in casks according to the regulations of section 3 under *a*, then its net weight may be ascertained by weighing the wagons in

an empty and a filled condition by means of the centesimal scales, observing the following rules:

(1) Only gauged centesimal scales shall be admitted for weighing the tank wagons.

(2) The weights to be used for weighing in case of such discharges in the operating rooms of the manufacturers must as a rule be kept under official lock.

(3) In the case of strong wind or rain, in order to guard against any influence exerted on the weighing operation by the weather, a tent-like roofing has to be erected over the bridge of the scales during the weighing, which in case of need must be rendered tighter by curtains, boards, and the like.

(4) Before every discharge of a tank wagon it must be ascertained whether the centesimal scales work right by first placing a sample weight on it.

(5) Each tank wagon is to be weighed at least twice by removing the wagon entirely from the bridge of the scale after its dead weight, respectively its gross weight, has been ascertained and then moving it once more to the bridge and weighing it again. In weighing, the wagon must if possible be placed on the middle of the bridge, and at the second weighing it must always be placed on the same spot as at the first weighing. If the results of the repeated weighings of the empty wagon or of the filled tank wagons differ from each other by more than one-thousandth part of the smallest of the weights ascertained, then the scales are to be regarded as useless and the weight has to be officially ascertained in casks according to the regulations of section 3. If, on the other hand, the differences do not amount to the weight value just mentioned, then the average weight of the respective results of weighing is to be used in the revenue discharge.

(6) In the respective columns of the discharge papers, according as the net weight of the spirits has been ascertained by weighing the tank cars in the empty and in the filled condition on the centesimal scales or according to section 3, the various results ascertained and, if need be, also a remark concerning the sample loading of the centesimal scales that preceded the weighing are to be entered.

(*b*) The directive authorities may also allow the weight of the spirits to be ascertained in other vessels; for example, in iron reservoirs, the dead weight of which has been ascertained, and which are connected with scales under special conditions to be prescribed for such cases.

C. METHOD OF ASCERTAINING THE STRENGTH.

1. Kinds of thermoalcoholometers intended for official use.

SEC. 6. The commercial value of a mixture of alcohol and water is determined by the quantity of pure alcohol contained therein.

The latter is ascertained on the one hand by the absolute weight (the net weight) and on the other hand by the density (specific weight) of the liquid. But as a definite con-

tent in alcohol corresponds to every density of a mixture of alcohol and water, it is customary, in order to ascertain the value of the mixtures, not to ascertain their density, but their percentage in alcohol, the so-called alcoholic strength, which is more convenient in practice. Alcoholic strength in percentages of volume means the proportion of the alcohol contained in the mixture to the volume of the entire mixture. Alcoholic strength in ratio of weight means the ratio of the weight of the alcohol contained in the mixture to the weight of the entire mixture.

The alcoholic strength is ascertained by the alcoholometer. As the specific gravity of alcohol is less than that of water, the alcoholometer sinks deeper in mixtures richer in alcohol than in those less rich; thus it assumes a different position in a mixture according to its alcoholic strength. But its position is furthermore influenced by the temperature of the mixtures. Since on rising temperature the density of a mixture decreases, and since it does so more rapidly than the volume of the alcoholometer increases, the instrument descends lower into the mixture with every rise in temperature; therefore, the higher the temperature the greater is the strength indicated by the instrument. Thus, whenever measurements are made with the aid of the alcoholometer it is necessary also to ascertain the temperature. For this purpose the alcoholometer is connected with the thermometer and forms with it the thermoalcoholometer.

In order to exclude the influence of the various temperatures a definite temperature has been introduced in investigations regarding the connection between the density and composition of the mixtures of alcohol and water, and this has thereupon been transferred as the normal temperature to the process of testing for alcohol. The strength read from the alcoholometer at the normal temperature is the true strength, while the indication of the alcoholometer at any other temperature is called the apparent strength belonging to that temperature.

In place of the previous thermoalcoholometer which—assuming a normal temperature of plus $12\frac{4}{9}$ degrees of the 80 degrees thermometer scale—according to Reaumur, state what percentages in volume of the mixtures to be investigated consisted of pure alcohol (strength according to volume percentages) for revenue measurement, assuming a normal temperature of plus 15 degrees of the centigrade thermometer scale—Celsius. Only such instruments are to be used which state what percentages of weight of the mixture to be investigated consist of pure alcohol (strength in percentages of weight).

The latter instruments bear on the alcoholometer scale the words "the alcoholometer by percentages of weight;" on the thermometer scale the words "degrees of the centigrade thermometer," and in order to distinguish them from the volume alcoholometers still used in practice they are marked in this way that the thermometer scale on both sides is bordered by a pale red line about 1 millimeter in breadth. There are two kinds of them:

(*a*) Thermoalcoholometers to determine the apparent

strength of spirits from 10 to 65 percentages of weight, exclusive, the alcoholometer scale being divided according to whole and half percentages of weight into centigrade degrees.

(*b*) Thermoalcoholometer to determine the apparent strength of the spirits of 65 to 100 percentages of weight, the alcoholometer scale being divided into whole and fifth percentages of weight and the thermometer into whole and half degrees centigrade.

For the discharge of low wines under 10 per cent of apparent strength a smaller thermoalcoholometer is used, called "low-wine tester," with division of the alcoholometer scale according to whole percentages of weight and on the thermometer scale according to whole degrees centigrade. The low-wine testers bear on the alcoholometer scale the words "alcoholic content according to percentages of weight," and on the thermometer scale the words "degrees of the centigrade thermometer."

The thermoalcoholometers must be gauged; the low-wine testers must be officially certified. The gauging of the former is rendered divisible by etching in a stamp with the year and number on the glass body above the thermometer scale and a smaller stamp on the dome of the spindle. On the glass body the statement of the weight of the instrument is etched in milligrams. On the spindle above the upper edge of the alcoholometer scale a line is etched which extends at least over one-half of the circumference of the spindle, and the lower boundary line of which falls within the plane of the edge of the scale. If the lower boundary line does not fall within the edge of the scale, that is a sign that the scale has been illegally displaced.

The certification of the low-wine testers is effected by etching in a stamp with the year and the number on the glass body above the thermometer scale. On the spindle below the dome the stamp is etched, and above the upper border of the alcoholometer scale a line is etched in the same way as in the thermoalcoholometer.

2. Apparent strength.

SEC. 7. The spirits, the alcoholic content of which is to be tested, must be thoroughly stirred and thereupon a sample is to be taken from the middle of the cask in question. The sample is to be filled into a stand glass intended for this purpose which shall be transparent and as free as possible from flaws and have the same width throughout, with edge cut off smooth and its diameter twice as large as the largest diameter of the thermoalcoholometer. Enough liquid is to be introduced into this sampler so that after the instrument has been immersed therein the level of the liquid shall yet be several centimeters below the edge of the vessel. After the sample has been vigorously stirred the stand glass is put up firmly and, if possible, the temperature of the sample is allowed to become approximately equal to the temperature of the air.

The alcoholometer spindle is thereupon slowly immersed in the liquid so that all oscillation of the spindle and

any consequent wetting above the line of immersion is avoided.

At the same time care is to be taken that the spindle shall prove to be clean everywhere; for example, not to have been in contact with greasy fingers, because otherwise the line more accurately described below, at which the level of the liquid intersects the spindle, is easily changed.

The reading of the alcoholometer takes place at that line at which the level of the liquid intersects the spindle. The discovery of this line of intersection, however, is rendered difficult by the fact that a small ridge of liquid forms around the spindle concealing the line of intersection, as shown in slight enlargements in Fig. A below.

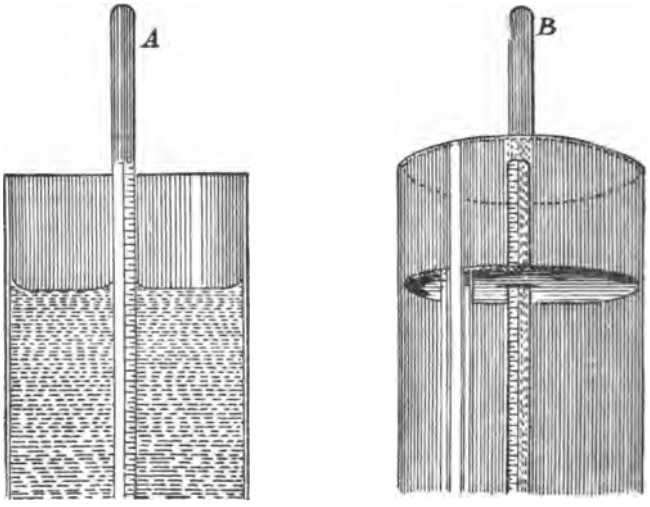

In order to recognize the line of intersection the eye is placed in a position directly below the level of the liquid, then at the place above which the ridge of liquid lies only a line is visible which projects distinctly above the level of the liquid on both sides of the spindle, and forms a sharp contrast with the spindle. This line, as indicated in Fig. B above, represents the line of intersection. If the eye is held too far below the level of the liquid, then instead of the line an elliptical surface is seen; it is only when the eye rises that this surface shrinks to a line.

The indication of the line on the scale lying next to the line of reading is to be taken as the apparent strength of the liquid. If the line of reading lies midway between two lines of the scale, the indication of the upper line is taken.

Immediately after reading the alcoholometer the thermometer is read. In so doing the eye is put at a level with the upper end of the column of mercury. The indication of the line of the scale lying next thereto is taken as the degree of temperature of the liquid. If the eye strikes

the middle between two lines of the scale the indication of the upper line is taken.

SEC. 8. If one and the same discharge paper is to be used in discharging the contents of several entirely filled casks of approximately equal, that is to say, of an approximately equal gross weight, not differing from each other more than 10 per cent, and of corresponding capacity as well as of about the same strength, then the alcoholic content in regard to such casks is to be ascertained by a single average sample, and this average finding is to be used as the basis of the further ascertainment of the finding of the inspection. The following method is to be observed:

The spirits contained in each of the casks in question after their bungholes have been opened are to be thoroughly stirred, and thereupon from the middle of every cask a sample is to be taken of about the same volume from each cask. The samples are poured into a perfectly clean, dry vessel, the mixture is thereupon thoroughly stirred, and thereupon the spirits are tested for alcohol in the stand glass above described.

The procedure of the average testing for alcohol of spirits in several casks must be carried out without any interruption. (Regarding the further procedure, see especially sec. 12.) If the item of spirits in question comprises casks the gross weight of which differs by more than 10 per cent from the largest or smallest of the casks used in ascertaining the average, or if they show an evident larger departure in their capacity, or if they show a striking difference from the other casks in the strength of the spirits, or if they are entirely filled, then each one of them must be specially tested for alcohol, unless the average of these vessels among themselves may be ascertained according to the preceding regulations.

The discharge papers must always accurately show to what extent the method of averages has been employed.

As a rule this principle is to be observed, that an item of spirits is to be tested for alcohol at every subsequent discharge, the result of which, according to the provisions in force, must be compared with that of the preceding discharge in the same way, either by ascertaining the true strength of each separate cask or by the average test above described, as was done at the first discharge.

SEC. 9. If the contents of a tank car or another large vessel are to be tested for alcohol, then they are first of all to be thoroughly stirred according to the instruction of the discharging officer. Immediately thereupon at least two or three samples are to be taken out from different depths of the vessel, and are to be examined in the stand glass, having been once more thoroughly mixed.

No average test shall be allowed in the discharge of several tank cars or other large vessels.

3. True strength.

SEC. 10. If the apparent strength, as well as the temperature of the mixture, has been ascertained in the manner prescribed above, then the true strength is ascertained

for apparent strengths of 10 per cent upward with the aid of the following "Table 1, to ascertain the true strength." This table gives the true strengths for the ascertained apparent strengths for the degrees of temperature from minus 12 to plus 30 degrees—at the apparent strengths from 10 to 20 per cent, however, only for the temperature degrees above zero and at the apparent strengths from 20 to 30 per cent only for the temperature degrees from minus 5 degrees onward—for the apparent strengths from 10 to 65 per cent by half percentages, and farther on progressing in fifths of per cents; the true strengths up to 65 per cent are rounded off to half per cents, and farther up to fifth per cents. For the lower strengths till up to 65 per cent each page comprises only one table with whole degrees of temperature, and for the higher strengths two half tables with whole and half degrees of temperature.

Each table or half table contains in the first horizontal column the apparent strengths, and in the first vertical column the degrees of temperature. Where a vertical and horizontal column intersect one finds the true strength of the spirits tested belonging to the apparent strength of the first horizontal column and to the temperature of the first vertical column.

If the liquid to be investigated shows an apparent strength of less than 10 per cent, then the true strength is to be ascertained by means of "Table 4, to ascertain the true strength of spirits of low percentage," which is arranged to correspond.

D. METHOD OF ASCERTAINING THE QUANTITY OF LITERS OF PURE ALCOHOL.

SEC. 11. From the net weight ascertained and from the true strength of the spirits recorded, if the latter amounts to 10 per cent or more, the existing quantity of liters of pure alcohol is to be ascertained directly by employing the subjoined "Table 2, to ascertain the content in pure alcohol." Table 2 gives the content of pure alcohol for one and the same true strength for each two pages facing each other, at the left for net weights from 0.5 to 59 kilograms, at the right for net weights from 60 to 10,000 kilograms. The true strengths progress up to 65 per cent by half percentages and farther up by fifth percentages. The liter content of pure alcohol is given for net weights up to 900 kilograms in tenths of liters and above 900 kilograms in whole liters. Each page comprises two half tables, the first horizontal column of which indicates the true strength, whereas the first vertical column gives the net weight. Where a horizontal and vertical column intersect one finds the content of liters of pure alcohol belonging to the true strength of the first horizontal column and to the net weight of the first vertical column.

Fractions of a liter, if they are less than half a liter, are left unregarded, but if more than half a liter are counted as a whole liter.

Since for net weights above 100 or above 1,000 kilo-

grams the statements are made respectively from 100 to 1.000 kilograms progressively, in the case of weights larger than 100 kilograms the measurements are first to be made for the full hundreds (or thousands), then for the tens, and finally for a half kilogram if such remains, and without rounding off for entire liters, and the separate results are thereupon to be added. In the final sum thus resulting, fractions of a liter, if less than half a liter, are dropped, otherwise they are counted as a whole liter. If, for example, with a true strength of 80.8 per cent the net weight is 5,542.5 kilograms, one finds for the net weight the content of pure alcohol would be, 5,000 kilograms equal 5,100 liters, 500 kilograms equal 510 liters, 42 kilograms equal 42.8 liters, 0.5 kilogram equals 0.5 liter; together for the net weight 5,542 kilograms equal 5,653.3 liters, or, in round numbers, 5,653 liters being the content of pure alcohol.

If the liquid to be investigated has a true strength of less than 10 per cent, then the quantity of liters of pure alcohol is to be ascertained by means of "Table 5, to ascertain the alcoholic content of spirits of low strength," which has been arranged to correspond.

SEC. 12. If several casks have been tested for alcohol by means of an average sample (sec. 8), then the quantity of liters of pure alcohol contained in them, too, is not to be ascertained for each cask separately, but in one figure from the total net weight of those casks.

SEC. 13. The quantity of liters of pure alcohol ascertained according to the preceding regulations is to be entered as the result of the discharge in the discharge paper, without regard to any possible discrepant contents of an existing declaration of an interested party.

II. METHODS OF DISCHARGE IN SPECIAL CASES.

1. Methods of ascertaining the quantity of liters of spirits (not of pure alcohol) from the net weight and true strength.

SEC. 14. Where for special cases it is prescribed that the quantity of liters of spirits (not of pure alcohol) shall be ascertained from the net weight and from the true strength—as for purpose for entry in the account book relating to accessions and discharge of methylated spirits as well as in the application for methylation of spirits (for vinegar manufacturers)—this quantity is to be ascertained by the aid of "Table 6, to ascertain the quantity of liters of spirits from the net weight and the true strength."

The table in the first vertical column gives the true strength up to 100 per cent, and that up to 10 per cent in whole percentages, up to 65 per cent in half percentages, and farther up in fifth percentages. The first horizontal column contains the weights from 1 to 9 kilograms. Where a vertical column and a horizontal column intersect, one finds the quantity of liters of spirits (not of pure alcohol) belonging to the true strength in the first vertical column, and to the weight of the first horizontal column. If the net weight is larger than 9 kilograms the number of liters for

the tens, hundreds, etc., of kilograms is ascertained by moving the decimal point in the number of liters given in the table to the right, and for the total weight the total number of liters is found by adding the result of these findings. If, for example, the true strength of the spirits is 77.4 per cent and their net weight 935 kilograms, then the table first of all gives the number of liters for 900 kilograms with 1,055.57 liters, as 30 kilograms with 35.185 liters, and again for 5 kilograms with 5.8643 liters, so that for 935 kilograms together 1,096.6193 liters, or, since fractions of half a liter and above are to be rounded off into whole liters, 1,097 liters of spirits (not of pure alcohol) are obtained.

2. Discharge of casks not entirely filled so far as the normal dead weight is to be applied.

SEC. 15. If a cask not entirely filled, that is to say, one in which the depth of the empty space at the bunghole is more than 6 centimeters, is presented for discharge, and the dead weight can not be ascertained by weighing the empty casks or applying the gauge office dead weight, and if the holder of the goods does not consent to have the cask filled with water, then the casks may first of all be measured as regards length, and depth of bunghole, and depth of bottom by means of the so-called length and height measure (see sec. 10 of Conradi's "Instructions to determine the liter capacity of distilling and brewing utensils by measuring in the dry way together with tables to ascertain the liter capacity of cylindrical spaces"), and thereupon, as indicated in the above instruction, the entire capacity is to be ascertained by using the tables belonging to the instructions. Thereupon, from the apparent strength and from the temperature of the spirits contained in the cask, their true strength is ascertained.

The further procedure is taken by the aid of "Table 7, to ascertain the weight of 1 liter of spirits." The table or each half table thereof contains in the first vertical column the temperatures from 0 to plus 25° C. for true strength up to 9 per cent, from 0 to plus 30° C. for true strength up to 19.5 per cent, from minus 5 to plus 13° C. for true strength up to 29.5 per cent, from minus 12 to plus 30° C. for true strength up from 30 per cent and above, whole degrees being given for the true strength up to 65 per cent, and whole degrees and half degrees for the higher strengths. The first horizontal column shows the true strength up to 99.8 per cent, and that up to 10 per cent in whole percentages, up to 65 per cent in half percentages, and farther up in fifth percentages. Where a vertical column and a horizontal column intersect, one finds the weight of a liter of spirits belonging to the temperature of the first vertical column and the true strength of the horizontal column.

By multiplication of the weight given in Table 7, of 1 liter of spirits at the temperature and the true strength ascertained for the spirits presented with the ascertained quantity of liters of the capacity of the cask, the net

weight of the latter is thereupon to be calculated such as would appear if it were entirely filled. Thereupon it is to be ascertained by means of Table 3, what rate of normal dead weight corresponds to the calculated net weight.

This rate of dead weight is to be deducted from the true gross weight ascertained by weighing; the remainder is the net weight of the spirits really present in the casks. From this, by the aid of Table 2, the quantity of liters of pure alcohol is ascertained.

If for example the total capacity of a cask not entirely filled with spirits, the real gross weight of which has been ascertained to be 440 kilograms, is ascertained by dry measurement to be 489 liters, the temperature of spirits in the casks to be minus 2.5 degrees and the true strength to be 80.6 per cent, then, according to Table 7, the weight of 1 liter of spirits of this strength and temperature is 0.8599 kilogram; therefore the weight of 489 liters is equal to 489 times 0.8599 or 420.4911 kilograms; or, in round numbers, 420 kilograms.

According to Table 3 the net weight of 420 kilograms corresponds with a calculated gross weight of 506 kilograms, and therefore the normal dead weight for the casks in question is 86 kilograms. Deducting this from the true gross weight of 440 kilograms, there results the true net weight of the spirits in the cask (440 minus 86 equal to), 354 kilograms, of which, according to Table 2, the quantity of liters of pure alcohol is calculated for 300 kilograms at 305 liters, for 54 kilograms at 54.9 liters; therefore, for 354 kilograms at 360.2 liters, or, in round numbers, 360 liters.

In the discharge of an imperfectly filled cask according to the regulations of this paragraph the discharge papers must show, besides the gross weight, also the dimensions ascertained with the length and height measures.

3. Discharge of unmixed spirits in bottles, etc.

SEC. 16. To ascertain the quantity of liters of pure alcohol of an item of spirits in bottles, carboys, demijohns, jars, etc., which are not mixed with saccharine substances or other ingredients to such extent that a reliable test by means of the thermoalcoholometer appears excluded, it suffices that if the receptacles have approximately the same capacity, that is to say, not differing from each other by more than 10 per cent, to ascertain the liter capacity as well as the true strength of the spirits by opening some sample bottles, etc., and convincing one's self that the contents of all the bottles, etc., show the same alcoholic content and do not contravene the suppositions given in section 1 under *b* 1.

The weight of 1 liter of alcohol of the true strength ascertained and the temperature of 15° C.—no matter what was the temperature of the sample examined—is to be looked for in Table 7, and by multiplying this weight with the number of liters ascertained of the whole item the net weight of the latter is to be calculated. From the net weight found the quantity of liters of pure alcohol is thereupon ascertained by means of Table 2.

If for example the liter capacity of an item of spirits in bottles is ascertained to be 535 liters, and their true strength at 45.5 per cent, then, according to Table 7, the weight of 1 liter of spirits of this strength and of the temperature of 15 degrees is 0.9266 kilograms; therefore of 535 liters (535 times 0.9266 equals), 495.7310 kilograms; or, in round numbers, 496 kilograms, from which, according to Table 2, the quantity of liters of pure alcohol is calculated for 400 kilograms at 229.8 liters, for 96 kilograms at 55.1 liters; therefore for 496 kilograms at 284.9 liters, or, in round numbers, at 285 liters.

4. Discharge of mixed spirits, fruit juices, and the like.

SEC. 17. The quantity of liters of pure alcohol in spirits, punch essences, and other alcoholic essences mixed with saccharine or other ingredients to such extent that a reliable test by means of the thermoalcoholometer appears excluded, as well as in the case of fruit juices, is ascertained in accordance with the supplement by distilling a sample in a distilling apparatus provided for this purpose.

5. Taking of stock when it is impracticable to weigh the stock and similar cases.

SEC. 18. In taking stock in the establishments for the rectifying of spirits and in storage houses and in similar cases, the true strength having been ascertained according to sections 7 to 10, the existing quantity of liters of pure alcohol, if it is impracticable to weigh the stock of spirits on hand, is to be ascertained by finding out first of all the quantity of liters of spirits in the various reservoirs, etc., by means of the stand glasses, scales, and the like fitted to them. With the aid of Table 7, thereupon multiplying the weight found in the table for 1 liter of spirits of the ascertained temperature and true strength with the quantity of liters ascertained for every reservoir, the total net weight of the spirits contained in each vessel is calculated, and from this, by the aid of Table 2, the quantity of liters of pure alcohol is determined.

If for example at the temperature of plus 3 degrees the filled capacity of a reservoir is ascertained to be 100,000 liters and the true strength of the spirits 80 per cent, then, according to Table 7, the net weight of 1 liter of these spirits is 0.8569 kilograms, and therefore the net weight of 100,000 liters (100,000 times 0.8569) is equal to 85,690 kilograms. Table 2 gives for a net weight of 8,000 kilograms of spirits at 80 per cent the content of pure alcohol at 8,080 liters, and therefore this content of pure alcohol is calculated for 80,000 kilograms at (10 times 8,080), 80,800 liters; for 5,000 kilograms, according to the table, at 5,050 liters; for 600 kilograms, according to the table, at 606 liters; for 90 kilograms, according to the table, at 90.9 liters; therefore, for 85,690 kilograms, at 96,546.9 liters, or, in round numbers, at 86,547 liters.

The calculations thus made are to be added in the cases in question to the discharge papers.

NOTE.—The calculating tables, 1 to 7, are not printed here.

SUPPLEMENT TO INSTRUCTION FOR ASCERTAINING THE CONTENT OF ALCOHOL IN SPIRITS.

Discharge of mixed spirits, fruit juices, and the like.

1. The quantity of liters of pure alcohol in spirits, punch essences, and other alcoholic essences mixed with saccharine matter or other ingredients to such extent that a reliable test by means of the thermoalcoholometer seems excluded, as well as in the case of fruit juices, is ascertained by means of the distilling apparatus described in detail under 3.

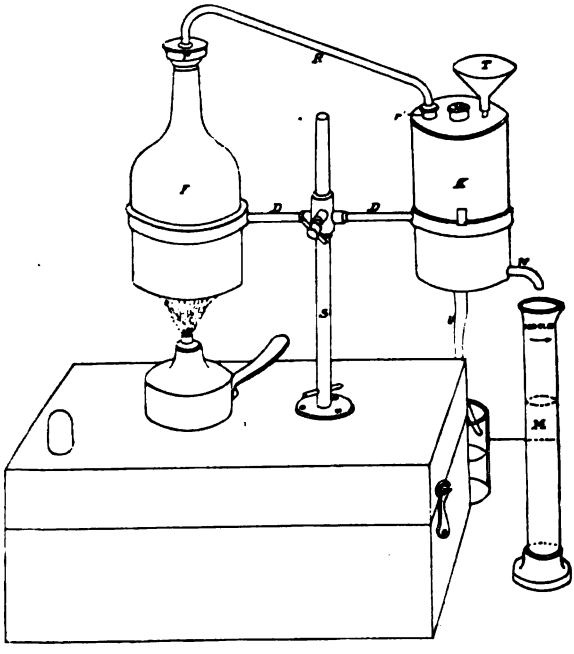

2. From the liquid to be discharged, having been thoroughly stirred or shaken, a sample is taken for the purpose of testing for alcohol, and this sample is to be examined to find out whether its quality does not contravene the requirements given under *b* 1, in section 1, of the instruction to ascertain the content of pure alcohol in spirits. If several casks or bottles filled with the same kinds of spirits and of approximately equal capacity, that is to say, not differing from each other by more than 10 per cent, or if different kinds of spirits in an equal number of bottles of approximately equal capacity are submitted for inspection by means of one and the same discharge paper, then, for the

purpose of testing for alcohol, it is permitted to make up an average test by duly shaking the contents and then from the middle of each cask, and in the case of goods presented in bottles from a sufficient number of bottles, or in the case of different kinds of product in bottles from the same number of bottles of each kind, a sample of approximately the same volume. These samples are poured into a perfectly clean and dry vessel, then the mixture is thoroughly stirred, and the requisite amount of it is introduced in the distilling apparatus to ascertain the strength. The strength ascertained for the mixture is thereupon to be used in calculating the pure alcohol contained in the casks and bottles submitted for examination.

3. The distilling apparatus serving to test for alcohol (see subjoined drawing) consists of the boiler F, to be heated by means of an alcohol flame and a tube, R, connecting the boiler with a cooler, K, in which the vapors produced by the distillation are condensed. A measuring glass, M, with a mark corresponding to the volume of 100 cubic centimeters serves to fill the boiler with the requisite amount and also to receive the liquid running out of the cooler. The alcoholic content of the latter is ascertained in the same measuring glass by the aid of short thermoalcoholometers.

The drawing gives the position of the apparatus in use; the boiler F and the cooler K hang in the rings of the double carrier D; this double carrier is upheld by the standard S, which is screwed in the thread cut in the lid of the box. The tube R may be drawn tight to the boiler by the screw *r* and by a second somewhat smaller screw r^1 to the cooler; the joints are made air-tight in both places by leather washers. The cooler K surrounds a brass worm galvanized inside, which communicates above with tube R and below issues from the cylinder at *w*. The lid of the cylinder bears the funnel T, the tube of which extends to near the bottom of K, so that the cooling water introduced through T first flows around the lower part of the worm. The surplus of heated water flows off through the tube *v* and through the hose drawn over it. The upper end of *v* rises above the lid of the cylinder K and lies under the cap U, which serves to empty K completely.

4. With the measuring glass M 100 cubic centimeters of the product to be tested for alcohol are carefully measured and poured into the boiler F, then 100 cubic centimeters of water are added. Next the boiler and cooler are hung in the double carrier D and connected with each other by the tube R, drawn tight by means of the screws *r* and r^1. Finally the cooler is filled with cold water until the surplus begins to flow out from *v*. If now the boiler F is heated a clear liquid soon flows off from the cooler at *w* in drops which is caught in the measuring glass M, which has first been rinsed with pure water, and then completely emptied. On continuing the heating first the upper part of the cooler becomes hot, and gradually the lower part also begins to get warm. When this occurs, cold water is at once poured in the funnel until the whole cooler once more feels cold to the touch. Special attention has to be paid to the renewal

of the cooling water in the first half of the distillation. It may be stated that the water has to be renewed twice or, at most, three times during every distillation.

The distillation is to be conducted in such way that a direct transfer of the liquid from the distilling boiler through the cooler into the measuring glass is avoided. For this purpose attention has to be paid to the size of the alcohol flame; is is especially to be recommended that the flame be held in the middle of the boiler only in the beginning of the heating, but as soon as the liquid begins to boil and the dropping of the liquid from the cooler begins let the lamp be moved so far to the side that the flame strikes not only against the bottom, but in part also against the side of the boiler. Those tests in which through neglect the distillation takes place so actively that the distillate runs off not exclusively in drops, but in parts in a continuous flow, are always to be rejected.

If the level of the liquid in the measuring glass M has gradually approached the mark and lies only as yet 1 to 2 millimeters below it, then the glass is removed from the outlet W and the distillation is interrupted by removing the alcohol flame. Thereupon enough water is carefully poured into the measuring glass to cause the level of the liquid just to reach the mark. Then the liquid in the glass is shaken or stirred, and the appropriate short thermoalcoholometer out of the two belonging to the apparatus is immersed into the liquid. If in catching the distillate in the measuring glass or in filling up the latter with water the level of the liquid should have risen above the mark, the test is to be rejected.

Before testing a second kind of spirits the connecting tube R has to be removed after loosening the screws, and the boiler F is to be emptied. It is not necessary to clean it. On the other hand, it is to be recommended that the measuring glass be rinsed with water before every new examination. In placing the apparatus in the box belonging thereto the various parts are to be placed in the positions marked in the box.

Before placing in the cooler the latter, which when in use is always filled with water, is to be emptied, for which purpose the cap *u* must be unscrewed.

5. In ascertaining the apparent strength of the distillate obtained with the aid of the corresponding thermoalcoholometer and in ascertaining the true strength, the general regulations of sections 7 and 10 of the instructions are to be followed, employing Table 1 or 4. The true strength thus found is the alcoholic content of the product examined.

6. In order to ascertain the quantity of liters of pure alcohol contained in the product to be discharged, if the latter is in casks and the capacity of the casks has not been ascertained by the gauge office, this capacity is always ascertained by measuring the casks by means of the length and height measure or by subsequent measuring in the wet way.

If in a discharge of such kind there be found a cask not entirely filled with the respective product, the contents are

to be supplemented, so that the depth of the empty space at the bunghole shall not be more than 6 centimeters. If this can not be done, then the contents are to be ascertained according to section 10 of Conradi's "Instruction to ascertain the liter capacity of distilling and brewing utensils," etc., referred to in section 15 of the instruction. If the product to be discharged is contained in bottles, it suffices to determine the quantity of liters of the whole item by sample measurements of the bottles if they are approximately equal in size.

7. On the basis of the ascertained true strength of the example tested, and of the quantity of liters of the whole item ascertained by way of sample, if necessary, the quantity of liters of pure alcohol contained in the item is then to be properly calculated with the aid of Tables 7 and 2 of the regulations of section 16, paragraphs 2 and 3, of the instructions. The calculations are to be added to the discharge paper so far as is necessary for reexamination.

Appendix R 1.

Application for methylation of spirits (for all tradespeople, etc., exclusive of the manufacturers of vinegar).

[Previous register: Account book of distillery No. ——. Receipts register of bills of lading for spirits No. ——. Register of warehouse for spirits No. ——. Account register of the rectifying establishment No. ——. This report has this day been filed and entered under No. —— into the methylation register. ———, the —— day of ———. ——— office.]

To the ——— at ———, the undersigned report the spirits described on the following table for methylation by ———. The methylation shall take place ———, the ——— day of ———, 18—.

——— ———.

INSTRUCTIONS.

1. One blank is to be used only for methylations of the same kind. The first five columns are to be filled by the applicant, the others by the revenue inspectors.

2. To columns 6 and 8: In every case when the gross and net weight of a cask are ascertained fractions of a kilogram less than half a kilogram are not to be counted, but if they exceed half a kilogram they are to be counted as half a kilogram.

3. The revenue inspectors shall indicate by placing letters *a* or *b* before the dead weight ascertained which of the two kinds of ascertaining the dead weight designated in column 7 shall be used.

4. To column 13: Whenever a quantity of liters is ascertained fractions of a liter amounting to less than half a liter are to be dropped in the final sum, otherwise they are to be counted as a whole liter.

5. To column 14: The quantity of methylation substance calculated according to the respective percentage is to be

rounded off for the purpose of methylation in such a way that—

(*a*) In the case of the general methylation substance, pyridine bases, oil of turpentine, and sulphuric ether fractions of a liter up to 0.5, inclusive, are to be counted as 0.5 of a liter, and larger fractions of a liter as one liter.

(*b*) In the case of animal oil at least one-twentieth of a liter shall be counted and every part of one-twentieth of a liter shall be counted as a whole twentieth of a liter.

Serial number.	I. Notice.				II. Findings of the inspection.								III. Methylation under revenue control.		IV. Statement of the revenue officers, whether the methylated spirits have provably been subjected to the mash-tub tax or material tax.
	The packages.				The casks.				The spirits.						
	Mark.	Number.	Dead weight established by the gauge office (kilograms).	Quantity of pure alcohol (liters).	Gross weight (kilograms).	Dead weight ascertained (a) by weighing by the revenue office; (b) by the gauge office (kilograms).	Net weight after the deduction of the— Dead weight officially ascertained (column 7) (kilograms).	Net weight after the deduction of the— Normal dead weight (kilograms).	Apparent strength in per cents of weight (per cents).	Grades of temperature according to Celsius.	True strength in per cents of weight (per cents).	Quantity of pure alcohol (liters).	The quantity of pure alcohol (column 13) is mixed with (liters).	Remarks of the revenue officers, especially in relation to the methylation substances (revenue official fastening of the vessels, quality of the materials).	
1	2	3	4	5	6	7	8	9	10	11	12	13	14	15	16

APPENDIX R 3.

Account book of ———, at ———, relating to accession and removal of methylated spirits.

[This book contains —— folios, which have been fastened by a cord sealed hereon by the undersigned. This book is to be preserved. ———, the —— day, ———.]

INSTRUCTIONS.

1. The account book relating to the preparation and use of the methylated spirits according to this model is to be kept—

A. By manufacturers who are permitted to cause spirits to be methylated for their own industrial use instead of with the general methylation substance, with (*a*) pyridine bases, (*b*) wood spirits, (*c*) turpentine, (*d*) animal oil, (*e*) sulphuric ether, (*f*) shell-lac solution or other special substances except vinegar.

B. By those dealers and manufacturers who cause spirits to be methylated with the general methylation substance and who are specially required to keep an account book.

If a manufacturer causes to be prepared methylated spirits of several of the kinds indicated, then the entry is made for every kind, according to the determination of the revenue authorities, either in a special account book or in a special division of the same account book.

2. The entries under "I. Accession" are to be made by the first discharge officer every time immediately after the completion of the methylation, according to the data called for in the respective columns of the application and respectively in column 5 with the aid of the calculating Table No. 6, adding the signature in column 8 of the account book.

3. To columns 5 and 7: Whenever quantity of liters is to be ascertained, then any fractions of a liter that may appear in the final sum, if they are less than half a liter, are to be dropped, otherwise they are to be counted as a whole liter.

4. Under "II. Removal," columns 9 to 12 are to be filled by the manufacturer on the day on which the item in question is taken for use from the reported place of storage.

The filling of columns 13 and 14 is required only in the case of spirits methylated otherwise than with the general methylation substance. The entry need not be made for every item booked in columns 9 to 12, but it must be made at the latest at the close of every quarter, according to the total results. The date of entry is to be marked in column 15.

5. At the end of every quarter the account book is to be closed within the next three days in columns 7 and 11.

APPENDIX R 4.

I. Accession of methylated spirits.									II. Removal of methylated spirits.								
	Of methylation.		Of the methylated spirits.							A. Withdrawal for use.				B. Results of the use.			
										The entry.							
ial ber.	Month.	Day.	Net weight (according to column 8 or 9 of the application) (kilograms).	True strength in per cents of weight (according to column 12 of the application) (per cents).	Volume (liters).	Volume of the admixtures (according to column 14 of the application) (liters).	Volume of the mixture (liters).	Annotation of the name of the supervising revenue officer.	Serial number.	Month.	Day.	Volume of the methylated spirits withdrawn (liters).	The withdrawn methylated spirits shall be used for.	Upon the quantity withdrawn (column 11) there are to be distributed in produce (column 12) kilograms (kg.) liters (l.).	Consumption of methylated spirits by each 100 kilograms or each 100 liters of the produce, according to columns 11 and 13 (liters).	Notes of the holder of the account.	Notes of the revising revenue officer.
	2		3	4	5	6	7	8	9	10		11	12	13	14	15	16

APPENDIX R 5.

Application for methylation of spirits (for manufacturers of vinegar).

[Previous register: Account book, distilling No. ——. Receipt register of bills of lading of spirits No. ——. Register of warehouse for spirits No. ——. Account register of the rectifying establishment No. ——. This report has this day been filed and entered under No. —— into the methylation register. ———, the —— day of ——— 18—. ——— office.]

To the ——— at ———, the undersigned report the spirits described on the following table for methylation by mixing with water and vinegar.

———, the —— day of ——— 18—.

——— ———.

INSTRUCTIONS.

1. The first five columns are to be filledby the applicant, the others by the revenue inspectors.

2. The revenue inspectors must convince themselves each time that the vessel in which the mixture of the spirits with water and vinegar is to be undertaken is either empty or filled only with water.

3. To columns 6 and 8: Whenever the gross and net weight of a cask are ascertained fractions of a kilogram less than half a kilogram are to be dropped, but if they are more than half a kilogram they are to be counted as half a kilogram.

4. The revenue inspectors by prefixing the letter *a* or *b* before the ascertained dead weight shall indicate which of the two methods of ascertaining the dead weight indicated in column 7 has been employed.

5. To columns 13 and 14: Whenever quantity of liters is ascertained fractions of a liter appearing in the final sum if they are less than half a liter are to be dropped, otherwise they are to be rounded off to a whole liter.

Serial number.	I. Application.				II. Findings of the inspection.									III. Methylation under revenue control.					IV. Statement of the revenue officers whether the methylated spirits have provably been subjected to the mash-tub tax or material tax.
	The packages.			Quantity of pure alcohol (liters).	The packages.				The spirits.					Of water there are to be admixed (liters).	Of the liter quantity of water (column 15) there is to be deducted the difference between the statements of columns 13 and 14 with (liters).	The quantity of spirits (column 13) accordingly has been mixed—		Annotations of the revenue officers, especially in relation to the methylation substance.	
	Mark.	Number.	Dead weight ascertained by the gauge office (kilograms).		Gross weight (kilograms).	Dead weight ascertained (a) by weighing by the revenue office; (b) by the gauge office (kilograms).	Net weight after deduction of the— Dead weight officially ascertained (column 7) (kilograms).	Net weight after deduction of the— Normal dead weight (kilograms).	Apparent strength in percentages of weight (per cents).	Grades of temperature according to Celsius.	True strength in percentages of weight (per cents).	Volume (liters).	Quantity of pure alcohol (liters).			With water (or beer, yeast water, natural wine) (liters).	With vinegar (liters).		
1	2	3	4	5	6	7	8	9	10	11	12	13	14	15	16	17	18	19	20

CENTRAL SHEET FOR THE GERMAN EMPIRE.

ADMINISTRATION OF INTERIOR,
Berlin, Friday, December 20, 1887.

1. TARIFF AND REVENUE MATTERS.

The Federal Council in its meeting of December 5, of this year, in pursuance of the provision under No. 8 of the enactment of June 21 of last year relating to the methylation of spirits (see Central Sheet for 1888, p. 227), enacted as follows:

(*a*) Spirits employed in the production of varnishes and polishes are hereby exempted from tax, provided that such varnishes and polishes are not used in the producer's own industry, but are intended for commerce, and only upon condition that they shall contain at least 10 per cent of shell-lac or other resin.

(*b*) In ascertaining the shell-lac or other resin content, which shall be done in cases of doubt, the instructions printed below will be followed.

IMPERIAL CHANCELLOR.
Represented by: FREIHERR VON MALTZAHN.

BERLIN, *December 18, 1889.*

Instructions for the investigation of varnishes and polishes to ascertain the presence of the prescribed resin content.

Ten grams of the liquid to be tested shall be heated on the water bath till the alcohol has evaporated, and thereupon shall be heated in the dry closet for two hours, at a temperature of 100 to 105 degrees, whereupon at least 1 gram of solid residue must remain.

CENTRAL SHEET FOR THE GERMAN EMPIRE, PUBLISHED IN THE IMPERIAL OFFICE OF THE INTERIOR.

Change in the regulation governing the testing of the content of alcohol in spirits.

BERLIN, *Friday, April 4, 1890.*

The Federal Council at its meeting of March 8, of this year, resolved that the following changes be made:

1. In Appendix C to the provisional executive regulations to the spirit tax law of June 24, 1887 (Central Sheet for 1888, p. 80)—

(*a*) Under No. 1, paragraph 2, strike out the following: "Spirits of at least 40 per cent of average alcoholic content," and insert the words, "Spirits with an average alcoholic content of at least 34 per cent of weight."

(*b*) Under No. 9, paragraph 3, in the closing sentence, strike out the following: "Strengths below 40 per cent," and insert the words, "Strengths under 34 per cent of weight."

(*c*) Under No. 29, paragraph 2, strike out the following: "Spirits of less than 40 per cent of average alcoholic content" and insert the words: "Spirits of an average alcoholic content of less than 34 per cent of weight."

2. In the instructions for testing the vinegar admitted as a methylating substance (Appendix R 6 to the provisional executive regulation to the spirit tax law of June 24, 1887, Central Sheet for 1887, p. 436), strike out the following: "Spirits of at least 95 per cent of Tralles" and insert the words: "Spirits of at least 93 per cent of weight."

3. In the ordinances relating to the methylation of spirits (Central Sheet for 1888, p. 227), under No. 9, strike out the following: "Alcohol of 95 per cent" and insert the words: "Alcohol of 93 per cent of weight."

4. In the note to "Fusel oils," on page 110 of the official list of goods, strike out the following: "Fusel oils with an alcoholic content of 10 per cent of volume and over" and insert the words: "Fusel oils with an alcoholic content of 8 per cent of weight and over."

THE IMPERIAL CHANCELLOR.
Represented by: FREIHERR VON MALTZAHN.

BERLIN, *March 31, 1890.*

CENTRAL SHEET FOR THE GERMAN EMPIRE.

Regulations for the untaxed employment of unmethylated spirits for medicinal, scientific, and industrial purposes.

BERLIN, *December 16, 1892.*

I. General provisions.
(*a*) Application for relief from taxation, prerequisites and decision.

SECTION 1. Any person desiring to use unmethylated spirits for medicinal, scientific, or industrial purposes, with the privilege of exemption from tax, must make written application therefor to the main office of the district. In this application he should state each separate purpose for which the unmethylated spirits free from tax are to be used and to set forth the mode of employment. In the case of druggists it will suffice to state that the spirits are to be used in their drug store business. (Sec. 17, Introduction.)

The applicant furthermore must state the prospective yearly demand and the place of storage of the spirits; also on demand to show that the use of methylated spirits for the purposes in question is impossible. If in the course of manipulation the spirits are to be recovered, this also must be stated in the application.

After examining into the question of need, the directive authorities, if the case admits it, may grant the privilege, stating the various purposes mentioned in the application for which unmethylated spirits are to be used exempt from tax, reserving the right to repeal at any time.

As soon as unmethylated spirits are to be used exempt from tax for other purposes than those for which permission has been granted, the authorization of the directive authorities must first be sought, stating these purposes and the intended mode of employment.

SEC. 2. Persons who do not enjoy the confidence of the revenue authorities are to be denied the privilege.

Persons who wish to retail spirits or are now engaged in trade therewith, or wish to engage in such trade, shall be granted the privilege, with the exception admitted in section 17, under No. 8, only on condition that the untaxed employment of the unmethylated spirits shall be officially superintended (sec. 10), and the storage and the working up of the spirits exempt from tax and of the spirits on which the tax or tariff has been paid, as also the storage of the product manufactured out of the two kinds of spirits, shall take place in separate rooms.

SEC. 3. The permission for the untaxed employment of unmethylated spirits is also to be denied if the annual demand for medicinal and scientific purposes is less than 25 liters, and for industrial purposes less than 50 liters of pure alcohol.

SEC. 4. For such products for which from the nature of the case it is to be assumed that they will serve for human consumption, the authorization for untaxed employment for unmethylated spirits shall not be granted.

For spirits which are only indirectly employed for medicinal, scientific, or industrial purposes, for example, for cleansing the bottles and other utensils serving for these purposes for the investigation of chemicals, drugs, bandages, etc., intended for medicinal and other purposes, as well as for the production of spray and for the polishing of pieces of soap, no exemption from tax will be granted. In public hospitals, however, unmethylated spirits may be used free of duty for heating the inhalation apparatus, for the production of spray, and for the disinfection of the operators, the instruments, and the operating room.

SEC. 5. The exemption from tax may be claimed for spirits of any alcoholic strength.

(b) Discharge and storage of spirits.

SEC. 6. The discharging of spirits for untaxed purposes must be done at the revenue office, or upon application of the person entitled thereto, in his office room, and as a rule by two revenue officers, but in case of discharge in the office room of the person entitled the presence of a second officer may be dispensed with, and the discharge may be performed by a chief officer alone. Amounts of not more than 1 hectoliter of pure alcohol may also be discharged by another than a chief officer.

For medicinal and scientific purposes no less quantity than 25 liters and for industrial purposes no less quantity than 50 liters of pure alcohol may be presented for discharge. Exceptions may be granted by the main office in special cases.

SEC. 7. In case the spirits are not employed immediately after discharge they must always be kept in the same vessels, and at a definite place separated from any unmethylated,

or taxed, or tariff spirits that may be present. The vessels must be gauged, or officially weighed, or measured by the wet way, and all fixed vessels must furthermore be furnished with a device to be tested by the chief comptroller of the district which will permit the quantity of spirits therein contained to be always seen even if the vessel is only partially filled. The directive authorities may grant exceptions to the regulations relating to the arrangement of the vessels.

If several vessels serve for storage each must be distinctly marked, and the marking must be kept always intact.

Whether a closure must be applied to the various vessels until their contents are to be employed is to be decided by the chief comptroller of the district.

(c) Employment of the spirits and supervision of the employment.

SEC. 8. The employment of untaxed spirits for other purposes than those for which it is allowed is not lawful. If in the course of manufacture spirits are recovered, they can also be employed anew only for the purposes allowed. The recovery may be subjected to official supervision under the discretion of the directive authorities.

It is unlawful to dispose of the spirits to a third party in a raw state. Exceptions may be granted in special cases by the directive authorities.

SEC. 9. The directive authorities shall decide in what cases, with regard to mode of the employment of the spirits or to the extent of manufacture or to other special conditions, the business of the applicant in regard to the employment of spirits is to be subjected to official supervision. A corresponding remark is to be entered in the ordinance of authorization. (Sec. 1, par. 3.)

SEC. 10. If it is ordered that the operations be supervised, the following special regulations shall apply:

(*a*) The manufacturer must present to the main office a duplicate description of the process of manufacture from which it may be seen what material besides unmethylated spirits is used for the production of the various manufactures and within what time spirits were introduced in the manufacture. The manufacturer shall not be required to name such ingredients which he desires to keep secret.

One copy of the description provided with the inspection mark of the main office is to be returned to the person entitled, while the other copy remains among the archives at the main office. The copy which is returned is to be kept by the person entitled with the balance book. (Sec. 11.)

(*b*) The vessels serving for storing the spirits must always be kept under revenue closure.

(*c*) The manufacturer desiring to employ spirits has to notify the levying office of the hour of the intended employment at least one day in advance, early enough to enable an officer to be sent, and at the same time he has to state the quantity of the spirits to be employed.

(*d*) The inspecting officer loosens the official fastening, superintends the taking out of spirits from the various casks or vessels, takes care that the fastening be reapplied, and supervises the mixing of the spirits with the other

materials intended to be employed. It suffices to supervise the mixing with some of these materials if it is beyond doubt that the spirits by this mixture are rendered unfit for human consumption and their reelimination seems to be excluded.

Concerning the employment of the spirits, the inspecting officer must give a certificate in the balance book.

(*e*) If the officer does not appear at the hour indicated the manufacturer is authorized to remove the fastening himself, in the presence of a credible witness, and to employ the reported quantity of spirits. The levying officer must take care that the fastening be renewed within the shortest possible time.

The directive authorities are empowered, for special reasons, to order departures from the preceding regulations.

(*d*) Bookkeeping and payment of tax.

SEC. 11. Relating to the receipt and use of the spirits, the person entitled must keep a balance book, to be always kept ready for the inspection of the revenue officers, according to Appendix 1, by years, from the 1st of April to the 31st of March. In this book the various items of spirits are to be entered immediately upon receipt, and the quantities used are to be marked "discharged," immediately after taking out, being entered separately, according to the purposes for which they are used.

Appendix 1.

The correctness of the entry of accession is to be certified by the discharging officers.

The levying office is to keep a corresponding book in which, for all the persons entitled within the district, the accessions are to be entered separately, while the removals are to entered in total on the basis of the balances concluded.

The balance book shall be closed every year by the person entitled and be sent to the levying office after a chief officer has established in that book the quantity of pure alcohol used during the year.

On the basis of the closed and verified balance book the levying office draws up an exhibit, according to Appendix 2, relating to the quantity of unmethylated spirits used in the levying district for which the drawback of the mash-vat or material tax is claimed and sends this exhibit, with the balance book, as vouchers to the main office concerned. The main office will draw up a liquidation relating to the drawback of mash-vat or material tax to be paid, using the blank, Appendix R 8 of the regulations relating to the exemption from taxation of spirits for industrial and other purposes, and will submit it to the directive authorities, together with exhibits and balance books.

Appendix 2.

Amounts of mash-vat tax of less than 1 mark are excluded from drawbacks.

For larger establishments the directive authorities, upon application of the owner, may prescribe that the closing of the balance book and the liquidation of the tax drawback shall take place in shorter periods.

SEC. 12. Spirits that are recovered in the course of manufacture are to be entered as accession in the balance book with the express designation as recovered. The tax draw-

back is to be granted for such spirits after the first employment; the directive authorities must issue appropriate orders in order to exclude another liquidation of the tax drawback.

SEC. 13. The directive authorities may order that the person entitled shall keep, besides the balance book, a special book of manufacture, which shall give evidence relating to the receipt and the working up of the spirits as well as concerning the disposal of the various products obtained.

(c) Revenue supervision and taking of stock.

SEC. 14. The inspecting officers are empowered, for the purpose of revenue inspection, to enter the rooms in which the methylated spirits are worked up or stored at any time during working hours, but otherwise from 6 o'clock in the morning to 9 o'clock in the evening. The utensils requisite for the purpose of inspection are to be kept ready by the manufacturer and the necessary assistance is to be furnished.

Furthermore, the chief officers of the revenue administration are authorized to inspect the manufacture and business books of the person entitled, to demand that the stock of goods in the production of which unmethylated spirits have been used exempt from tax shall be shown to them, and to take samples for investigation.

SEC. 15. The establishments in which unmethylated spirits are used exempt from tax are to be inspected at least once a month. The inspection as a rule should take place at least once in a quarter by a chief officer. The directive authority may reduce the number of inspections for smaller establishments.

At least every half year an official taking of stock of the supplies on hand of untaxed unmethylated spirits is to be made. For this purpose the manufacturer must on demand present an extract from the balance book which shows the stock of unmethylated spirits that ought to be present according to the books. In case of discrepancies between the stock that is and the stock that ought to be present amounting to 10 per cent of the actual stock ascertained at the last taking of stock and the new accessions, the instituting of penal procedure may be dispensed with at the discretion of the main office. In every case, however, for deficits of more than 1 per cent of the quantity of spirits above named, the consumption tax and any additional tax is to be levied according to the lowest rate concerned. If the stock that ought to be present includes both spirits that have been subject to the mash-vat or material tax and such spirits that have not been subject to either tax, then the deficit is first of all to be put down to the account of those spirits that have been subject to the mash-vat or material tax.

The preceding regulations do not apply to pharmacies.

II. Special ordinances.

(a) For institutions serving public interests.

SEC. 16. For institutions serving for the purpose of the empire, the states, the districts, the communalties, or for public utility, the chief financial authorities of the country may grant alleviations in the procuring, in the discharging, and in the supervision of the untaxed employment of the

unmethylated spirits. The same favor may be granted to private establishments that have orders to furnish spirits for the empire or for the state for such orders.

(b) For pharmacies.

SEC. 17. For the untaxed employment for the methylated spirits in the pharmacy, so far as it concerns pharmaceutical operations proper, including the demand for scientific purposes, and not the production of medicines to be disposed of to retailers, the following special regulations are to be applied:

1. For every pharmacy that claims exemption from tax the annual quantity needed is fixed by the directive authority after taking the evidence of an expert on the basis of the average annual requirements of that pharmacy. The books serving to ascertain the annual requirement are to be submitted by the pharmacist to the expert on demand.

In the average annual demand those quantities of spirits used in producing such preparations as do not enjoy exemption from taxation—No. 2—are not to be included.

The amount once fixed is subject to reexamination every three years. In the meantime also it may be changed at the desire of the authorities or upon a well-grounded application of the pharmacist.

The pharmacist may receive spirits exempt from tax up to the limit of the annual quantity fixed within one year—from the 1st day of April to the 31st day of March.

2. In the pharmaceutical operations all alcoholic preparations serving for medicinal purposes—with the exception of those mentioned in Appendix 3, as well as with the exception of all secret medicines—may be produced exempt from tax with unmethylated spirits.

Appendix 3.

Spirits of wine and diluted spirits of wine may be produced by the pharmacist from unmethylated spirits exempt from tax if they are to serve in the pharmacy itself for the preparation of other pharmaceutical products not mentioned in the list.

A copy of Appendix 3, as well as of the prohibition of the untaxed preparation of secret medicines from unmethylated spirits, is to be hung up in a distinctly visible place in the laboratories of the pharmacies, according to the detailed directions of the chief comptroller of the district.

3. Pharmacists who own several establishments may be granted, as the case may require, an annual quantity of untaxed unmethylated spirits either for the main pharmacy and for each of the branch establishments especially or only for the main pharmacy. In the latter case they are allowed to issue untaxed unmethylated spirits in unelaborated condition from the main pharmacy to the branches.

4. The final discharge of the spirits transmitted with shipment certificate 1, etc., for untaxed employment for medicinal purposes in case the shipment does not exceed 1 hectoliter of pure alcohol, and in case the addressee expressly applies for redetermination of the quantity of liters of pure alcohol, is to be restricted in cases where there exists no suspicion to the external inspection of the package, and to the removal of the official fastening previously applied, assuming that the determinations have previously

been officially made. In such cases the whole quantity of spirits transmitted is placed under the accession to the pharmacist.

5. The receipt of untaxed unmethylated spirits must be entered in the balance book according to the provisions of section 11, paragraphs 1 and 2; on the other hand, columns 15 to 25 of the balance book intended to show the consumption remain unfilled.

The annual demand determined for each pharmacist is to be entered in the balance book.

At the close of each year a chief officer sums up the quantity of spirits entered in the balance book, ascertains the stock of spirits on hand, calculates from this the quantity of pure alcohol employed during the year, and enters the remainder in the balance book of next year as accession.

The balance book of the expired year is thereupon to be sent by the pharmacist to the levying office after he has certified therein to the best of his knowledge and conscience that the quantity of spirits entered as accessions, but no longer found present when stock was taken, was employed by him exclusively for such pharmaceutical preparations for which exemption from taxation of spirits is granted, or for scientific purposes.

The levying office proceeds with the balance book further according to the regulations of section 11, paragraph 5.

6. When a pharmacist in the course of the year stops or gives up his business he has to pay the consumption tax and any addition on the quantity of spirits entered in the balance book which exceeds the quantity of the annual demand corresponding to the time of the continuance of his business, or for the actual quantity employed if it be less than the proportional quantity.

The levying of tax, however, is to be dispensed with if the new owner of the pharmacy causes the remaining spirits in the possession of his predecessor to be entered to the credit of the annual demand claimed by him as exempt from tax.

The quantity of spirits for which subsequently the tax must be paid, or which does not find employment, is left unregarded in drawing up the exhibit. (Sec. 11, par. 5.)

7. By special order of the directive authorities some pharmacists may be required permanently or for a definite period to keep running entries in columns 15 to 25 of the balance book, also relating to the use of the unmethylated spirits exempt from tax; on the other hand, sections 9 and 10 do not apply to pharmaceutical operations proper.

8. In the case of pharmacists who wish to retail liquor over the counter or carry on a retail trade in liquor, the granting of the use of unmethylated spirits exempt from tax for medicinal and scientific purposes by the directive authorities may be made dependent upon the condition that the storage and further elaboration of the spirits exempt from tax and of the spirits on which the tax or tariff has been paid, as also the storage of the goods produced from the two kinds of spirits, shall take place in separate rooms, and that the pharmacist shall assume the duty of keeping

an account of the use of the annual quantity of spirits exempt from tax fixed in his case according to No. 7, as well as an account of the procuring and using of the spirits on which tax or tariff has been paid.

9. Pharmacists who, besides the pharmaceutical business proper, produce preparations suitable for medicinal purposes in order to dispose of them to other manufacturers are not subject in regard to this matter to the provisions of this section, but to those of sections 1 to 15 and 18.

10. Physicians who are authorized to keep a portable medical drug chest are subject, in regard to the use of unmethylated spirits exempt from tax in the portable chest, to the provisions relating to pharmacies, but with the proviso that sections 3 and 6, paragraph 2, shall not apply to them.

(a) For medicine factories.

SEC. 18. Makers of medicines (druggists, etc.) are allowed to produce free of tax with unmethylated spirits alcoholic preparations suitable for medicinal purposes, with the exception of those mentioned in Appendix 3 as well as with the exception of all secret remedies.

Section 17, No. 2, paragraphs 2 and 3, finds suitable application to the operations of medicine factories.

In case the supervision of the mixture of untaxed unmethylated spirits exempt from tax with the other materials intended to be used has been ordered (sections 9 and 10) the additional materials must be tested as feasibly as possible in regard to their quality, and it is furthermore to be insisted that the quantity of additional material shall exactly correspond to the proportion prescribed in the materia medica of the German Empire for the preparation of the medicines in question.

III. Penalty.

SEC. 19. The violation of the preceding regulations, unless subject to another penalty, are punished with a fine according to section 3 of the law relating to the exemption from tax of spirits for industrial purposes of July 19, 1879, section 26 of the law relating to the taxing of spirits of June 24, 1887, and Article II, No. 2, of the law of June 8, 1891; the directive authorities may also withdraw the permission to use unmethylated spirits exempt from tax.

APPENDIX 1.

[District of the main office ——. Levying office ——.]

Balance book of ———, in ———, over the accession and decrease of unmethylated spirits which are intended for use exempt from tax for the ———, 18—.

This book contains —— folios, which have been fastened by a cord sealed hereon by the seal of the undersigned. This book is to be preserved ———. The storage room of the spirits is located ———.

———, the —— of ———, 18—.

NOTE.—Entries in column 25 of the balance book are to be made then only when the official supervision of the operation is ordered. Secs. 9 and 10 of the regulations.

Accession (receipt) of unmethylated spirits.														Decrease of unmethylated spirits.										
Serial number.	Date of entry.	Denomination, number of the official pass bills, and name of the office issuing the same.	The casks.		The spirits.				Statement of the rate (a) of the consumption tax; (b) of the addition thereto.	Number of the vessel in storage, if any.	Annotation of the name for confirmation of the correctness of the entry—		Remarks.	Serial number.	Date of cancellation.	The spirits have been taken from the cask (storage vessel) (number).	Of the spirits taken out.			Of the quantity stated in column 20 a drawback of the mash-tub tax or material tax may be claimed for liters of pure alcohol.	The quantity of spirits taken out has been used for the production of—	The manufactures produced are further referred to in the—	Annotation of the name of the tradesman for confirmation of the correctness of the cancellation	Remarks and certificates by the discharging official relating to the use made of the spirits.
			Number.	Mark and number.	Net weight (kilograms).	True alcoholic strength in weight percentages (per cent).	Quantity of pure alcohol for which the mash-tub tax or the material tax— Has been paid (liters).	Has not been paid (liters).			Of the tradesman.	Of the discharging official.					Net weight (kilograms).	True alcoholic strength in weight percentages (per cent).	Quantity of pure alcohol (liters).					
1	2	3	4	5	6	7	8	9	10	11	12	13	14	15	16	17	18	19	20	21	22	23	24	25

APPENDIX 2.

[District of the main office, ———.]

Reference of the unmethylated spirits applied to medicinal, scientific, and industrial purposes in the district of ———, office in ———, for the ———, 18—.

Serial number.	The tradesmen's		Quantity of the spirits used, for which drawback is to be granted (liters of pure alcohol).	Number of the vouchers.	Remarks.
	Name.	Residence.			
1	2	3	4	5	6

APPENDIX 3.

List of those alcoholic preparations suitable for medicinal purposes in the preparation of which unmethylated spirits may not be employed exempt from tax.

Aquæ dentifriciæ alcoholicæ	Alcoholic tooth and mouth washes, and tooth tinctures of all kinds.
Spiritus	Spirits of wine.[1]
Spiritus absolutus (alkohol absolutus)	Absolute alcohol.
Spiritus æthereus	Hoffman's drops.
Spiritus calami	Spirits of calamus.
Spiritus carvi	Spirits of cumin.
Spiritus cinnamomi	Spirits of cinnamon.
Spiritus dilutus	Dilute spirits of wine.[1]
Spiritus formicarum	Spirits of ants.
Spiritus juniperi	Spirits of juniper.
Spiritus melissæ	Spirits of melissa.
Spiritus melissæ compositus	Carmelite spirits.
Spiritus menthæ crispæ	Spirits of crisp mint.
Spiritus menthæ piperitæ	Spirits of peppermint.
Spiritus myristicæ	Spirits of nutmeg.
Spiritus vini arac	Arrack.
Spiritus vini cognac (spiritus e vino)	Cognac.
Spiritus vini Gallici	French brandy.
Spiritus vini rum	Rum.
Tinctura absinthii	Tincture of wormwood.
Tinctura aloes composita	Compound tincture of aloes.
Tinctura amara	Bitter tincture.
Tinctura aromatica	Aromatic tincture.
Tinctura aurantii	Tincture of orange.
Tinctura aurantii fructus immaturi	Tincture of orange from unripe fruit.
Tinctura calami	Tincture of calamus.
Tinctura calami composita	Compound tincture of calamus.

[1] Spirits of wine and dilute spirits of wine may be produced by the person entitled from unmethylated spirits exempt from tax in so far as they are intended to serve in the pharmacy, medicine factory, etc., in the preparation of other pharmaceutical products not mentioned in the above list. (Sec. 17, No. 2, par. 2, and sec. 18, par. 2, of the regulation.)

Tinctura capsici	Tincture of capsicum.
Tinctura cardamoni	Tincture of cardamon.
Tinctura caryophylli	Tincture of cloves.
Tinctura chinæ (cinchonæ, quinquinæ)	Tincture of quinine (cinchona).
Tinctura (cinchonæ, quinquinæ composita).	Compound tincture of quinine (cinchona).
Tinctura cinnamomi	Tincture of cinnamon.
Tinctura galangæ	Tincture of galangal.
Tinctura gentianæ	Tincture of gentian.
Tinctura gentianæ composita	Compound tincture of gentian.
Tinctura limonii	Tincture of lemon.
Tinctura macidis	Tincture of nutmeg (mace)
Tinctura menthæ crispæ	Tincture of crisp mint.
Tinctura menthæ piperitæ	Tincture of peppermint.
Tinctura santalini	Tincture of sandalwood.
Tinctura vanillæ	Tincture of vanilla.
Tinctura zingiberis	Tincture of ginger.
Tinctura zingiberis fortior	Strong tincture of ginger.

Furthermore, all articles which undoubtedly serve for fruition, for example, liquors, essences for the manufacture of liquors, bitter brandies, peppermint, pastils. and the like.

CENTRAL SHEET FOR THE GERMAN EMPIRE PUBLISHED IN THE IMPERIAL OFFICE OF THE INTERIOR AT BERLIN, DECEMBER 20, 1895.

1. CUSTOMS AND REVENUES.

The Federal Council in its session of to-day resolved as follows:

1. On and after the 1st day of January at the exportation of fluid, alcohol-containing perfumeries, as also of alcohol-containing head, tooth, and mouth washes, a drawback of the spirit tax in accordance with the inclosed regulation shall be granted.

2. From the same date on the provisions of the agreement of the 31st day of March to 14th day of April, 1858, made between the Governments of the Kingdom of Prussia and the Grand Duchy of Luxemburg, shall find application upon the commerce with the above-designated articles (merchandises), commodities, between the spirits-tax union and the Grand Duchy of Luxemburg.

THE CHANCELLOR OF THE EMPIRE,
Represented by COUNT OF POSADOWSKY.

BERLIN, *December 19, 1895.*

Regulations for the drawback of the spirits taxes at the export of fluid, alcohol-containing perfumeries, as also of alcohol-containing head, tooth, and mouth washes.

A. Drawback rates.

SEC. 1. At the exportation of fluid, alcohol-containing perfumeries, as also of alcohol-containing head, tooth, and mouth washes, that are found in free commerce, there shall be allowed a drawback of the mash-tub or material tax with 0.1601 mark, of the consumption tax with 0.70 mark, of the distilling tax with 0.06 mark, for each liter of pure alcohol contained in the exported manufactures.

There is no necessity for proof thereof that the spirits from which the manufactures have been produced have been subjected to the mash-tub or material tax.

B. Conditions for the granting of drawback.

SEC. 2. The drawback of tax shall be granted to those industrials only who enjoy the confidence of the revenue board and keep reglementary commercial books. It may also be claimed solely for the perfumeries, etc., produced by themselves.

SEC. 3. He who intends to export into a foreign country perfumeries, etc., with the claim upon drawback of tax must ask in writing the permission thereby from the relative main office, and thereby file in duplicate form an operation declaration in which there must be stated—

(*a*) What several kinds of perfumeries, head, tooth, and mouth washes (sec. 1) are about to be exported.

(*b*) To how much the true alcoholic strength of the spirits contained in each of these manufactures does amount (weight per centums or volume per centums).

(*c*) In what inner inclosings the exportation of the several manufactures is made, and according to what the alcoholic strength of the manufactures is stated, either according to weight per centums or according to volume per centums, what weight or what volume, quantity in perfumeries, etc., the packages to be applied contain.

(*d*) How the standing vessels are designated from which the several manufactures are taken.

(*e*) In what rooms the packages to be sent abroad with the mail are made ready for shipment.

(*f*) Whether the manufactures not going out with the mail shall be presented and dispatched at the place of the office or in the industrial establishment.

The petitioners at the same time must enter upon the express obligation that they, if the case may happen, subject themselves to the conventional fines provided in section 19, thereby waiving legal process.

The statements provided in paragraph 1, under *c*, must be made in whole and hundred parts, or even thousand parts, of kilograms or liters, and may be made jointly for a greater number up to twelve packings of the same kind of wrappings.

If in one of the points to which the statements under *a* to *f* refer changes should be intended, then they must be reported in writing in duplicate issuance to the main office before their execution.

SEC. 4. There shall be denied to industrials, who export perfumeries, etc., with the claim upon drawback of the taxes, the use of unmethylated spirits exempt from duty for healing, scientific, and industrial purposes, as also the procuring and using of methylated spirits in their management, operation, and the trade in methylated spirits; also the procuring of alcohol containing manufactures that have been produced from spirits methylated or otherwise dispensed exempt from duty.

Therefrom shall be excepted the working of those supplies of spirits that have been dispensed to them exempt from duty before the 1st of January, 1896, for the purposes

of the manufacturing of perfumeries, and the use, exempt from duty, of spirits for the production of soaps. The latter, till upon further disposition, may be allowed upon the condition that the use of the spirits for this purpose, in accordance with sections 9 and 10 of the regulations for use exempt from duty of unmethylated spirits for healing, scientific, and industrial purposes, is officially superintended.

The directive board shall be authorized to admit further exceptions under arrangement of appropriate measures of security.

SEC. 5. The granting of suggestions of a drawback of tax shall be done under reservation of the revocation at any time by the directive board, that in case of emergency may order for individual managements, especial controls being demanded by the revenue interests.

SEC. 6. The allowing of the export drawback in those cases in which the shipping is not made by mail (sec. 11) shall be dependent upon the condition that the manufactures enumerated in one notification with the claim upon tax drawback together do contain at least 3 liters of pure alcohol.

SEC. 7. The industrial establishments, to the possessors of which the exportation against tax drawback has been granted, are subject to inspection by the revenue office. All the rooms in which the keeping or treating of spirits, of alcohol containing manufactures, and of inclosings takes place may be entered during the working time by the revenue officials. The latter are authorized to revise the manufacturing books and the commercial books relating to the buying of spirits and to the alienation of perfumeries, etc., as also the invoices and other business papers, to inspect the supplies of spirits, of alcohol containing entire or half manufactures, as also of inclosings, and to perform those inspecting functions (alcoholizations, measurings, etc.) that are required in order to convince themselves of the keeping of the operation declaration. (Sec. 3, *a* to *c*.) The inspection into the recipes and the naming of the ingredients, which the industrial wishes to keep secret, can not be claimed.

SEC. 8. Of each kind of the inner inclosings coming into use an empty proof must be delivered to the revenue office, on which proof it has been made conspicuous up to what height the filling will be done. The inclosings delivered must be weighed or be measured by the revenue office, regard being had to the filling mark and secured against exchange. They may be preserved in the business or manufacturing rooms of the industrial, who thereupon for this purpose, according to a more detailed provision, must place at the disposition of the revenue office a receptacle to be taken under revenue closure.

C. Proceedings at the exportation of perfumeries, etc., against tax drawbacks.

SEC. 9. If manufactures for which tax drawback is claimed are sent abroad by mail, then the packages to be sent before they are removed from the rooms in which they have been made ready for transportation (sec. 3, *e*) must be entered upon a postal exit book, to be kept in accordance with Appendix 1 in quarterly sections. The entry upon col-

umns 1 to 13 shall be considered as notification for exportation. The industrial shall be liable for their correctness.

SEC. 10. A presentation of the single sendings by mail for inspection by the revenue office will not take place. 1. Postal commerce.

The revenue officials, at their inspections to be held according to more detailed provision of the directive board, must examine all the entries made upon the postal exit book, compare the same with the bills of lading, and control by way of sample the correctness of the statements relating to the alcoholic content and relating to the contents of the inclosings by examining the contents of the standing vessels from which the article sent has been taken, and by comparing the inclosings deposited and those found in the stock. The extent and the result of the ascertainments performed must be noted down by them at the prescribed place in the postal exit book. In case no objections arise therefrom (sec. 19) the statements of the consignor in the postal exit book must be uesd as the basis of the calculation of the tax drawback.

The revenue officials shall be authorized to keep back from being sent the packages made ready for shipment abroad, and by means of inspection (sec. 14 et seq.) establish the weight or the quantity and the alcoholic content of the manufactures therein contained.

SEC. 11. If the manufactures shall be exported against tax drawback, their shipment not being made by means of the mail, then a notice, for which Appendix 2 shall serve as an example, must be filed with the relative revenue office. The consignor must fill out the columns 1 to 10 of the notice, and shall be liable for the correctness of his statements. 2. Exportation in another manner.

If a duplicate of the bill of lading or a book abstract of sufficient distinctness and facility of being surveyed is added to the notice, then the single statements contained therein need not be repeated in the notice. The duplicates and abstracts may be prepared in the way of mechanical multiplication.

SEC. 12. Alcohol containing and alcohol not containing perfumeries, etc., must not be packed together in one and the same package to be exported under revenue control. In such cases the alcohol not containing perfumeries, etc., must be summarily enumerated in the exportation notice, according to kind and quantity, separately from the alcohol-containing manufactures.

SEC. 13. The packages reported for exportation must be presented for dispatch (discharge) by the revenue office; their exportation must be proved.

The inspection of the packages presented may be dispensed with.

If the inspection be dispensed with, then the export discharge shall be made under reservation of the ascertainments subsequently to be performed in accordance with section 10, paragraph 2.

The extent and the result of the same must be noted down in the discharged export notices, which must be forwarded by the revenue office to the discharging officials.

In case no objections shall arise therefrom (sec. 19) the statements of the consignor made in the notice must be used as the basis of the calculation of the tax drawback.

SEC. 14. If an inspection of the packages presented be performed, then one or more pieces of all, or of some sorts, of the perfumeries, etc., reported and presented in packing ready for shipment, must be examined with regard to their alcoholic content and to the nonuse of methylated spirits, as also one or more pieces of all, or of some kinds of the inclosings enumerated in the notice must be compared with the sample bottles, etc., officially kept or weighed, respectively measured.

For a replacement of the bottles, etc., taken and opened by the discharging officials, supernumerary pieces of the single sorts may be presented along with the rest.

The weight or the quantity of the perfumeries, etc., destined for exportation, at the suggestion of the consignor, may be ascertained also in such manner that the official verifications are made at the time of the filling of the transportation vessels. In this case the filling of the transportation vessels and the packing of the same must be officially superintended. The superintending of the packing may also occur in order to establish the number and kind of the inclosings packed.

SEC. 15. In case of necessity the shipment of the perfumeries, etc., to be dispatched, for exportation in accordance with section 14, may be allowed even before the establishing of the alcoholic strength, after previous dispatch has otherwise been performed. In these cases the finding of the inspection must subsequently be made perfect. (Sec. 13, par. 3.)

SEC. 16. Upon the further treatment of the perfumeries, etc., dispatched, according to section 11 et seq., the regulations existing in the several Federal States relating to the export of spirits and manufactures of spirits shall find application under the rule that in cases of particular necessity by exception the application of the closures through one official may be allowed.

The dispatching at the boundary exit office shall be confined.

The shipment of the dispatched commodities from the dispatching office to the boundary exit office shall be made under inspection of the revenue office, and for a rule, under official closure of the room or under official escort. Package closure shall be admissible in so far only as the shipping of the manufactures is done in boxes, baskets, overcasks, and the like, which admit of the application of a lead seal by the revenue office.

The dispatching at the boundary exit office in unsuspicious cases shall be confined to the examination and removal of the seal applied by the revenue office as also to the comparison of the kind and of the designation of the packages with the corresponding statements made in the notification.

3. Ascertaining the alcoholic content.

SEC. 17. With perfumeries, etc., the alcoholic strength of which can be ascertained with sufficient surety by the

alcoholometer or by the distilling apparatus introduced for ascertaining the alcoholic content of mixed spirits, fruit juices, and the like, this verification shall be performed through the district revenue office or a revenue office authorized thereto by the directive board or through the discharging officials.

SEC. 18. With perfumeries, etc., the alcoholic strength of which can not be ascertained either by the alcoholometer or by the distilling apparatus designated in section 17, the establishing of the alcoholic strength shall be performed through a sworn chemist designated by the supreme financial board of the land, or upon the authorization of the same by the directive board for the performance of such examinations. For this purpose, by the dispatching officials in the presence of the consignor, samples must be taken and be kept under lock with the official seal after having been properly designated; the consignor may add his own seal thereto.

The trial must at the same time also be made, whether the perfumeries, etc., contain methylated spirits or the like made odorless by ingredients.

The expense of the investigation shall be charged to the consignor if the result should be that the alcoholic content falls short of the strength reported in weight per centums by more than 4 weight per centums, or of the strength reported in volume per centums by more than 4 volume per centums, or that methylated spirits have been used.

D. The consequences of incorrect reports.

SEC. 19. Should, by the investigations performed according to sections 10, 13, and 14, it be found that the alcoholic strength falls short of the strength reported in weight per centums by more than 4 weight per centums, or of the strength reported in volume per centums by more than 4 volume per centums, or that the contents of the bottles, etc., is by 10 or more per centums smaller than according to the statements of the consignor, then the shipment or with several kinds of perfumeries, etc., in a shipment the kind in question must be excluded from the drawback, and for each single case a conventional fine not exceeding 1,000 marks, against the industrial, must be pronounced by the directive board and collected in the way of administration, in addition to the eventual penal proceedings to be instituted along with it by virtue of the spirits tax law.

In the same manner a conventional fine not exceeding 10,000 marks shall be set upon each single case in which the directive board considers it proven that for the perfumeries, etc., presented for discharge with the claim upon tax drawback methylated spirits or spirits otherwise dispensed exempt from duty have been used irrespective (regardless) of the exception provided for the marking of spirits dispensed exempt from duty before the 1st day of January, 1896 (sec. 4).

The fines designated in paragraphs 1 and 2 shall not occur when according to the opinion of the directive board the contravention has been committed without the knowledge and intention of the industrial and without his being chargeable with gross negligence (oversight).

In the cases of paragraph 2 the industrial shall be deprived by the directive board of the permission to export perfumeries, etc., with the claim upon tax drawback.

E. Liquidation and accounting of the tax drawback.

SEC. 20. With regard to the liquidation and accounting of the tax drawback, sections 1 to 8 of the provisions for the execution of the law of June 16, 1895, approved by the resolution of the Federal Council of June 27, 1895, shall find application with that proviso that the drawbacks for manufactures brought to export by mail must quarterly be liquidated and established on the basis of the postal exit book.

The postal exit book must be concluded on the last day of the quarter, and forwarded on or before the 10th of the following month to the relative revenue office.

F. Production of perfumeries, etc., to be exported, in rooms securely closed in regard to custom.

SEC. 21. For those cases in which the production of perfumeries, etc., to be exported shall be performed in rooms securely closed in regard to customs, section 10, paragraph 2, of the execution regulations designated in section 20 shall find application.

APPENDIX 1.

Postal exit book relating to the exportation of alcohol containing perfumeries, head, tooth, and mouth washes for which drawback of spirits tax is claimed of ———, in ———, for the —— quarter of the ——— year, 18—.

INSTRUCTION FOR USE.

1. The consignor must fill out the columns 1 to 13 before the single sendings are removed from those rooms in which they have been made ready for shipping.

2. The entries into the columns 8, 10, and 11 must correspond with the relative statements made in the operation (notification) declaration. (Sec. 3, par. 1, under *b* and *c* of the drawback regulations.) If the contents of the inclosings are stated according to weight, then the alcoholic strength may be declared by weight per centums only; if the statement of the contents is made by liters, then the alcoholic strength must be declared by volume per centums.

3. Column 14 must be filled out under addition of the date by him who has delivered the sending at the post-office. The entry must be made on the very day on which the delivery to the post-office has been effected.

4. After the close of the quarter below the last entry the following declaration must be given by the consignor:

I hereby certify the correctness of the above-made statements, as also that for the production of the above (designated) recorded manufactures for which herewith the drawback of the spirits tax is claimed, only spirits have been used on which tax has been paid or which had been dispensed exempt from duty before the 1st of January, 1896.

———, the ———, 18—.

(Signature.)

5. Column 15 must be filled out by the revenue office, the statements of the consignor in columns 10 and 11 being

made the basis; a rounding off of the liter quantities to be entered shall not take place.

In the case of the notification having been made by weight and weight per centums the liter quantities to be entered of pure alcohol shall be determined by means of Table 2 of the instruction for ascertaining the alcoholic content of spirits. Thereupon, provided in column 11 other fractions than 0.5 kilogram have been reported, the calculation shall be made in such manner that the relative fractions are multiplied by 10, the resulting kilograms are rounded off in accordance with the designated instruction, and for the weight thus found in accordance with Table 2 the relative liter quantities of pure alcohol are determined. The latter thereupon must be divided by 10 and thereafter the entries into column 16 be effected.

In the case of the notification having been made by volume per centums the liter quantities to be entered will result by multiplying the degrees of strength reported with the liter quantity declared in column 11.

Column 16 must be counted up. The final sum shall be rounded off.

Appendix 2.

Notification for exportation of alcohol-containing perfumeries, head, tooth, and mouth washes for which the drawback of the spirits tax is claimed.

The notification has been submitted on the ——— and has been entered under No. —— of the notification register.

Hereto a transition certificate No. —— upon the ——— office at ——— has been imported.

———, the ——— ———, 18—.

Royal ——— revenue office.

(Signature.)

The undersigned, ———, hereby reports to the royal ——— office in ——— the alcohol containing ——— more accurately designated on the following page, for dispatching for the purpose of exportation over the ——— office in ——— to ———, and asks the allowance to him after exportation has been accomplished of the drawback of the spirits tax in accordance with the provisions herein made on the basis of the prescribed exportation certificates. At the same time he herewith gives the assurance that for the production of the manufactures for which drawback is claimed, only such spirits have been used on which tax has been paid or which have been dispensed exempt from duty before the 1st day of January, 1896.

———, the ——— ———, 18—.

(Signature of the consignor.)

Running number of the entry.	Name of consignee.	Residence of consignee.	Of the packages.			Of the internal inclosures.		Of the single perfumeries, etc.		Total quantity of the single perfumeries, etc., of equal alcoholic strength contained in internal inclosures of the same kind or of the same capacity (kilograms or liters).	Designation of the standing-vessel from which the single perfumeries have been taken.	The proof (reference) of the sending has been entered in the invoice book on page.	Recording of the name of him who has effected the delivery of the packages at the post-office.	Inspection remarks, etc., by the revenue officials.	Quantity of pure alcohol (liters).
			Mark and number.	Number and kind of the packing.	Gross weight (kilograms).	Number, kind, and designation according to the declaration of the management.	Contents (eventually of the dozen or of the cartoon) in kilograms or liters.	Denomination and designation according to the declaration of the management.	True alcoholic strength in weight per centums or volume per centums.						
1	2	3	4	5	6	7	8	9	10	11	12	13	14	15	16

EXIT CERTIFICATES.

The escort beyond the boundary is certified.
——, the —— ——, 18—.

(Signatures.)

It is hereby certified that the ——, designated on the preceding page, which under No. —— of the exit register are referenced, have been exported beyond the boundary.
——, the —— ——, 18—.
—— office.

(Signature.)

or:

The ——, designated on the preceding page, have been dispatched this day at —— o'clock — m., from here under package seal, and must be presented within —— days to the —— office at —— for the control of the exit.
——, the —— ——, 18—.
—— office.

(Signature.)

It is hereby certified that the ——, designated on the foregoing page, which are referenced under No. —— of the exit register, have crossed the boundary after removal of the seal found inviolated.
——, the —— ——, 18—.
—— office.

(Signature.)

or:

The —— designated on the preceding page have been laded in the freight car No. —— of the —— railroad that to-day at —— o'clock — m., locked with —— locks (series ——), has been delivered to the railroad administration for being produced within —— at the —— office at ——.
——, the —— ——, 18—.
—— office.

(Signature.)

The designated freight car has arrived here on the —— at — o'clock — m., and has immediately crossed the boundary after removal of the inviolated seal. The export of the —— mentioned has consequently occurred and has been recorded in the exit register No. —.
——, the —— ——, 18—.
—— office.

(Signature.)

Notification of the consignor.

Running number.	Of the packages.			Of the interior inclosings.		Of the single perfumeries, etc.		Total quantity of the single perfumeries, etc., of equal alcoholic strength, contained in internal inclosings of the same kind or of the same size (kilograms or liters).	Designations of standing vessels from which the single perfumes have been taken
	Mark and number.	Number and kind of the packing.	Gross weight (kilograms).	Number, kind, and designation according to the declaration of the business.	Contents (eventually of the dozen or of the cartoon) in kilograms or liters.	Denomination and designation according to the declaration of the business.	True alcoholic strength in weight per centums or volume per centums.		
1	2	3	4	5	6[1]	7	8[1]	9[1]	10

The correctness of the above statements is assured.
———, the —— ———, 18—.

(Signature of the notice giver.)

[1] To columns 6, 8, and 9: The entries must correspond with the relative statements of the declara operation made by the management. (Sec. 3, par. 1, under *b* and *c* of the drawback regulations.) the contents of the inclosings is stated according to weight, then the alcoholic strength may declared only in weight per centums; if the statement of the contents is made in liters, then alcoholic strength must be declared in volume per centums.

Finding of the inspection.													
	Of the packages.					Of the single perfumeries, etc.							
Running number.	Mark and number.	Number and kind of the packing.	Gross weight (kilograms).	Of the interior inclosings, number, kind, and designation, according to the declaration of the business.	Contents of the single inclosings, respectively of the dozen or of the cartoon, in kilograms or liters.	Denomination and designation according to the declaration of the business.	Apparent strength in weight per centums.	Temperature according to Celsius.	True strength in weight per centums.	Total quantity of the single perfumeries, etc., of equal alcoholic strength, contained in internal inclosings of the same kind or of the same size (kilograms or liters).	The total liter quantity of the perfumeries, etc.—column 21—of the temperature stated in column 19 and of the true strength stated in column 20 corresponds with a weight quantity of kilograms.	Quantity of pure alcohol (liters).	Remarks especially relating to the applied official closure.
11	12	13	14	15	16	17	18	19	20	21[1]	22[1]	23[1]	24

[1] To columns 21, 22, and 23: The weight or liter quantities to be entered must not be rounded off; column 22 must be filled out in those cases only in which the ascertaining of the contents has taken place by liters. If at the ascertaining of the weight, fractions result other than 0.5 kilogram, then the same must be multiplied by 10 for the purpose of the calculation of the liter quantity of pure alcohol, the resulting kilograms must be rounded off in accordance with the instruction for ascertaining the alcoholic content, and the corresponding liter quantities of pure alcohol must be determined for the weight thus found. Should an official inspection be dispensed with, then the filling out of column 23 shall be made on the basis of the statements made by the consignor in columns 8 and 9. Hereby, in the case of notification by weight and weight per centums, the liter quantities of pure alcohol to be entered shall be determined by means of Table 2 of the above-designated instructions respectively, in accordance with the preceding paragraph 2, in so far as in column 9 fractions have been reported other than 0.5 kilogram. In the case of the notification in volume per centums, the liter quantities to be entered will result by multiplying the degrees of strength reported with the liter quantity declared in column 9. Column 23 must be counted up. The final sum must be rounded off.

CENTRAL SHEET OF THE GERMAN EMPIRE, PUBLISHED AT BERLIN, DECEMBER 27, 1895.

1. CUSTOMS AND REVENUES.

The Federal Council in its session of the 19th of last month, in order to remove doubts that have appeared with reference to the application of section 20 *b*, the executive provisions to the spirits tax law of June 16, of this year, approved on the 27th of June, of this year (Central Sheet, p. 230), has taken a resolution to the purport that at the dispensation of spirits exempt from duty for industrial, etc., purposes, in those cases in which a methylation by vinegar takes place, a compensation of the distilling tax with 0.03 mark for each liter of pure alcohol must be allowed, even when the spirits have not been subjected to the mash-tub or material tax.

THE CHANCELLOR OF THE EMPIRE.
Represented by: COUNT OF POSADOWSKY.
BERLIN, *December 20, 1895.*

CENTRAL SHEET OF THE GERMAN EMPIRE, PUBLISHED AT BERLIN, JUNE 28, 1895.

4. CUSTOMS AND REVENUES.

The Federal Council in its session of to-day has resolved to approve the subsequently following regulations for the execution of the law of the 16th day of this month, relating to the change of the spirits tax law of June 24, 1887, with the provision that they shall become valid with the 1st day of July of this year.

THE CHANCELLOR OF THE EMPIRE.
Represented by: COUNT OF POSADOWSKY.
BERLIN, *June 27, 1895.*

Provisions for the execution of the law of June 16, 1895, relating to the change of the spirits tax law of June 24, 1887.

I. TO SECTIONS 12, 41 *v* AND 43 *c*.

A. General provisions.

Appendix 1.

SEC. 1. The chief office shall monthly, or, in the case [illegible] any need, semimonthly, put up a liquidation according [illegible] Appendix 1 and shall file the same, together with the paper [illegible] of discharge pertaining thereto, with the directive boar[illegible] with relation to drawback of tax, compensations to b[illegible] allowed in accordance with the provisions under B to D f[illegible] the exportation of spirits, as also of manufactures for t[illegible] preparation of which spirits have been used.

SEC. 2. The directing board shall fix the amounts [illegible] drawback on the basis of the submitted liquidation and [illegible] appendixes, and shall issue a certificate for drawback [illegible] spirits tax (a spirits tax compensation certificate) for each

paper of discharge, and that (*a*) if it concerns the allowance of drawback of the spirits tax in accordance with sections 10 to 15, according to Appendix 2; (*b*) if an allowance of drawback of the spirits tax in accordance with sections 16 to 19 comes into the question, according to Appendix 3.

Appendix 2.

Appendix 3.

SEC. 3. A register, according to Appendix 4, relating to the issue and discharge of certificates of drawback of the spirits tax for each fiscal year must be kept by the directive board. The running number of this register shall be noted upon the respective certificate. Besides this, that number and the date of issuing of the drawback certificate under affixation of the official stamp of the directive board upon the title page of the relative discharge paper must be stated in red ink (script).

Appendix 4.

The fixation of the amount of the drawback certificates and the issue of the certificates shall be in the charge of two officials having a reciprocal surveillance the one over the other, who at the same time shall be accountable for the correct filling out of columns 1 to 11 of the issue register. The columns 8 to 11 of the register shall be counted up monthly and the total sums shall be stated every quarter for the expired part of the fiscal year. The columns 12 to 14 must not be filled out but by an official who has not cooperated in the issuance of the drawback certificates.

Before the drawback certificates shall receive the signature of the president of the directive board or the imprint of his sign manual, the facsimile of his autograph, they must be signed upon the front page, at the right hand below, with the remark: "Issued" by one of the officials of the directive board taking part in the issuance under statement of his official capacity. This official hereby will take upon himself the responsibility for the correctness of the certificates issued. Thereupon the drawback certificates issued and the papers of discharge shall be remitted to the chief office in order to forward the drawback certificates to those entitled to receive them, and to deliver the papers of discharge to the levy officers.

SEC. 4. The amount for which the certificate of drawback of the spirits tax reads, from the very moment of delivery of the drawback certificate may, by any holder of the certificate, be brought into spirit tax of any kind not paid. at any revenue office of a German federal state, or may be drawn in cash at an office of the same federal state to be designated in the drawback certificate, from the 25th day of the sixth month after the month of the exportation of the spirits or of the manufacture capable of drawback. Also drawback certificates not yet matured may be brought into account for unpaid spirits tax which will become due either contemporaneously with the certificates or later on, for so long as this bringing into account will not be declared temporarily excluded by the chancellor of the Empire. If the day of maturity of the drawback be a Sunday or holiday, then the cash payment may be rendered on the preceding workday. The validity of the drawback certificate will expire with the expiration of one year, reck-

oned from the beginning of the month following upon the issue.

SEC. 5. Each drawback certificate will be either taken into account or redeemed by cash payment at the full amount therein named. The taking into account of a part of this amount under cash payment of the balance is inadmissible.

According as the amount of the drawback is either brought into account or collected in cash, the holder must fill out and sign the previously printed first or second receipt upon the rear page of the drawback certificate. These receipts will serve as treasury acquits.

Should drawback certificates be given for account of the tax debt of several payors, then this, along with the certificate of crediting (of taking into account), has to be made separately conspicuous by the designation of the relative taxpayers and of the amounts to be taken into account for each one of them, as also in the booking memorandum.

SEC. 6. He that will intend to bring into account or to collect in cash more than three drawback certificates at the same time will have to submit those certificates by means of a schedule, to be framed according to Appendix 5. In this case the correctness of the schedule must be examined on the basis of the vouchers and be certified and the acknowledgment of the actual taking into account, respectively, the acquit relating to the cash payment rendered as also the booking memorandum of the treasury officials, must be exhibited upon the schedule instead of upon the several drawback certificates (p. 4 of Appendix 5).

Appendix 5.

Immediately after the taking into account or after the cash payment the drawback certificates belonging to the schedule must be crosswise stricken through (canceled) with black ink, upon the front page, by the receiving office.

SEC. 7. After the expiration of each month of accounting the chief officers must file with the directive board in charge references according to Appendix 6 relating to the drawback certificates of spirits tax being taken into account or redeemed by cash payment during said term, either by themselves or by the levy offices of their district. If the certificates to be referenced have been issued by different directive boards, then for each of these boards a special reference must be framed. The reference concerning the certificates issued by the directive board in charge must be designated by the letter A. The other references will receive the letters B, C, etc. In each reference the certificates must be arranged according to fiscal years and to the issue numbers, and the amounts be counted up. The relative final sums will be put together in the reference A, under designation of the individual directive district, and there counted up. The conformity of the reference with the cashbooks of the chief office and with the summary of the revenue of the Empire must be certified to by the official charged with the supervision of the treasury.

Appendix 6.

At the directive board the correct counting up of the references must be examined and verification be taken thereof that the final sum of the reference A tallies (is

congruous) with the summary of the taxes of the Empire of the relative chief office. After the references for the fiscal month from all the chief offices have been received and examined, the references B, C, etc., shall be arranged according to the directive boards by which the drawback certificates have been issued, and shall be sent to them for the purpose of canceling the discharged drawback certificates in the issue registers. At the same time the drawback certificates scheduled in reference A shall be canceled in the personal issue register of the directive board.

SEC. 8. The amounts appropriated in the drawback certificates of the spirits tax, for the mash-tub or material tax, for the consumption duty and the distilling tax, must, as well in the monthly as in the quarterly summaries of the tax of the Empire, be deducted from the supposed receipts in mash-tub or material tax, respectively in consumption duty and in distilling tax.

SEC. 9. The provisions previously made in sections 2 to 8 shall find application also when in the cases of dispensation of spirits exempt from duty for industrial, etc., purposes or of the discounting exempt from duty of deficiencies in the quantity of spirits (sections 20 to 24) a drawback of the spirits tax must be allowed.

B. Export of spirits.

SEC. 10. At the exportation of domestic spirits from the domain of the spirits-tax community, (*a*) in all cases a drawback of the spirits tax of 0.06 mark, and along with it, (*b*) in those cases in which the spirits have been subjected to the mash-tub or material tax a drawback of the mash-tub or material tax of 0.1601 mark shall be allowed for each liter of pure alcohol.

The supreme financial boards of the countries shall be authorized to grant to tradesmen who in localities securely closed with regard to the custom, under constant official surveillance, manufacture wares for exportation and thereby make use of spirits, upon the condition of the export of all the wares, the drawbacks designated in paragraph 1, *a* and *b*, when the spirits are received into the localities of the institution securely closed with regard to the customs.

SEC. 11. The export drawback shall be allowed then only when the quantity of spirits exported at one time contains at least 50 liters of pure alcohol.

C. Export of manufactures containing spirits.

Appendix 7.

SEC. 12. As to the export of potable spirits of all kinds, of fruit juices, punch essences, and of alcohol-containing essences destined for use in the manufacture of potable spirits, as also of the tinctures and fluid extracts named in Appendix 7 (*a*), if the spirits used for their preparation have not yet entered free commerce, a drawback of the spirits tax in accordance with section 10, (*b*) if the spirits used for their production are found in the free commerce, a drawback of the mash-tub or material tax with 0.1601 mark of the consumption duty, with 0.70 mark of the distilling tax, with 0.06 mark for each liter of pure alcohol contained in the exported articles shall be allowed, only however to such manufacturers who enjoy the confidence of the revenue office and who have themselves produced

the articles to be exported. The directive board shall be authorized, in case of need, to grant the drawback also to such persons who have not themselves produced the article.

SEC. 13. No proof is necessary thereof that the spirits from which the articles falling under section 12 *b* have been produced have been subject to the mash-tub or material tax.

SEC. 14. The establishing of the liter quantity of pure alcohol in potable spirits, punch essences, and other alcohol-containing essences which have been compounded with sugar or other ingredients in such manner that a reliable examination by means of the thermoalcoholometer seems to be excluded, as also in fruit juices, tinctures, and fluid extracts, shall be performed in accordance with the discharge regulations approved by the resolutions of the Federal Council of November 26, 1891, section 572 of the minutes (Appendix 2 to the instruction for ascertaining the alcoholic content of spirits), and of July 20, 1893, section 490 of the minutes. The offices to which the authority for the discharge of the relative manufactures (articles) must be imparted shall be determined by the supreme financial board of the country.

SEC. 15. The export drawback shall be allowed only when the quantity of the manufacture presented to be investigated at once by means of the alcoholometer or to be examined by means of one single distillation amounts, in potable spirits to at least 20, in punch essences, alcohol-containing essences, tinctures, and fluid extracts destined to be used for the manufacture of potable spirits to at least 10, and in fruit juices to at least 100 liters.

D. Exportation of manufactures not containing spirits.

SEC. 16. On the exportation of manufactures not containing spirits according to the special regulations made in this regard: (*a*) If, for their manufacturing, spirits may be used exempt from duty, a drawback of the distilling tax with 0.06 mark; (*b*) if, for their manufacturing, spirits must exclusively be used on which duty has been paid, a drawback of the mash-tub or material tax with 0.1601 mark, of the consumption duty with 0.70 mark of the distilling tax with 0.06 mark shall be allowed for each liter of pure alcohol used for the exported manufactures.

Appendix 8 (reserved).

SEC. 17. No reference (proof) shall be necessary thereof that the spirits which have been used for the preparation of the manufactures falling under section 16 *b* have been subjected to the mash-tub or material tax.

SEC. 18. The export drawback must be allowed only when the quantity of the several manufactures exported by means of a notification amounts in the cases of section 16 *a* to at least 50 kilograms each, and in the cases of section 16 *b* to at least 10 kilograms. The directive boards shall be authorized to make exceptions therefrom in cases of need.

SEC. 19. The circumstance that the manufactures to be treated according to sections 16 to 18 are mixed with alcohol does not exclude the application of sections designated.

SEC. 20. At the dispensation of spirits exempt from duty for industrial, etc., purposes, (*a*) in those cases in which the spirits have been subjected to the mash-tub or material tax a drawback of the mash-tub or material tax with 0.1601 mark; (*b*) in those cases in which a methylation with vinegar takes place, besides this, a drawback of the distilling tax with 0.03 mark for each liter of pure alcohol shall be allowed. E. Dispensation of spirits exempt from duty for industrial, etc., purposes.

SEC. 21. The liquidation of the drawbacks shall be performed according to Appendix 9. With reference to the periods for which the liquidations must be put up and with reference to the minimum quantities the existing provisions shall suffice. (Secs. 7 and 17, par. 2, of the regulations, relating to the exemption from duty of spirits for industrial, etc., purposes; No. 14 of the provisions, approved by the resolution of the Federal Council of June 21, 1888, sec. 372 of the minutes, relating to the methylation of spirits; resolution of the Federal Council of October 27, 1892, sec. 631 of the minutes; sec. 11, pars. 5 to 7, of the prescriptions for the use exempt from duty of nonmethylated spirits for healing, etc., purposes, approved by the resolution of the Federal Council of November 18, 1892, sec. 708 of the minutes.) Appendix 9.

SEC. 22. When deficiencies of spirits in spirits-rectifying establishments or depots at the instance of the owner of the storehouse are discounted (credited) free from duty with that stock for which the mash-tub or material tax has been paid, then this duty shall be compensated with 0.1601 mark for each liter of pure alcohol coming to discount exempt from duty. F. Discounting (crediting) exempt from duty of deficiencies of spirits.

SEC. 23. The drawback must be allowed only when the deficiency discounted (credited) exemot from duty amounts to at least 50 liters of pure alcohol.

SEC. 24. The liquidation of the drawback must be presented separately under proper use of Appendix 1 and be evidenced (exhibited) by the transactions relating to the taking of stock and the propositions of the owner of the storehouse, which must be made before the conclusion of the taking of stock.

II. TO SECTION 41.

SEC. 25. The directive boards shall be authorized in special cases to grant that agricultural distilleries, which transiently do not satisfy the conditions of section 41 I, paragraph 2, relating to the use of distillers' mash and of the manure, shall nevertheless further on be treated as agricultural distillery establishments. In the same manner agricultural yeast distilleries, for regularly returning times of an increased demand for yeast, especially for the holiday seasons, may be permitted to dispense a part of the distillers' mash gained to other farmers during a definite period proportionate to the demand proved. A. No. I, par. 2.

SEC. 27. In the place of section 25, paragraph 2, last clause, and paragraph 3 of the regulations for storehouses B. No. V.

for spirits, the following provisions shall appear as paragraphs 3 and 4:

If spirits subject to different tax rates are on hand in the storehouse, then the discounting (crediting) exempt from duty of the spirits must be done according to the selection of the owner of the storehouse, with one or several of the items written down in the account.

If spirits for which the mash-tub or material tax has been paid are credited (discounted) exempt from duty in the account, then, for the quantity of liters of pure alcohol discounted (credited), the legal drawback of the mash-tub or material tax must be allowed.

SEC. 28. Section 26, paragraph 5, last clause of the regulations for storehouses for spirits, is amended and reenacted so as to read as follows:

The deducting (crediting) exempt from duty of a less amount in quantity shall be done according to the provisions made in section 25, paragraphs 3 and 4.

SEC. 29. The second last paragraph in Appendix 9 to the rules for the rectifying of spirits is amended and reenacted so as to read as follows:

The deficiency of 117,084 liters of pure alcohol at the instance of the owner of the establishment must be credited exempt from duty, with 51,032 liters, with the spirits encumbered by 0.70 mark consumption tax and 0.20 mark additional tax, with 66,052 liters with the spirits encumbered by 0.70 mark consumption tax and mark additional tax, since there is nothing to show that the loss of alcohol has not been caused solely by shrinkage and by natural influences and especially no reason exists for the suspicion that a part of the spirits has clandestinely been withdrawn.

III. TO SECTION 43 *a*.

A. Booking of the distilling tax.

Appendix 10.

SEC. 30. The levying office shall keep a distilling tax register of the proceeds of the distilling tax, according to Appendix 10, in quarterly sections of the time of the year of operation under observance of the instruction for use given in the appendix.

SEC. 31. As association distilleries that are subject to the reduced distilling tax for the extent of their previous operation (management), those agricultural distilleries must be treated which on the 1st day of April, 1895, have been operated upon common account by at least three partners, each of whom is independently running a farm and is regularly procuring mash from the distillery.

As proportionate to the extent of the operation for the single distillery interested, that maximum quantity of alcohol shall be assumed which it has produced in the time from the 1st of October, 1887, till to the 30th of September, 1894, in one year of operation. This quantity of alcohol must be retained in the distilling tax register, for so long as the production of the distillery does not exceed the same, the distilling tax shall be levied (collected) merely with three-fourths of the amounts calculated according to the full distilling tax rates. (Comp. No. 8 of the instruction given for the distilling tax register.)

SEC. 32. In the distilleries of molasses, beets, and beet juice having a share in the contingent, that quantity of alcohol which is not subject to the distilling tax raised by 15 marks for each hectoliter of pure alcohol shall amount to four-fifths of the eventual contingent. C. Par. 3.

For the distilleries of the designated kind not sharing in the contingent that have been in operation within the three years from the 1st day of June, 1892, till the 31st day of May, 1895, the quantity of alcohol not subject to the distilling tax, increased by 15 marks, must be established (fixed) as follows:

For each individual distillery of that kind the total quantity of the tub space on hand on the 1st day of April, 1895, must be ascertained by liters, and examination must be made whether the distillery, according to the size (capacity) of the distilling utensils then being on hand, has been able daily to distill the fourth part of the total tub space; should that be a fact, then it must be established how much of the tub space it has been possible to distill daily by means of the distilling utensils designated. As proportionate to the extent of the establishment (plant) in the former case, the daily distilling of the fourth part of the total tub space ascertained must be considered; in the latter case the daily distilling of a smaller tub space to be measured according to the productive capacity of the distilling utensils. The result of these ascertainments must be communicated to the treasury office of the Empire; this shall fix (establish) for each distillery, according to the daily productive capacity ascertained for it, how many liters of pure alcohol shall be its share (contingent) in the total quantity of 20,000 hectoliters of pure alcohol destined for allotment (distribution).

The quantities of alcohol fixed according to paragraphs 1 and 2 must be retained in the distilling tax register. (Comp. No. 9 of the instruction given for the distilling tax register.)

IV. TO SECTION 43 *b*.

SEC. 33. The amount of the distilling tax to be paid, calculated in the distilling tax register, must be communicated in writing to the owner of the distillery by the levy office and be paid within three days after communication has been made, under penalty of (forced) collection by execution.

V. TO SECTION 50.

SEC. 34. The measuring of the distilling tax to be paid by the individual distilleries in the time from the 1st day of July until the end of September, 1895, shall be made on the basis of the entire alcohol production since the beginning of the operation year 1894–95. For this purpose for each distillery coming under consideration the quantity of alcohol which it has produced before the 1st of July, 1895, must be officially ascertained and recorded (carried over) in the distilling tax register for the fourth quarter of the operation year 1894–95. A. No. I.

B. No. II. SEC. 35. The directive board shall have the decision o the propositions coming in in accordance with section No. II.

C. No. III. SEC. 36. The assessment to the contingent for the op ation years 1896–97 and 1897–98 of the agricultural a material distilleries newly established (arisen) and in tuted in an operative capacity before the 1st day of Oc ber, 1895, shall be performed by the supreme financial bo of the country under reservation of the reassessment to transacted at the new contingentization next followi Hereby the regulations in section 2, paragraphs 3 to 6 the spirits tax law, particularly those of paragraph 3 un *d*, second paragraph, as also the clauses 8 to 11 of the re lations of the contingentization approved by resolutio the Federal Council of January 25, 1894, section 42 of minutes, shall find appropriate application.

VI. PUTTING INTO ACCOUNT OF THE DISTILLING TAX.

SEC. 37. For the establishing of the proceeds of the tilling tax, and for the delivering of the same to imperial treasury, the provisions made under date A 3, 1878, by the office of the chancellor of the Empire in c currence (concordance) with the committee of the Fede Council on accounts, relating to the delivery of the custo and consumption duties, shall be valid.

In the monthly and quarterly summaries of the recei of imperial revenues (Forms III to VIII) the proceed the distilling tax levied according to section 43 *a* of law must be evidenced on a separate line behind 5 *c*. the column of remarks it must be stated how much of drawbacks paid is rated upon the exportation of spi and spirits' manufactures, and upon the use of spirits the production of vinegar.

The custom directive boards, along with the summa of the receipts in customs and consumption duties to put up according to article 39 of the constitution of Empire, must quarterly send in provisory summaries the receipt in distilling tax, and up to the 1st of Novem after the expiration of each fiscal year conclusive (fin summaries, according to Appendix 11, to the committe the Federal Council on accounts.

Appendix 11.

The resolution of the Federal Council of December 1873, section 581 of the minutes, shall find applicat upon the examination and certification of these summa by the representatives of the empire for customs and re nues (taxes).

Forms for the summaries must be obtained from bureau of control of customs and revenues of the imper treasury office.

The compensation of 15 per centum for the costs of c lection and administration shall be allowed from the gros should be—receipts from distilling tax. It must be k back, when the proceeds are delivered to the imper treasury, for those states that collect the tax.

SWITZERLAND.

LAWS RELATING TO THE TAX ON DISTILLED SPIRITS.

CONSULATE OF THE UNITED STATES,
Bern, October 24, 1894.

SIR: In the absence of Mr. Brodhead on leave I have the honor to inclose herewith one copy of the Swiss Federal alcohol law and two copies of the resolution of the Swiss Federal Council concerning methylated alcohol, requested in your dispatch No. 68, of 12th instant, to this legation.

I have, etc.,

JOHN E. HINNEN,
United States Vice-Consul.

Hon. W. Q. GRESHAM,
Secretary of State.

DECREE OF THE FEDERAL COUNCIL CONCERNING METHYLATED ALCOHOL (JANUARY 31, 1893).

The Swiss Federal Council, pursuant to article 6 of the law relating to spirituous liquors of December 23, 1886, on the proposition of its department of finances and taxes, decrees:

ARTICLE 1. Alcohols intended for industrial or domestic uses are subject to the monopoly of the Confederation. They shall be delivered conformably to the regulations herewith given upon cash payment and in quantities of at least one-fourth of a cask (about 125 kilograms or 150 liters) from the excise warehouses for alcohol intended for this purpose.

The provisions of articles 13 and 14 are reserved.

ART. 2. It is forbidden to apply to any other use, especially for the preparation of beverages, alcohols intended for industrial or domestic purposes; for this purpose these alcohols are subjected to methylation.

The methylation is effected by adding to the alcohol substances the properties of which render the mixture unfit for use as a beverage.

The methylation is absolute or relative.

The absolute methylation shall interfere as little as possible with the employment of the methylated alcohol as a combustible, etc., for household purposes.

In relative methylation the choice of the methylating substance may vary with the scientific or technical uses, or with the special industrial product for which the methylated alcohol is intended.

The choice of methylating substances is determined by the federal department of finance, which may require, as an additional guaranty against unlawful employment, that the alcohol intended for relative methylation be diluted with water.

ART. 3. Alcohol absolutely methylated is delivered by the excise of alcohols, on simple order, under the form of three-six methylated at 95° Tralles. The selling price is fixed till further order, beginning from the day of the publication of the present decree in the federal record, at 55 francs per 100 kilograms, net weight, of methylated alcohol, casks not included.

ART. 4. The employment of alcohol absolutely methylated after its issue from the warehouse of the excise is not at present subject to any direct control on the part of the excise. So far as regards the superintendence in the commerce and the trade of this alcohol, the provisions of article 9 of the law on spirituous liquors are applicable.

ART. 5. Whoever desires to procure alcohol relatively methylated, for the purpose of scientific work or for industrial purposes must for this purpose demand in writing of the excise of alcohols an authorization of the federal department of finance, indicating the use for which this alcohol is intended.

This authorization will be granted for any use which may permit a mode of methylation guaranteeing the application of the legal provision; the authorizations given are valid for an indefinite time.

The present holders of an authorization are not bound to procure a new one unless they find themselves in one of the cases provided in article 6, last paragraph, and in article 7, below. For the rest they are subject to the provisions of the present decree if there are no other.

ART. 6. The persons authorized to employ methylated alcohols are bound (*a*) to keep an account conformable to the regulations of the excise of alcohols as regards the buying and the employment of alcohols relatively methylated, as well as to the issue of the products manufactured by means of this alcohol; (*b*) to address to the excise of alcohols, at the end of each quarter, a certified extract from this account, an extract showing the movement of goods during the quarter that has passed; (*c*) to allow at any time the deputies of the excise of alcohols to take cognizance of the entire extent of their business and of their records, as well as to proceed to take an inventory of the existing stock and to take samples thereof, and they shall also furnish to these deputies the assistance which they may require in order to exercise their control; (*d*) to furnish a reason for any abnormal deficit, and in the case of grave disturbances in their work, or of other events occasioning exceptional waste of methylated alcohol or of manufactured product, to notify immediately the excise of alcohol.

Buyers of alcohol relatively methylated are forbidden to resell this alcohol; they are also forbidden to sell the manufactured products derived therefrom, when these products merely represent an insignificant modification of methylated alcohol.

ART. 7. The manufacturers who, alongside of the industry in which they use alcohol relatively methylated, carry on another industry requiring the employment of nonmethylated alcohol or absolutely methylated alcohol shall keep their different manufactures separated from each other. In case of demand, duly supported on their part by reasons, the department of finance may grant an exception to this rule.

ART. 8. Beginning from the day after the publication of the present decree in the federal record, and until a new decision, the selling price of alcohol intended for relative methylation is fixed as follows:

(*a*) For raw alcohol, at 45 francs per hectoliter, at 100 degrees (10,000 liter degrees).

(*b*) For the three-six, at 95 degrees, at 53 francs per 100 kilograms of *et weight.*

The prices apply to goods not barreled, the methylating substances not included.

If the buyer demands a methylation of an alcohol of a quality superior to three-six fine, the price thereof will be fixed upon agreement with him by the excise of alcohol.

ART. 9. Persons authorized to use alcohols relatively methylated must procure themselves the methylating substances and send them in time, at their expense, to the respective warehouse of the excise of alcohol. In the warehouse these substances are analyzed in regard to their composition, and if this composition corresponds with the required condition they are mixed in the proportion prescribed at three-six to be methylated.

The excise of alcohol furnish, on demand, the methylating substances on the account of buyers of alcohol relatively methylated.

ART. 10. Orders for alcohol absolutely or relatively methylated shall be addressed, franked, to the federal excise of alcohols at Berne; the excise will not be responsible as regards the regular execution of orders which, contrary to this ordinance, are transmitted directly to its warehouses.

The execution of orders is regulated by articles 11 to 18, so far as they are applicable under the decree of the Federal Council of December 13, 1890, concerning the sales by the excise of alcohols of the spirituous liquors submitted to the monopoly.

ART. 11. Those who buy at one time not less than 5,000 kilograms of alcohol absolutely or relatively methylated, and which is to be sent to the same address, have the right to the following rebate on the purchasing prices fixed in article 8:

	Per cent.
(a) On a tank car	2
(b) On a car of 10,000 kilograms, in whole casks	1½
(c) On a car of 10,000 kilograms, in smaller casks	1
(d) On a car of 5,000 kilograms, in whole casks	1
(e) On a car of 5,000 kilograms, in smaller casks	½

The excise of alcohols is authorized to deliver the methylated alcohols in its own tank cars, so far as it can, at a cost of 20 francs per trip for transportation.

ART. 12. When the purchaser of methylated alcohol desires to receive it in casks furnished by the excise. the excise will sell the casks to him at the following prices:

NEW CASKS HAVING SERVED ONLY ONCE.

	Francs.
(a) Whole casks of a capacity of about 640 liters	36
(b) Half casks of a capacity of about 320 liters	23
(c) Quarter casks of a capacity of about 150 liters	15
(d) Petroleum barrels of a capacity of about 180 liters	5

The excise of alcohols will not lend casks.

ART. 13. Instead of addressing the excise, the persons entitled to relative methylation may, until a new decision, procure directly from abroad or from the federal customs warehouses the methylated alcohol necessary for their industry, on payment of the federal customs duty of 7 francs per hundredweight raw; they must, however, be provided for this purpose with a special authorization from the federal department of finance.

ART. 14. The purchasers of alcohol relatively methylated to whom the special authorization provided in article 13 has been granted, or their transportation agents, are bound to send, for every quantity of alcohol

imported into Switzerland or issuing from the federal customs warehouses for the purpose of relative methylation, a written declaration to the customs officials designated for this purpose. This declaration shall mention the name of the person or firm who is to receive the goods, the gross and the net weight of the goods, the alcoholic percentage, the use for which it is intended, the methylating substance, and the proportion in which the latter is to be mixed.

The importation by private persons of alcohols intended for relative methylation may only take place through the frontier station designated by the director-general of customs.

The methylation of shipments of this kind shall be effected, until a new decision, by the customs authorities by means of methylating substances which the buyer shall furnish at his expense to the frontier office, or to the customs warehouse where they shall be officially analyzed.

This buyer or his transportation agent is bound to pay, by way of indemnity, a fee of 50 centimes per 100 kilograms of alcohol to the customs officer who has effected the methylation; this indemnity, however, shall not exceed 10 francs per full car.

Each month the director-general of customs shall send to the excise of alcohols a detailed statement of the declarations of importations with indication of methylations effected.

ART. 15. With the assent of the department of finance the operation of relative methylation and the previous analysis of the methylating substance furnished for this purpose may take place in the establishment of the persons who have received authorization of relative methylation, no matter whether the alcohol has been bought of the excise itself, or comes from abroad, or comes from a customs warehouse. In this case the buyer is bound to furnish the assistance and utensils required by the officers of the excise or of the customs charged with the operations, and to refund to the latter the regulation traveling and living expenses.

ART. 16. Any contravention of the present decree or of the regulation which fixed the application thereof, is subject to the penalties provided either in the federal law on spirituous liquors, or in the federal law on customs, or in both laws together.

ART. 17. The present decree shall go into effect immediately. It abrogates all decisions to the contrary previously passed.

The department of finances and customs is charged with its execution.

In the name of the Swiss Federal Council.

SCHENK,
The President of the Confederation.
RINGIER,
The Chancellor of the Confederation.

BERNE, *January 31, 1893.*

QUALITIES REQUIRED IN THE PYRIDINE BASES.

The mixture of bases is to be colorless or faintly yellow. Its content of water is not to exceed 1 per cent. On the distillation of 100 units of volume at least 90 volumes shall pass over up to a temperature of 140° C. The mixture shall admit of being mixed with water without notable turbidity in any proportion and shall be free from ammonia.

QUALITIES REQUIRED IN SOLVENT NAPHTHA.

This liquid shall be only faintly yellow, and in the main shall boil between 120 and 150 degress, 95 per cent of volume passing over.

Specific gravity equal to 0.874 to 0.878 at 15° C. On shaking with concentrated sulphuric acid the latter should become yellowish brown to red yellow, while the naphtha itself becomes slightly more yellow than before.

Concentrated potassium and sodium lye has no effect; fuming nitric acid nitrogenizes completely without residue.

QUALITIES REQUIRED IN WOOD SPIRITS.

(1) *Color.*—The color of the wood spirits should not be darker than that of a solution of 2 centimeters of one-tenth normal solution of iodine in a liter of distilled water.

(2) *Boiling temperature.*—One hundred cubic centimeters of wood spirits are introduced into a metal piston provided with distilling tube and bulb and connected laterally with a Liebig cooler. Through the upper opening an officially certified thermometer with centigrade scale is introduced, the mercury bulb of which extends below the connecting tube. The piston is moderately heated, so that the distillate passing over runs out of the cooler in drops. The distillate is caught in a glass cylinder, and when the thermometer shows 75° at the normal state of the barometer at least 90 cubic centimeters should have passed over. If the state of the barometer is not normal, then for every 30 millimeters 1 degree is to be allowed; but for example, 90 cubic centimeters ought to have passed over at 770 millimeters and 75.3°, and 750 millimeters at 74.7°.

(3) *Miscibility with water.*—Twenty cubic centimeters of wood spirits ought to give with 40 cubic centimeters of water a clear but faintly opalizing mixture.

(4) *Preparations with soda lye.*—On taking 20 cubic centimeters of wood spirits with 40 cubic centimeters of soda lye of 1.3 sp. gr., after half an hour at least 5 cubic centimeters of wood spirits ought to have separated.

(5) *Content of acetone.*—One cubic centimeter of a mixture of 10 cubic centimeters of wood spirits with 90 cubic centimeters of water is shaken in a narrow mixing cylinder with 10 cubic centimeters of double normal soda lye (80 grams of soda hydroxide in 1 liter). Thereupon 5 cubic centimeters of double normal iodine solution (254 grams of iodine in 1 liter) are added, with constant shaking. The separating iodoform is taken up by means of 10 cubic centimeters of ether of a specific gravity of 0.722, with vigorous shaking; of the layer of ether which separates after short rest, 5 cubic centimeters are taken and by means of a pipette placed on a weighed watch crystal and slowly evaporated on it. Thereupon the watch crystal is placed for two hours over sulphuric acid and then weighed. The increase in weight should not be more 0.07 grams.

(6) *Capacity to take in bromine.*—One hundred cubic centimeters of a solution of potassium bromate and potassium bromide prepared according to directions given below are mixed with 20 cubic centimeters of sulphuric acid diluted in a manner also indicated below. To this mixture, which represents a bromine solution of 0.703 grams of bromine, wood spirits are added from a burette divided into tenths of cubic centimeters drop by drop under continuous shaking until the discoloration becomes permanent. For discoloration not more than 30 nor less than 20 cubic centimeters of wood spirits ought to suffice. The test as to the capacity to receive bromine must always be made in full daylight.

[PREPARATION OF THE INGREDIENTS OF THE BROMINE SOLUTION.]

(*a*) *Bromine salt.*—Two and four hundred and forty-seven thousandths grams of potassium bromate and 8.719 grams of potassium bromide, having been dried for at least two hours at 100° and cooled in the exsiccator and first tested for their purity, are weighed and dissolved with water. The solution is filled up to 1 liter.

(*b*) *Dilute sulphuric acid.*—One volume of concentrated sulphuric acid is mixed with three volumes of water. The mixture is allowed to cool.

Message of the Federal Council to the Federal Congress relating to the execution of articles 31 and 32 and transition provision 6 of the federal constitution. (Passing of a federal law relating to the manufacture and taxation of spirits of October 8, 1886.)

On October 25, 1885, by a majority of the voting citizens, as well as by a majority of the cantons, the following changes in the federal constitution of 1874 have been adoptod:[1]

ART. 31. Liberty of commerce and trade is guaranteed within the entire territory of the Confederation. There are reserved—

(*a*) The salt and powder regulations, the helvetic customs, the import duties on wine and other spirituous liquors, as well as other consumption taxes expressly recognized by the Confederation in accordance with article 32.

(*b*) The manufacture and the sale of distilled liquors in accordance with article 32.

(*c*) The inn keeping and the retail trade with spirituous beverages, in that sense, that the cantons by way of legislation may subject the carrying on of the innkeeping business of the retail trade with spirituous beverages to the restriction required by the public weal.

(*d*) Sanitary police regulations against epidemics and epizootics (murrains).

(*e*) Directions relating to commerce and trades, to the taxation of the carrying on of trades, and to the use of highways. These directions must not prejudice the principle itself of the liberty of commerce and trade.

ART. 32. The cantons are entitled to levy the import duties on wine and other spirituous beverages mentioned in article 31, lit. *a*. under the following restrictions:

(*a*) At the collection of the same the transit shall be molested in no manner and the commerce in general be hampered as little as possible and be charged with no other duties.

(*b*) If the goods imported for consumption be again exported from the canton, then the import duties paid thereon are to be refunded without any further molestation.

(*c*) The products of Swiss origin are to be taxed with lower duties than those from abroad.

(*d*) Import duties on wine or other spirituous beverages of Swiss origin are not allowed to be raised where such already exist, and not to be introduced in cantons which do not yet levy any.

(*e*) The laws and regulations of the cantons relating to the import duties are to be submitted before their execution to the federal author-

---

[1] The enactments added to the contents of the old constitution are printed in italic types, article 32, remaining the same but having connection with the changed provisions, is appended.

ity for approbation, in order that the nonobservance of the preceding principles may be prevented.

At the expiration of the year 1890 all import duties which at the present time are levied by the cantons, as also similar duties levied by single communities, shall be abrogated without any indemnification.

ART. 32. *The Confederation is authorized, by way of legislation, to issue directions relating to the manufacture and the sale of distilled liquors. At this legislation those products that either are to be exported or that have undergone a preparation excluding their use as a beverage shall not be subjected to any taxation. The distilling of wine, fruit and their wastes, of fell-wart, of juniper berries, and of similar materials does not, concerning manufacture and taxation, fall under the federal legislation.*

After the abrogation of the import duties on spirituous beverages, mentioned in article 32 of the federal constitution, the traffic in such beverages that are not distilled may not be subjected by the cantons to special taxes, nor to other restrictions than those that are necessary for the protection against beverages adulterated or noxious to the health. Yet hereby in regard to the carrying on of innkeeping and retail trade in quantities less than two liters, the rights belonging to the cantons, according to article 31, are reserved.

The net revenues obtained from the taxation of the sale of distilled liquors remain to those cantons in which they have been levied.

The net proceeds of the Confederation from the domestic manufacture and from the proportionate additional payment of customs on imported distilled liquors are distributed among all the cantons in proportion to their actual population evidenced by the latest census.

TRANSITION PROVISIONS TO THE FEDERAL CONSTITUTION.

ART. 6. *If a federal law in the sense of article 32 should be introduced before the end of the year 1890, then with its going into effect the import duties on spirituous beverages levied by the cantons and communities, according to article 32, will be abolished (abrogated).*

If in this case the shares calculated for the single cantons and communities in the sum to be distributed should not be sufficient to compensate the abolished duties on spirituous beverages according to the average yearly net proceeds in the years 1880 up to and including 1884, then the resulting shortage will be covered for the cantons and communities affected to the end of the year 1890 from that sum which would come to the other cantons in proportion to their population, and only the balance will be distributed to the latter according to their population. Besides this, it is to be effected by way of federal legislation that in those cantons or communities for which the going into effect of this enactment may cause a final loss, this loss may not accrue at once in its full extent, but merely gradually until the year 1895. The sums of indemnification hereto requisite are to be deducted in advance from the net proceeds designated in article 32, line 4.

This revision of the constitution had for its purpose to grant to the federation and to the cantons in the legislative sphere a series of new safeguards for combating increasing inebriety and especially for the restriction of the abusive enjoyment of spirits. For the execution of the regulations (measures) which in this combat against alcoholism has been especially assigned to the federation, we have the honor to submit to you for approbation the scheme of a law relating to the manufacture and taxation of spirits with the ensuing message.

We begin with more precisely defining the task, which, according to our view, must be set for the federal law to be passed. The same shall

effect a raising of the price of spirits for consumption, secure a better quality of this beverage, remove the inconveniencies which are connected with the present distilling business and sale of spirits, yield a financial result which is sufficient to do justice to the obligation assumed in article 32 of the federal constitution and in article 6 of its transition provisions for the disencumbrance of undistilled beverages.

Those postulates shall be complied with by sparing as much as possible the financial resources of the Confederation, by caring as much as possible for the agricultural and industrial interests connected with the distilling business, by forming an administration, simple as possible and by executing as strictly as possible the regulations.

The solution, finally, must be enabled to justify itself before considering the demands of the general national economy and social-political opportunity, for the observance of the obligations laid down in the commercial treaties.

Before entering upon a closer explanation of these demands, we think it proper to make some communications relating to the conditions of the Swiss distillery.

Since the distillery business, however, is subjected to government supervision merely in a few cantons, and even in them solely in a restricted measure, our statement, in relation to it can neither claim completeness nor absolute accuracy. Already, at the inquest of 1883, in the interrogatory sheets questions had been embodied for the number and production of those distilleries and manufactories of spirits of wine which produce over 150 liters of distilled liquors yearly. The answers, however, proved to be so manifestly incomplete that a compilation of the same was dispensed with. However, a circular interrogatory, commencing with the year 1885–86, submitted to the governments of the cantons relative to the number and the quantity of annual production of such distilleries, which in regular business operation manufacture from farinaceous materials more than 2 hectoliters of spirits per annum and deal in the product thus obtained, yielded the results reproduced in the juxtaposition found below:

Number of the distilleries subject to federal taxation and productions of the same during the distillery year 1885–86, in hectoliters of absolute alcohol.

Cantons.	Import duties on alcohol per liter or kilogram, in centimes.		Distilleries with an annual production of—																					
			Below 10 hectoliters.		10–25 hectoliters.		25–50 hectoliters.		50–100 hectoliters.		100–200 hectoliters.		200–300 hectoliters.		300–600 hectoliters.		1,000–2,000 hectoliters.		2,000–3,000 hectoliters		Over 4,000 hectoliters.		Total.	
	Foreign.	Swiss.	Number.	Production.	Number.	Production.	Number.	Production.	Number.	Production.	Number.	Production.	Number.	Production.	Number.	Production.	Number.	Production.	Number.	Production.	Number.	Production.	Number.	Production.
I. Cantons which levy import duties on distilled waters of foreign and Swiss provenience (origin).																								
Bern	4,300	3,900	284	1,542	250	4,054	47	1,550	5	299	2	357	....	.....	....	.....	1	1,564	1	2,309	2	13,164	592	24,839
Lucerne	3,330	2,800	60	316	35	595	16	522	8	527	4	483	1	280	....	.....	....	.....	....	.....	....	.....	124	2,723
Soleure	2,700	2,430	6	38	18	344	17	647	21	1,522	14	2,054	1	210	1	490	....	.....	....	.....	....	.....	78	5,305
Freyburg	2,380	1,930	29	133	21	353	19	720	7	476	9	1,309	1	280	3	1,225	....	.....	....	.....	....	.....	89	4,496
Basel (county)	2,000	2,000	6	24	7	110	2	87	1	53	1	105	....	.....	....	.....	....	.....	1	2,500	....	.....	18	2,879
Grisons	1,350	980	3	21	1	10	....	.....	....	.....	....	.....	....	.....	....	.....	....	.....	....	.....	....	.....	4	31
Aargau	1,000	500	22	745	11	188	8	256	3	210	4	490	1	210	....	.....	....	.....	....	.....	....	.....	49	2,099
Total	.....	.....	410	2,819	343	5,654	109	3,782	45	3,087	34	4,998	4	980	4	1,715	1	1,564	2	4,809	2	13,164	954	42,372
II. Cantons which levy import duties solely on foreign distilled waters.																								
Vaud	1,200	.....	....	.....	1	14	....	.....	....	.....	....	.....	....	.....	....	.....	....	.....	....	.....	....	.....	1	14
Ticino	570	.....	1	2	....	.....	....	.....	....	.....	....	.....	....	.....	....	.....	....	.....	....	.....	....	.....	1	2
Basel City	330	.....	2	15	1	14	....	.....	1	98	....	.....	....	.....	....	.....	....	.....	....	.....	1	7,000	5	7,127
Total	.....	.....	3	17	2	28	....	.....	1	98	....	.....	....	.....	....	.....	....	.....	....	.....	1	7,000	7	7,143
III. Cantons which levy no import duties on foreign distilled waters.																								
Thurgau	.....	.....	10	31	2	24	1	35	1	70	....	.....	....	.....	....	.....	....	.....	....	.....	....	.....	14	160
Zurich	.....	.....	4	14	....	.....	....	.....	1	56	....	.....	....	.....	....	.....	....	.....	....	.....	....	.....	....	70
St. Gall	.....	.....	2	11	....	.....	....	.....	1	77	....	.....	....	.....	....	.....	....	.....	....	.....	....	.....	....	88
Zug	.....	.....	1	8	....	.....	....	.....	....	.....	....	.....	....	.....	....	.....	....	.....	....	.....	....	.....	1	8
Neufchatel	.....	.....	1	6	....	.....	....	.....	....	.....	....	.....	....	.....	....	.....	....	.....	....	.....	....	.....	1	6
Total	.....	.....	18	70	2	24	1	35	3	203	....	.....	....	.....	....	.....	....	.....	....	.....	....	.....	24	322
Grand total	.....	.....	431	2,906	347	5,706	110	3,817	49	3,388	34	4,798	4	980	4	1,715	1	1,564	2	4,809	3	20,164	895	49,847
Average production per distillery	.....	.....	....	6.7	....	16.4	....	34.7	....	69.1	....	141.1	....	245	....	428.8	....	1,564	....	2,404.5	....	6,721.3	....	50.6

Distilleries the production of which is not reported: Bern 24, Lucerne 8, Thurgau 2, Zurich 2, Geneva 1; total, 37. Aggregate total, 1022.

[illegible] 1,022 distilleries in existence according to this table, are to [illegible] the numerous distilling establishments not subjected to the [illegible] legislation, which are engaged in the distillation of wine, fruit and their wastes, chiefly in wine and fruit growing sections, mostly with primitive contrivances, the trades belonging to the same category which work wild-growing berries, roots, etc.; and, finally, the not inconsiderable number of such distilleries of farinaceous materials which in their production and sale do not exceed the minimum yields (outputs) assumed in the circular interrogatory mentioned. In regard to all these distilleries we are not in the position to give reliable statements concerning either their number or their production.

As can be seen by the table the distillation business subject to federal taxation is concentrated essentially upon those cantons that have the highest customs duties.

Not taking into consideration the thirty-seven plants in regard to which the amount of production was not obtainable, of the remaining 985 distilleries, with a yearly production of 49,847 hectoliters of absolute alcohol, 954 with a production of 42,372 hectoliters are shared by those seven cantons that levy an import duty of 5 to 43 centimes per liter or kilogram of alcohol on distilled liquors of foreign and Swiss origin. Of the cantons levying an intercantonal duty on liquors solely, Uri, Unterwalden, Glarus, and Valias are not represented by any distilleries. The same is the case with the cantons not levying an intercantonal duty on liquor, viz, Schwytz, Schaffhausen, and Appenzell. The cantons not levying an intercantonal duty on liquors, viz, Thurgau, Zurich, St. Gall, Neufchatel, and Geneva, as also the canton Zug, which levies import duties solely on wine and beer, but not on distilled liquors, produce in 24 distilleries together merely 332 hectoliters of alcohol.

No production worth mentioning is found, but in the middle and northern parts of Switzerland, in the seven cantons of Bern, Lucerne, Soleure, Freyburg, Aargau, and the two Basels.

As far as the quantity of production in the individual places of business is concerned, the majority of the distilleries have to be named small-trade plants, or business concerns on a small scale, according to our statement. If we designate the producers of less than 100 hectoliters as small distillers, those with a production of 100 to 1,000 as medium distillers, and those producing more as great distillers, then we will accept the following distinction:

Concerns subject to federal taxation with an annual production—	Number.	Per cent.	Quantity of production.	Per cent.
			Hectoliters.	
Below 100 hectoliters	937	95	15,817	32
Of 100 to 1,000 hectoliters	42	4	7,493	15
Above 1,000 hectoliters	6	1	26,537	53
Total	985	100	49,847	100

These cantons that do not levy (charge) any import duties on distilled liquors have merely small concerns, as also the cantons levying a retail duty, viz, Grisons, Vaud, and Ticino. The medium concerns appear particularly in the cantons of Soleure and Freyburg. The great concerns are found in Bern and the two Basels. With the latter the principal manufacture consists in the working of foreign cereals. Potatoes of domestic and foreign growth (orign) are used solely when the prices

have a low range. As far as the other concerns are to be considered, potatoes either planted by the owners or bought at home form the chief material of the distilleries in the cantons of Bern, Lucerne, and Freyburg. Cereals are used only (more) accessorily. In Soleure, besides the domestic potatoes, also foreign grain is distilled in a degree already noticeable. Still more pronounced does this condition appear in the cantons of Aargau and Basel. In the eastern section of Switzerland, finally, the use of domestic and foreign cereals has gained a complete superiority over the distillation of potatoes. Besides the grain and potato distillation, a goodly number of beer breweries in almost all the sections of the country where beer is produced manufacture distilled liquor out of rest beer, smooth water, and other wastes of the brewing industry. Beets, as far as we know, are nowhere in Switzerland used for distillation of spirits. Also, the molasses distillation has been abandoned since the sugar manufactories make a more exhaustive use of this material by technical appliances.

In several alcohol manufactories and spirits distilleries compressed yeast is manufactured along with the production of distilled liquors.

The values of the chief raw materials vary greatly. For potatoes for distillation the quotations go from 3.80 francs up to 5.50 francs per hundredweight. Five francs may be considered as an average for a longer series of years. Maize at the present time stands at the price of 15½ francs to 20 francs in the small and medium concerns, while the great concerns can procure for themselves at the present time this material at 14½ francs. La Plata maize, a sort frequently used for distillation, is noted at this time, postpaid at stations, Genoa, at 11½ to 12 francs per hundredweight, gross weight.

With respect to the technical perfection, there are, firstly, to be distinguished concerns worked by steam and distilleries with a direct firing; further, with the steam concerns manufactories with continually working apparatuses, and such with alembic apparatuses. Of continually working apparatuses, seven have come to our knowledge—the six above-mentioned great concerns, with a production of over 1,000 hectoliters, and one distillery, situated in the canton of Zurich and at present out of operation. We are not informed concerning the number of the other steam distilleries, nor concerning that of the distilleries with simple or complicated apparatuses for direct firing.

The alcoholic strength of the accomplished product rarely exceeds 50° Tralles in the distilleries with direct firing. With the alembics worked by steam it moves between 65° and 80°. The crude spirits of the six alcohol manufactories with continually working apparatuses show a strength of 75° to 92°; in the majority of these manufactories it rises up considerably above 80°.

A regular rectification of the the low wine is carried on solely in the great concerns, and that in four of the manufactories standing in actual operation with and two without previous refining by means of charcoal filters; by them the spirits are brought up to a strength of 95° to 96½°.

More extended is the purification of the product of distillation by charcoal filtration alone. A goodly number of medium and smaller concerns make use of this process of purification in a more or less correct and regular manner. In many distilleries it is indeed performed merely in that way, that pieces of charcoal are deposited in the little felt sack which is placed in front of the passage—an operation which is useless for the purification of the product.

With not a small number of concerns neither a rectification nor a refinement takes place. With many the alcoholic impurities are masked

by distilling along with it fruit, juniper berries, etc. But the influence the different modes of treatment have upon the purity may be elucidated by the following statement. The products of our biggest alcohol manufactories placed at our disposal for experiments showed, when measured by the Traube capillarometer, the following content of fusel oil:

	Per cent.
Crude alcohol	1.32
Crude alcohol filtrated through charcoal	.20
Crude alcohol rectified	.06
Crude alcohol filtrated through charcoal and rectified	.00

Potato spirits from a smaller steam distillery of the canton of Bern, and not challenged by the sanitary control of the canton—the ready-made product of the distillery showing an alcoholic strength of 70°—contained, according to the same test, 0.75 per cent of fusel oil. Dr. Baer, member of the board of health, an acknowledged authority on the alcohol question, in a lecture delivered in 1885 at Dresden, asserts as a postulate that spirits which contain more than 0.3 per cent of alcoholic impurities should no longer be admitted for consumption.

In regard to the prices of alcohol and spirits the following may be adduced.

According to the price list of a wholesale firm at Basel, fine alcohol of 95° from the Swiss alcohol manufactories on July 22 of this year (in whole casks of about 600 liters), taken from Basel, was offered at 58½ to 59½ francs per hectoliter, barrel included. Hereto is added, at cost to the purchaser, the following import duties:

	Francs per hectoliter.
Bern	37
Lucerne	28
Soleure	24.50
Freyburg	20
Uri	15
Obwalden	11
Grison	10
Aargau	5

Into the cantons of Vaud and Valais, Swiss fine alcohol is delivered off Basel at 66½ to 67 francs per hectoliter. Our manufacturers have an almost exclusive monopoly over foreign competition in these two cantons which incumber the foreign product with an increased tax of 12 francs; consequently, there came from the extra cantonal Swiss manufactories 793 of the 998 hundredweight of alcohol which in 1885 had been imported into the canton of Valais, and 5,544 hundredweight of alcohol of the 8,868 hundredweight which in the same year have been imported into the canton of Vaud. The Bernese alcohol manufacturers sell their produce in the canton of Bern itself, postpaid, delivered at the railroad station, for 90 to 94 francs, exclusive of the barrel.

The prices of the common spirits of a strength of about 50°, manufactured in the small and medium concerns and sent directly from the distilleries, in the centers of the chief production, move within the following limits:

	Francs per hectoliter.
Bern	45 to 60
Lucerne	55 65
Soleure	50 60
Freyburg	50 60
Basel County	45 60
Aargau	60 75

These prices, being high compared with the concurring foreign sorts, are to be explained, according to our opinion, chiefly by the direction of taste of our consumers, frequently disfavoring foreign spirits; and the comparatively low prices in Bern may be explained by the strong internal competition in said canton. Compressed yeast is disposed of at 1 franc per kilogram.

As far as lees are concerned they are, in the big alcohol manufactories at Angenstein, Pruntrut, Hindelbank, Bern, Liestal, and Basel, put to use only in so far as they can be sold to neighboring husbandmen and be used for the feeding of cattle, for fattening or for milking, by the owners of the factories. The mode of feeding as a whole is not irrational. The factories in Angenstein and in Bern know of no other use of the lees than the sale—Angenstein at 40 and Bern at the average of 75 centimes per hectoliter. That which can not be sold is simply permitted to run away. The owners of the establishments in Hindelbank and Liestal for the greater part make use of the distillery refuses on their own big farming institutions. At the sale about 50 centimes are realized. The distilleries in Pruntrut and Basel, though being in possession of cultivated land of their own, yet have no agricultural concern proper, as we have found in Liestal and Hindelbank. They also keep some milch cattle. The greater part of the lees is sold at 50 to 70 centimes per hectoliter, according to the season, to the farmers of the surrounding country. The same must be said of the manure—price 3½ to 5 francs per cubic meter on the premises of the factory.

At most of the rural small and medium concerns the refuse of the distillery at those times when green fodder is wanting—between the months of October and May—is delivered over to their own cattle for fattening and for milking. This mode of putting to use is clearly expressed by the short periods of operation of the distilleries. We are indeed in want of the respective statements for the whole of Switzerland, but the following statements concerning the distilleries in the canton of Bern may be considered as typical in this direction. In the campaign of 1885–86 the Bernese distilleries and alcohol manufactories had the following duration of operation:

	Months.
15 distilleries	0 to 1
35 distilleries	1 to 2
56 distilleries	2 to 3
82 distilleries	3 to 4
95 distilleries	4 to 5
174 distilleries	5 to 6
63 distilleries	6 to 7
28 distilleries	7 to 8
15 distilleries	8 to 9
4 distilleries	9 to 10
5 distilleries	10 to 11
19 distilleries	11 to 12
25 distilleries	Unknown.
616	

We are sorry to say that the manner of using the lees in the medium and small concerns is not thoroughly a rational one. The irrationality consists either in the feeding away of quantities doled out in too large or too one-sided portions, or in the nonobservance of the correct temperature, or finally in the use of impure, sour, or rotten lees. Along with the strictly agricultural distilleries there exists a series of concerns, especially such as are of medium size, which forward their whole product of lees to farmers in the vicinity. The prices thereby yielded

are very varying in the different cantons. In Freyburg the sale prices were from 80 to 100 centimes; in Soleure from 75 to 100 centimes, and in Basel only 40 to 60 centimes per hectoliter.

Since the cost for establishing the plant, the prices for the raw materials, the conditions of operation, and the technical capacity of rendition show strong declinations of one distillery from the other, the production costs of the medium and small concerns show a very different height. However this may be, we believe that, based upon the statements received, we may designate as an average of the present conditions the following account over the operation of medium-sized steam distilleries in the cantons of Bern and Zurich, which account in its principal features is borrowed from real facts. According to that the production cost would amount in the canton of Zurich to 8,152.50 francs for 90 hectoliters of absolute alcohol, or 90.60 francs per hectoliter, and in the canton of Bern to 7,712.50 francs for 81 hectoliters. or 95.20 francs per hectoliter of absolute alcohol.

	Bern.	Zurich.
EXPENSES.		
1. Mash material.	*Francs.*	*Francs.*
150 distilling days, each with 6 quintals of potatoes, at 5 francs per quintal	4,500.00	.....
150 distilling days, each with 45 kilograms green malt for mash and yeast, at 17 francs per quintal	1,147.50	.....
150 distilling days, each with 2 ——, at 15.75 francs per quintal	.....	4,725.00
150 distilling days, each with 40 kilograms fresh malt, at 16 francs per quintal	.....	960.00
2. Fuel.		
150 distilling days, each with 1¼ quintals of coals, at 3 francs per quintal	675.00	.....
150 distilling days, each with 1½ quintals of coals, at 3 francs per quintal	.....	675.00
3. Wages.		
1 workman, at 1.50 francs per day; 1 workman, at 1 franc per day	375.00	.....
Board for 2 workmen, at 2.50 francs per day	375.00	.....
1 workman, at 1.65 francs per day; 1 workman, at 1.20 francs per day	.....	427.50
Board for 2 workmen, at 2.70 francs per day	.....	405.00
4. Paying of interest on and amortization of the building principal.		
8 per cent on 8,000 francs	640.00	.....
8 per cent on 12,000 francs	.....	960.00
5. Interest paid on the operation principal, repairs, etc.		
Since the payment of interest on and the amortization of the building principal there has been put into account even the time of suspension of the distillery. Though during this suspension a portion of the buildings and of the utensils may have been used for other purposes than those of distilling, no amount as a balance is placed under this head.		
Total expenses	7,742.50	8,152.50
RECEIPTS.		
81 hectoliters of absolute alcohol, at 105 francs, less sale expenses of 10 francs—95 francs	7,695.00	.....
90 hectoliters of absolute alcohol, at 100 francs, less sale expenses of 10 francs—100 francs	.....	9,000.00
Gain in cash money	.....	848.50
Loss in cash money	17.50	.....
1,500 hectoliters of potato lees with a fodder value, according to Professor Kraemer, at 1.15 francs	1,725.00	.....
1,400 hectoliters of maize lees with a fodder value, according to Professor Kraemer, at 1.95 francs	.....	2,730.00
Total gain	1,707.50	3,578.50

The reasons for the higher rentability of the eastern Swiss grain distillery over the middle Swiss potato distillery lie essentially in the

present cheapness of the grain, in the better using up of the raw material, in the prices for liquors not being lower in spite of the smaller customs duty, and in the larger fodder value of the maize lees.

The production costs of the large concerns have been stated (if we here leave out of consideration the proceeds from lees taken into account in their statement) at 83.85 francs for one hectoliter of 95° of fine spirits (spirits of wine), and at 88.25 francs for the absolute alcohol, by their representatives in a memorial of January, 1885, directed to the alcohol commission of the National Council. But the computation in question was based upon presuppositions, and especially upon prices for raw material which to-day may no longer be considered as normative. One of these above-mentioned industrial gentlemen has thus actually rated his present production costs at 60.25 francs; another, under favorable operation at 55 francs, under unfavorable operation at 60–62 francs, in the medium at 58 to 59 francs.

We think we are, in the face of these communications, entitled to assume 60 francs as a maximum, and more so because the sale prices known to us exclude any higher estimate. For so long as the manufacture is carried on in a canton which has but a gauge-fee protection of 3.30 francs, for so long as the Bernese alcohol manufactories exist with a proceed of 90 francs in the Canton of Bern, of 66½ francs in the Cantons of Valias and Vaud, and of 58½ francs in the whole of the remaining part of Switzerland (whereby in the two last estimates also the business gain of the wholesale dealer is included)—that long it is difficult to assume that their production costs exceed 60 francs. From those 90 francs mentioned, the Bernese manufacturer has, besides that, to cover the cantonal manufacturing tax, averaging 12 francs per hectoliter. At the exportation nine-tenths of the latter are refunded to him by the administration of the gauge fee (intercantonal duties on liquor).

According to our compilation, the 985 distilleries—the production of which is known to us—have produced roundly 50,000 hectoliters of absolute alcohol during the distilling year 1885–86. The respective numbers are to be considered as minimum, except in the case of the larger concerns. Therefore, after all that we have been able to learn in the premises, we believe we do not err if we estimate the real production of the medium and small concerns higher by 15,000 hectoliters than our table shows. At this assumption we obtain a total production of 65,000 hectoliters. Hereto are to be added into the calculation of our domestic consumption the 97,760 hectoliters of absolute alcohol imported in 1885, besides the unascertained production of 37 distilleries subjected to federal taxation and the considerable production of all concerns not subjected to federal taxation. On the other hand, there are to be subtracted the 1,418 hectoliters of ardent spirits and the 2,944 quintals of spirituous liquors exported into foreign countries, as well as the quantity—certainly not inconsiderable—of distilled "waters" (liquors) which, along with the imported 6,149 quintals of methylated spirits, have found use in industrial pursuits and for burning in households.

Considering all the factors, it appears to us that the annual consumption by drinking in Switzerland may be estimated as at least 150,000 hectoliters, i. e., at 10½ liters per capita. In our message of November 20, 1884, we have estimated the annual consumption of ardent spirits on the basis of the then defective knowledge of our home production at 9.4 liters per capita. The corrected amount of this consumption, which brings our country into the foremost ranks of the states where ardent spirits are used as a beverage, is a renewed, earnest sign of warn-

ing to all the elements of public and private life that are called to cooperate in the combat against alcoholism.

This leads us back again to the tasks which in this combat are especially assigned to the Federation, and to the solution which we have attempted to give to these tasks in our bill.

THE ENHANCEMENT OF THE PRICE OF SPIRITS FOR CONSUMPTION.

We do not say this will secure the reduction of the consumption of spirits. This indeed is the chief end of the whole proceeding, but it is attainable solely by the cooperation of a whole series of factors, a great part of which lies outside of the sphere of action of the Federation, as we have explained in our message relating to the revision of the constitution.[1]

The enhancement of the price of spirits will scarcely anywhere directly and by itself contribute to lessen the immoderate consumption. A direct effect upon the consumption is indeed in the nature of the cause denied to any system that does not stop the use of spirituous beverages in its generality. However, the increase of the price of spirits, according to our convictions, in connection with the decrease of the price for beverages not distilled to be effected by our law, and in connection with the moral efforts which the revision of the constitution demands from the cantons and from the individual citizens, will in considerable manner be conducive to the reduction of the consumption of spirits.

It is well known to us that in different countries, in spite of considerable increase of the taxes, the consumption of spirits has not decreased; but it would be entirely wrong to draw therefrom the general conclusion that a greater incumbrance on the spirits would be indeed without any effect. In countries which teem with genuine dramshops and groggeries, and where the principal consumption is due to the same, the saloon keepers know how to meet an increase of the tax on spirits by diluting the beverage, by reducing their big gain, by increasing their traffic; and one may live to see that in spite of the increase of tax the consumption will remain the same, or even increase. Just as little must one be surprised at such an occurrence in those countries which have not a substitute of other spirituous beverages to offer for spirits, or whose legislature encumbers also wine, beer, coffee, tea, etc., with considerable taxes. And even wherever both these conditions coincide it would be thoroughly intelligible if a higher taxation of spirits should not lead to a decrease in consumption. In our country, on the contrary, where the consumption of spirits is not chiefly at home, but in dramshops and saloons where wine, beer, and cider stand at our disposal; where we, with the increase of the price for spirits, contemporaneously connect a release from tax of those healthy spirituous beverages, a real decrease of the consumption of spirits will doubtless take place under the united influence of the different movements; and indeed this decrease will be effected not so much in the consumption in public houses as in the consumption in private houses—in this very consumption which concededly is the most detrimental to the welfare of the country and which to strike down must be our principal endeavor.

The bill submitted to you aims to obtain the increase of the price for spirits by the taxes levied from the distiller and from the importer, and devolved by them upon the wholesale business, and from this upon the factor, and then upon the retailer and the consumer.

If we then consider as essentially normative for the formation of the

[1] *Message* relating to alcohol of November 20, 1884. (Bundesblatt, 1884, iv, 369.)

internal prices the present rates in the world's markets additioned by our custom duties, then the following footholds are resulting for our future conditions of sale.

In the article alcohol the German Empire dominates over the world's market. It is, as is well known, our chief importer. Therefore we connect our consideration with the prices of Germany. The German manufacturers issue special price lists for our country, the rates of which stand about 15½ marks below the German internal notations. This difference must be led back to the refunding of taxes at 16.116 marks, which is guarantied to the exporter on the part of the German fiscus. With respect to this restitution the prices of to-day for export, spirits of wine, exclusive of the barrels, may be quoted at about 24 marks per 10,000 liter per cents. Spirits of wine of 95° bought at this rate, for instance at Leipsic, will cost 39.15 francs per hectoliter on their arrival at our boundaries, namely:

	Francs.
1 hectoliter of 95° spirits of wine, at 24 marks per 10,000 liter per cents, at the cost of 1.24 francs per mark	28.30
Barrel, per hectoliter capacity, at 5½ marks	6.85
Freight from Leipsic to Basel	3.00
Delivery at Leipsic, unloading at Basel, weighing fee, dray fee, etc	.25
	38.40
Addition of 2 per cent for loss in traveling	.75
Total	39.15

Hereto—provided we would rate the import duty, for instance, at 30 francs per hectoliter of absolute alcohol, according to articles 859 of our bill—should be added of customs and additional tax ninety-five one-hundredths of 30 francs, or 28.50 francs, and ninety-five one-hundredths of 85 francs, or 80.75 francs—together, 109.25 francs.

Accordingly, 1 hectoliter of 95° foreign spirits of wine would reach the price of 148.40 francs; 1 hectoliter of absolute alcohol that of 156.20 francs; 1 hectoliter of 50° spirits that of 78.10 francs, without taking into account the business gains of our wholesale men and factors. By taking into account the gain of the different intermediate stages, the future price of the common spirits for consumption would scarcely amount to less than 90 centimes per liter at the above-named custom rate.

The consumption of spirits is on the one side going on in inns and saloons, and on the other side going on in private houses. Under the latter we also count the consumption by parties outside of the inns, as also the consumption in work places and the like. The prominent and pernicious significance of the house consumption in several parts of Switzerland has been the subject of a thorough discussion in our former message relating to alcohol. Here may be added a counterpart from Würtemberg, where, according to official ascertainments of the latest period, the consumption in private houses forms the greater part of the total consumption, amounting in Wangen to five-sixths, in Biberach to seven-tenths, in Ellwangen to six-tenths, and in Heidenheim to seven-tenths thereof.

The consumption in saloons and inns is carried on in smaller, single quantities, glass by glass. The regular consumption in families, the consumption of spirits by parties outside of the inns, etc., requires the procuring of larger supplies. The farmer who uses spirits as a beverage at the different meals, day by day, for himself, his family, his domestics, and his working people must have a little keg of it in his cellar.

The employer of a large number of people needs to have a larger supply—50 or 100 liters, perhaps—when the furnishing of spirits for luncheon belongs to his management.

These two principal kinds of consumption are affected in a very different measure and proportion by the enhancing of the price for spirits. The consumption in saloons and inns, being so very much fractioned, is very difficult to be reached. The host, the intercantonal duty on spirituous liquors being abolished, easily buys 1 liter of spirits of 50° for 40 centimes and sells thereof at least 30 little glasses for 10 centimes each. His gain on one liter is therefore 2.60 francs gross, or 650 per cent. An enhancement of the price of 1 liter by 50 centimes will not yet induce him to sell his little glass higher than 10 centimes. He is better satisfied with a gain of 2.10 francs per liter, or about 235 per cent, which still remains to him, than he would be to diminish his vent, unless (provided competition admits of it) he resorts to rarifying his spirits from the 50 and more degrees now customary in the consumption down to 40°, and in this manner secures advantage[1]. Even the sale tax which we have provided in article 14 of our bill will scarcely change anything in those conditions.

It is different with the family consumption. If the procuring of 50 liters of spirits requires an expense of 90 centimes per liter or 45 francs, instead of 40 centimes per liter or 20 francs, then the question is, whether it were not better and more profitable to procure a real wine for 30 to 35 francs. Certainly it is highly probable that in case spirits are retained and a high price is paid therefor a reduction of consumption will be taken into consideration.

Thus, according to our opinion, the reform which we endeavor to accomplish on the vantage ground of federal legislation positively counteracts the most pernicious form of the immoderate consumption of spirits. On the consumption in saloons and inns, however, the influence of the reform will be felt more indirectly, in so far as the taste of the drinkers is guided into another and better course by the wine, cider, and beer getting cheaper. In order to positively strike in a manner to be felt the consumption of spirits within saloons and inns, we would be compelled to propose to you a tax against which the most serious apprehensions from a technical tax point of view would stand in the way.

In accordance with the constitution, there must remain free from enhancement of price by federal law those spirituous liquors which are exported or which have undergone a treatment excluding use as a beverage (methylation), as also the spirits manufactured from wine, fruit, and their refuses, from fell-wort, juniper berries, and similar materials. The former exemption is supported by the motive that a taxation of the exported or methylated article would appear not as an encumbrance upon our drinkers, but as an aggravation to our industry and our commerce not justified by any reason. The latter exemption is supported by the motive that the spirituous liquors of the categories mentioned in themselves without any excise are so expensive that an abuse of them is of a rare occurrence.

---

[1] We would consider this form of devolution of the tax as a progress as far as hygien is regarded, since the high content of alcohol customary with us essentially contributes to the pernicious consequences of the use of spirits. In the Kingdom of Prussia the ordinary drink spirit, according to a recent official statement, has a strength of 26° to 40°, Tralles; with us the spirits are drunk in a strength of 50° to 55°. The difference alone thus represents by far more than the alcoholic content of common wine.

SECURING A BETTER QUALITY OF POTABLE SPIRITS.

By a better quality we understand spirits most free of fusel oil.

Each raw spirit (low wine) contains a quantity more or less large of fusel oil. This is true of the product distilled from all kinds of materials, and is also true of the product distilled by all kinds of distilling apparatuses, whether incomplete or technically well fitted. The difference is merely one in quantity, according to the materials, the quality of the yeast, the condition of the fermentation, the method of distillation, etc.

The greater part of the spirits coming into consumption are raw spirits. The pernicious effects of the drinking of these spirits are due partly to the quantity of alcohol, but more essentially to their fuselic ingredients. Therefore one of the chief postulates of every combat against the alcohol plague is that the peculiar noxiousness of the spirits coming into consumption is removed by eliminating the quantities of fusel detrimental to health.

This purification is possible. It is achieved by repeated distillation, by which watery component parts of the raw alcohol are removed, and also by the fusel oil being secreted to a certain degree. This is the so-called rectification. Another act of purification is the refining process performed in a chemical or in a mechanical way. At present it mostly consists in the alcohol to be refined being rarified to 48° or 50° and percolated through a series of charcoal filters. By application of both these operations the alcohol loses the fusel entirely or certainly to a minimum of parts. How far each operation is effective by itself alone is evidenced by the statements in figures made by us. The complete rectification and refination causes a loss of volume of about 3 per cent and requires an expense of 4 to 5 francs per hectoliter of alcohol to be purified.

If with greater periodical apparatuses the so-called feints (previous and after courses) are carefully separated from the higher priced middle product (low wines), and otherwise the distilling process is rationally conducted, then, according to the communications from specialists, with the distillation of potatoes with the working force of the apparatus at 80° Tralles, and the distillation of maize at 86° to 88°, a final product is obtained that, without having lost the characteristic smell and taste of its origin, contains but little fusel oil, even without particular rectification or refinement.

With the continually working apparatuses a favorable proportion exists only where alcohol not containing over 88° is produced, and where, besides that, the frequent direct cleaning of the distilling column, or by interruption of the working, indirectly the self-cleaning of the same is provided for. Under these circumstances our manufacturers, with continually working apparatuses, have preferred to rectify their entire product. Several of them have added refinement to rectification.

In the distilleries with periodical apparatuses, as mentioned above, a regular and regulated rectification is rarely introduced. Refinement is more usual, yet even this, as already adduced, is not carried on everywhere with the necessary carefulness and experience, nor also with the required regularity.

Rectification is almost as rare with such a careful management as we have sketched above as the condition of the achievement of a merely moderate content of fusel as the rectification is with the periodical apparatuses.

The separation of the "running before and after" (feints), as such a management presupposes, is, however, as we shall have to state later on, if not entirely rendered impossible, yet charged with increased costs and details by the tax control acknowledged by us as necessary.

After all that has been said, it can not surprise if a series of potato and cereal spirits, originating from smaller steam distilleries which we ordered to be examined with Traube's capillarometer, show a fusel content of 0.35 to 0.50 per cent. More remarkable is the fact already mentioned, that certain potato spirits, unchallenged according to the law of the canton, contained 0.75 per cent of fusel, i. e., a quantity of this stuff which unconditionally may be designated as noxious to health. Spirits against which suit had been brought some months ago on account of their high content of fusel, by virtue of the Bernese decree of 1884, showed 1.5 per cent of fusel on Traube's test.

We do not mean to bring an accusation against the sanitary police of the canton with these figures. The capillarometer is an entirely recent discovery. The former methods of determining fusel were too inaccurate, too circumstantial, and too expensive to have come to a regular and general application and to have yielded reliable results. But as matters stand we were compelled to consider it, in the interest of our national welfare, as absolutely imperative to make it incumbent upon the distillers to care for the purification of the spirits produced by them and destined for consumption. We also considered it proper to place the peculiar institutions for purification of spirits under a standing federal control, aiming at the securing of their purposes. (Articles 3 and 4 of our bill.)

With this obligation incumbent upon the distillers, however, there was not an immediate suggestion of a thorough, absolute purification, such as we have found to be the result of rectification and refinement combined. Such an absolute purification would have the following results: The fusel oil imparts to the spirits a certain smell and taste, betraying the origin, and very much looked after by the drinkers. We recall here an account of the special conditions of our land, particularly of the potato-like taste founded upon the amyl alcohol. A complete purification removes these qualities. Now, it would be extraordinarily difficult to force upon a large circle of consumers for years accustomed to the same, potato-like-taste, another diet from one day to the other. The postulation of the absolute purification, as much as we must advocate it as the ideal, would therefore, it is very likely, lead to what is now already done in single instances, viz, that fusel oil as potato-spirit essence would come into the commerce, and that the rectified spirits, in order to cater to the taste of the drinker would afterwards again be defiled in an uncontrolled quantity. To meet this calamity would be very difficult on the vantage ground of the cantonal control of victuals still unfinished. Now, fortunately, only a very small quantity of fusel is required to create that smell and taste demanded by the consumers—one so very small that it can no longer be designated as directly hurtful to health. According to proofs taken 0.2 per cent of fusel, and even less, is sufficient for this purpose. We therefore conceive the execution of article 3 in such a manner that by official regulation a tolerated limit for the content of fusel is fixed, and a particular purification is made obligatory solely for those products which transgress this limit by their impure component parts. A support for such limit is afforded us by the work of Dr. Baer, already mentioned, who opposes the admission for consumption of spirits that contain more than 0.3 per cent of alcoholic impurities.

This whole proceeding finds an analogy in existing legal provisions relating to the adulterating of wines with gypsum which is not conducive to health, but unavoidable in production and commerce, according to which the content arising by transposition of sulphate of potassium may not exceed 2 grams in 1 liter.

The protection for our consumers would be incomplete if we should prescribe a purification only for those distilled liquors produced in our own country. Therefore, in article 5 of our bill, we have provided that, the transit being reserved, all spirituous liquors serving as beverages and dutiable according to their content of alcohol shall be allowed to be imported merely in a purified state and only at those stations of entry which the customs authority determines as a station for examination. The special execution of this measure is thereby much facilitated, and even to-day but a few stations of entry and deposition for alcohol are in existence.

The insuring of the whole system of purification, however, is sufficiently warranted by an apparatus for the measuring of fusel (capillarometer), lately invented by Dr. Traube in Hanover. This apparatus makes it possible—especially since the application of the improvements recommended by Dr. Schaffer, the chemist of the Canton of Bern, and accepted by the inventor—after some practice for every nonprofessional man to examine any spirits with sufficient certainty, in a few minutes, down to fractions of per cent in regard to its content of fusel.

THE REMOVAL OF INCONVENIENCES CONNECTED WITH THE PRESENT MANAGEMENT OF DISTILLERIES AND SALE OF SPIRITS.

As is seen in our country the small distillery is the prevailing form of the spirit production. These small concerns have worked very unfavorably with us, like in other countries. In many cases, in consequence of their local connection with the residence, of their easy accessibility, of the direct activity of the members of the family, they have become the centers of infection and the taste for spirits seized one inmate of the house after another, planted the habit of drinking, and frequently enough, especially where permits for retailing had to be obtained, infected the surroundings. Another inconvenience is connected with the mode of sale. For the most part, not being in a marketable condition, the spirits must be directly stored away in the closer or farther environs of saloons and inns, and wherever this can be done, customers are looked after and persuaded to give orders. Then follows delivery into the house by team, on credit and free of charges for freight; and just this large quantity, so easily and conveniently acquired—or rather borrowed—causes a consumption more and more increasing. By visits, small payments and further orders are elicited. A certain amount of the debt is willingly left unsettled in order to continually take hold of the small customer, and the dissolution of the relation is getting more difficult for the purchaser. The accustoming to the larger and larger consumption of spirits has then already reached such a degree that economy is practiced in the most indispensable necessaries of life in order to always have an abundance of spirits in the house. The effects of the barter in spirits and the stipulation of wages in the form of this beverage are similar.

Our bill endeavors to remove these evils, full of serious consequences, in two ways. The one by our putting in articles 1 and 2, relating to the efficiency of the distilleries, limits which exceed that which the smallest and therefore, in the direction above indicated, most doubtful

concerns are able to meet, the precept that without the concession of the competent authority no distillery may be established and put into operation, the requirements relating to technical fitting and productive capacity in the conditions for a concession, the system put up for taxation, according to which the whole quantity of the alcohol produced has to pay taxes, in connection with the application of the control-measuring apparatus (capillarometer), to be explained accordingly. These cooperating precepts have for a necessary consequence the disappearance of the small home concerns, whereby, no doubt, a goodly portion of the inconveniences connected with the present state of the distillery business is removed, namely, the wide circulation of the alembic, the accessibility of cheap spirits, the consumption of spirits from which the fusel oil has not been separated at all.

The other way is that we, in article 13, have entirely prohibited the hawking (peddling) of distilled liquors, the retailing of such, and the small trade with the same in distilleries; likewise the soliciting of orders in the residences of such persons in whose management of trade spirits do not find any application. This prohibition has essentially been modeled after the German legislation, therein well approved.

THE REQUISITE FINANCIAL RESULT.

Our bill provides in article 6 for an internal manufacturing tax, graded according to the annual quantity of production of the distilleries, and in article 8 for an import duty, to be levied at the boundary, which in its amount shall correspond with the highest internal manufacturing tax.

According to the demands which we, in article 2, have put to the productive capacity of the concerns admitted to concession for reasons already discussed and later on to be discussed, in the future possibly the smallest distilleries will show an annual production of about 200 to 300 hectoliters of absolute alcohol. The internal tax (revenue) will thus, according to the prescriptions of the above-cited article 6, move between 61 and 85 francs per hectoliter of absolute alcohol, while the import duty for the same quantity will amount to 85 francs.

The present consumption of spirits in Switzerland amounts to at least 30,000,000 liters. We assume the influence of the reform will be so strong as to diminish this consumption during the first years by 6,000,000 liters. The future consumption by drinking would accordingly amount to 24,000,000 liters of spirits or 120,000 hectoliters of absolute alcohol.

The consumption of to-day is covered at two-thirds by the foreign and at one-third by the domestic production. It is difficult to predict how this proportion will shape itself after the bill will be passed, but in order to gain some support for the judging of the fiscal side of our revenue system we hypothetically rate the future importation at 65,000 hectoliters and the internal production at 55,000 hectoliters. The 65,000 hectoliters ordered from abroad have to pay an import duty of 85 francs; on the 55,000 hectoliters of home production shall be paid a duty of 61 to 85 francs, according to the size of the place of production.

Now, we suppose, commensurate with the now existing circumstances, the larged-sized concerns and the more capacious medium concerns would sustain also in the future their present production of, roundly, 30,000 hectoliters; then 25,000 hectoliters would be left to be produced by the small-sized concerns. Inasmuch as these small distilleries—and this may well be presupposed from the tendency of our bill and from

the formation up to this time of the entire distillery business in Switzerland—are operated in the smallest admissible form answering to the production of 200 to 300 hectoliters yearly, according to our suppositions, 30,000 hectoliters of the alcohol quantity produced at home have to render the highest revenue of 85 francs, and 25,000 hectoliters the lowest one of 61 francs.

Under all these suppositions—acceptable, but also concededly bearing merely the character of probability—the following new gross receipts will result: Imports, 65,000 hectoliters; product of the great concerns, 30,000 hectoliters; total of 95,000 hectoliters, at 85 francs, 8,075,000 francs; product of the small concerns, 25,000 hectoliters, at 61 francs, 1,525,000 francs; total of the gross receipts, 9,600,000 francs.

As far as the collection costs are concerned there is, according to article 18 of our bill, firstly, 6 per cent of the import duty to be delivered up to the federal government as fixed contribution toward the administration of customs. This amounts to 331,500 francs. The Federation is also to be indemnified for the expenses for increased protection of the frontiers. We appraise these expenses at 43,500 francs. Thus the entire indemnification accruing to the Federation for the collection of the import duty is 375,000 francs.

If every one of the small inland distilleries produces annually 250 hectoliters, then there are 100 small concerns required for the production of the 25,000 hectoliters apportioned to this category. The other 30,000 hectoliters can be produced by the existing 6 alcohol manufactories and by the 6 steam distilleries, which to-day already produce over 250 hectoliters each annually. As a whole, the fiscus would thus have to deal with, at the highest, 113 distilleries.

The control of the industrial wholesale concerns would be one continuing during the whole year. The agricultural small concerns, however, would have to be regularly superintended only during a few months falling between the months of October and May. We therefore assume that the entire control is concentrated upon seven months. Should each distillery be thus inspected by two officials, each twice in a month, or 14 times in the whole, then the inspections, if the controllers visit daily in common just one single distillery, can be performed during the two hundred and ten days of operation by about 15 officials. Since, however, the supervising officials have also to perform the control over the purification institutions and other functions of a smaller kind, we calculate their aggregate number in the maximum at 25 persons. The control board has to consist of, at the highest, four to five officials and employees. This personal control will require an annual expense of, at the highest, 150,000 francs for salaries, traveling expenses, costs for office, rent, etc.

The controlling measuring apparatuses (capillarometers) to be procured for 113 distilleries at the expenses of the Federation (inclusive of the capillarometers, etc., necessary for the examination of the beverages at the frontier and in the interior) will require an expense, made but once, of about 100,000 francs. We charge each year one-tenth of this sum. We observe a similar proceeding for the round 1,000,000 francs which must be expended for the buying up of the distilling apparatuses to be discontinued according to article 25 of our bill, without taking into consideration the small value of the acquired objects as "funds lost."

We did not put into the budget any costs for magazines for the storage of spirit, etc., proceeding upon the assumption that the private persons interested will either themselves have to erect such or will have to pay a storage duty sufficient for the covering of the costs for those erected by the Federation.

The collection costs recapitulated stand as follows:

			Francs.
Supervision at the frontier:			
Reimbursement to the Confederation			375,000
Supervision in the interior:			
Personal control		150,000	
Measuring apparatuses	100,000		
Buying up of old apparatuses	1,000,000		
	1,100,000		
One-tenth thereof deducted		110,000	
			260,000
Aggregate total			635,000

Hereto would still be added loss of duties, reimbursements to the cantons for their cooperation in the execution of the law, expenses for the gauging and maintenance of the measuring apparatuses, etc. We intend to take into a most sufficient account those factors, and all unforeseen costs, when we at the conclusion estimate the total expenses for administration at 780,000 francs. At the realization of this estimate the law will bring in net receipts of at least 8,820,000 francs or, roundly, 3.10 francs per capita of the population.

* * * * * * *

According to the detailed statement the yearly average proceeds in intercantonal duty and octroi revenue of the 16 cantons and 2 communities which collect import duties on spirituous liquors, amounted to 3,610,000 francs net in the years 1880–1884. The respective numbers are mostly taken from the cantonal reports giving account, but since the latter do not always make clear to evidence the collection costs, therefore we must reserve a verification of the items given for the later settlement of accounts with the cantons.

Next proceeds of the cantonal and communal import duties on spirituous liquors in the years 1880–1884.

Cantons.	1880.	1881.	1882.	1883.	1884.	Total.	Average.
	Francs.	*Francs.*	*Francs.*	*Francs.*	*Francs.*	*Francs.*	*Francs.*
Bern	1,197,363	1,185,416	1,065,952	937,928	1,004,724	5,391,383	1,078,277
Lucerne	360,465	420,307	374,009	380,107	343,117	1,878,005	375,601
Uri	92,416	82,827	53,032	49,124	42,290	319,701	63,940
Obwalden	19,763	20,037	16,109	19,313	20,276	96,098	19,220
Nidwalden	13,553	14,527	13,389	13,230	13,267	67,965	13,593
Glarus	39,463	39,817	45,755	51,590	51,570	228,195	45,639
Zug	16,937	18,505	17,368	17,666	18,077	88,553	17,710
Freyburg	383,896	388,864	346,967	325,794	340,123	1,785,644	357,129
Soleure	271,498	258,910	221,023	213,529	237,289	1,202,249	240,449
Basel City	50,122	46,876	48,714	47,820	43,333	236,865	47,373
Basel County	66,559	60,370	49,411	39,093	35,438	250,871	50,174
Grisons	145,983	167,121	161,108	134,794	166,239	775,245	155,049
Aargau	233,362	193,540	168,570	178,697	157,335	936,504	187,301
Ticino	175,916	180,685	212,029	179,714	140,776	889,120	177,824
Vaud	384,824	343,386	309,481	296,304	319,143	1,653,138	330,628
Valais	37,621	44,581	38,329	29,516	33,862	183,909	36,782
Geneva City	392,629	397,812	392,460	374,305	571,994	1,929,200	385,840
Carouge City	30,336	27,446	25,944	26,246	27,148	137,121	27,424
Total	3,912,706	3,896,639	3,559,650	3,314,770	3,366,001	18,049,766	3,609,953

Article 6 of the transition regulations of the constitution warrants to the cantons and communities concerned at least these net proceeds till the end of the year 1890, and even after 1890 an eventual loss of the same shall not accrue at once in its full amount to parties interested, but only gradually till the year 1895. Since the circumstances after 1890 are not yet exactly discernible and haste for their regulation is not

urgent, we have not yet in our present bill been attentive to the provisions constitutionally provided for the realization of that last-mentioned regulation. The issuing of these provisions can be put off for a special bill, because in all probability special measures will prove themselves necessary only for the communities of Geneva and Carouge, and even for these merely to a comparatively restricted extent.

If we leave entirely out of consideration the transition period of 1890–1895, then the constitution, in article 32, line 4, and article 6 of the transition regulation, gives us the following instruction for the apportionment of the tax: As a general and permanent rule all the cantons shall participate in the net proceeds in proportion to their actual population, ascertained by the last census; but if the shares, calculated according to this measure, do not suffice to reimburse the import duties reported in the above-given table to each canton and each community, then the other cantons shall contribute to the covering of this deficit till the year 1891, in the proportion of their population.

Following this instruction we accordingly obtain the tax repartition presented and hereafter annexed:

Distribution of net proceeds from spirits; revenue of, roundly, 8,820,000 francs.

Cantons.	Actual population of the—		Import duties on liquors in the average of the years 1880–1884.	Distribution after 1895.		Distribution before 1891.	
	Intercantonal duty, cantons in the year 1880.	Noninter-cantonal duty, cantons in the year 1880.		Intercantonal duty, cantons.	Noninter-cantonal duty, cantons.	Intercantonal duty, cantons.	Noninter-cantonal duty, cantons.
			Francs.	*Francs.*	*Francs.*	*Francs.*	*Francs.*
Zurich	.....	317, 576	.....	.....	984, 486	.....	956, 078
Bern	532, 164	.....	1, 078, 277	1, 649, 708	.....	1, 602, 105	.....
Lucerne	134, 806	.....	375, 601	417, 899	.....	405, 840	.....
Uri	23, 694	.....	63, 940	73, 451	.....	71, 332	.....
Schwytz	.....	51, 235	.....	.....	158, 829	.....	154, 245
Untenwalden (above the Forest)	15, 356	.....	19, 220	47, 604	.....	46, 230	.....
Untenwalden (below the Forest)	11, 992	.....	13, 593	37, 175	.....	36, 102	.....
Glarus	34, 213	.....	45, 639	106, 060	.....	103, 000	.....
Zug	22, 994	.....	17, 710	71, 281	.....	969, 225	.....
Freyburg	115, 400	.....	357, 129	357, 740	.....	357, 129	.....
Soleure	80, 424	.....	240, 449	249, 314	.....	242, 120	.....
Basel City	65, 101	.....	47, 373	201, 813	.....	195, 990	.....
Basel County	59, 279	.....	50, 174	183, 740	.....	178, 438	.....
Schaffhausen	.....	38, 348	.....	.....	118, 879	.....	115, 449
Appenzell, Outer Rhodes	.....	51, 598	.....	.....	161, 070	.....	156, 422
Appenzell, Inner Rhodes	.....	12, 841	.....	.....	39, 807	.....	38, 659
St. Gall	.....	210, 491	.....	.....	652, 522	.....	633, 693
Grisons	94, 991	.....	155, 049	294, 472	.....	285, 975	.....
Aargau	198, 645	.....	187, 301	615, 800	.....	598, 030	.....
Thurgau	.....	99, 552	.....	.....	308, 611	.....	299, 706
Ticino	130, 777	.....	117, 824	405, 409	.....	393, 710	.....
Vaud	238, 730	.....	330 628	700, 063	.....	718, 708	.....
Valais	100, 216	.....	36, 782	310, 670	.....	301, 705	.....
Neufchatel	.....	103, 732	.....	.....	321, 569	.....	312, 290
Geneva (without Geneva and Carouge)	.....	45, 663	.....	.....	141, 555	.....	137, 471
Geneva City	50, 043	.....	385, 840	155, 133	.....	385, 840	.....
Carouge City	5, 889	.....	27 424	18, 256	.....	27, 424	.....
Total	1, 914, 706	931, 396	3, 609, 953	5, 935, 588	2, 887, 328	6, 018, 903	2, 804, 015
	2, 846, 102		.....	8, 822, 916		8, 822, 916	

From this calculation it is evident that the cantons levying intercantonal duty and the communities levying octroi will receive before 1891, together, about 2,405,000 francs; but after 1895 about 2,325,000 francs beyond their revenues up to this time. The cantons not levying any

intercantonal duty will receive before 1891 about 2,807,000 francs; after 1895 about 2,887,000 francs. From these sums indeed one-tenth, according to article 32, alinea 4, reserved for certain purposes, and of the other nine-tenths an amount, which can not be exactly ascertained here but which will not be insignificant, must find application for the reimbursement of the cantonal spirit-manufacturing taxes abolished by the passing of a federal law and for compensation of those taxes which have been decreed abolished by alinea 2 of article 32 of the constitution. However this may be, with the exception of the communities of Geneva and Carouge, all parties interested with regard to their participation in the spirit tax will now and later find themselves in an acceptable situation.

We have hereto merely spoken of the financial interests of the cantons. It still remains to us to make mention of the conditions of the federal fiscus.

The Federation has been receiving in import duties on distilled liquors in gross:

	Spirits, alcohol, etc.	Liquor.	Total.
	Francs.	*Francs.*	*Francs.*
1883	1,773,096	86,942	1,860,038
1884	1,995,139	40,667	2,035,806
1885	1,955,221	39,042	1,994,263
Average	1,907,819	55,550	1,963,369

The future federal revenue will amount:

	Francs.
Import of 65,000 hectoliters, at 30 francs	1,950,000
Rebate of customs on the exportation of about 4,000 hectoliters, at 15 francs	60,000
Revenue remaining	1,890,000

The deficit of, roundly, 70,000 francs resulting, according to this calculation, will be covered for a great part by the excess in revenue resulting from the increased customs duties on liquors and spirits in bottles, so that a diminution worth mentioning for the government treasury of the Federation will not occur under the above supposition.

* * * * * * *

We have designated, as the task of the federal legislation in the alcohol question, (1) the enhancement of price of the spirits; (2) the improvement of its quality; (3) the removal of the inconveniences connected with the production in and the sale of the spirits from the distillery, and (4) the attainment of a financial result adapted to the aims of the reform and to the existing conditions.

To these tasks our bill, according to what has been stated, will do justice—(1) by levying a manufacturing tax rising from 61 up to 85 francs per hectoliter (article 6), (2) by encumbering the import with a customs tax of 25 to 40 francs and an additional tax of 85 francs per hectoliter (articles 8 and 9), (3) by prescribing a sale tax to be next fixed by the cantons (article 14), (4) by introducing the obligatory disfuselizing (extraction of the fusel oil) of domestic and foreign brands (articles 3, 4, and 5), and (5) by demanding the taking out of concessions and by laying down rules for the minimum size of a distillery, as also, finally, by prohibiting those modes of trade which have proved themselves as particularly apt for the spread of the spirit plague (*articles 1, 2,* and 13).

We have now to consider the chief interests which are touched by the execution of this task.

SECURING OF THE FEDERAL REVENUES RECEIVED HITHERTO.

The Federation, charged by the reform with the task to introduce and execute a tax the benefit of which accrues to the cantons, must not thereby be curtailed in its own revenues. The tasks incumbent upon it do not stand such a retrenchment, and the constitution has so little thought of such a possibility that it has not a special provision. Therefore we lay down the self-evident principle that the Confederation shall not suffer any loss in its finances by the present legislation. We consider the sliding-customs scale provided in article 9 of our bill as a means for doing justice to this principle by securing the customs revenue received hitherto. We have shown in the preceding upon what suppositions by a frontier custom of, for instance, 30 francs, the aim of preserving undiminished the present federal revenues is attainable. We do not believe that we should enter at this place in a calculating manner upon other suppositions than those given there; it appears to suffice when the interests of the federal fiscus remain preserved in principle.

ATTENTION TO THE AGRICULTURAL AND INDUSTRIAL INTERESTS LYING IN THE DISTILLERIES.

The distillery has its original and natural foundation in the rural economy; the latter furnishes to the former the materials to be worked and receives back from the same products which enable it to further furnish the materials.

The peculiar national economical importance of the production of spirits for agriculture lies essentially therein, (1) that the distillery reduces into a durable, marketable form such agricultural products, the transportation of which in an unworked state does not pay or can not be risked on account of the danger of decay; (2) that it makes possible a larger raising of cattle by its refuse from manufactures—the so-called lees, which represent a cheap fodder for cattle—and has a favorable influence upon the agricultural cultivation by the increase of the production of manure connected therewith.

These qualities of the distillery assert themselves differently with their different raw materials. With grain, which as such already possesses a high transportability, the consideration of the production of lees is prevailing; with beets and molasses the consideration of facilities of commerce. With potatoes the effect of the distillery shows itself the most in both directions. Molasses, in its alcohol-rendering ingredients, is so thoroughly used up through the present technics of the sugar manufactory that it can offer but little more to the distillery; its lees, besides this, have no value at all as fodder and only a moderate one as manure. Beets are so particular in the choice of their soil that where they thrive other plants also can be grown to advantage. Potato culture, however, is for many sections not only useful, but often directly necessary. In many places it is so closely connected that the solution of the mutual relation becomes difficult even when the potato no longer offers a really profitable use.

Merely by later experience it will be possible to establish with indisputable correctness to what degree these general observations are also applicable to Switzerland, which gives itself up to fostering cer-

tain kinds of cultivation, especially that of the potato, under more unfavorable conditions than other countries do.

The conditions previously described, which include economical interests of great consequence, explain the zeal with which husbandry everywhere, and particularly in sections with a soil exclusively adapted to potato culture, steps up where questions relating to the distillery appear on the business calendar of legislative boards. How seriously it treats the question has been shown with us already at the first bill which we had to frame in the cause of spirit manufacturing. Those articles of the constitution that gave to the Federation the right of legislation over the manufacture and sale had a great part of the population in some specifically agricultural cantons for opponents solely for the reason that they feared lest the law to be passed might not carry due respect to their agricultural interests in the distilling business. The exaggeration at that time of their claims, the imputation that any regulation and restriction of the distillery whatsoever should be dispensed with and only a proper raising of the import duty on foreign alcohol should be comtemplated, the want of regard with which the way to the reform having become urgently necessary was obstructed, forced it to earnestly countenance the agricultural opposition and to show to the same that on the present basis the exclusive raising of the import duty on spirits could merely adduce a deterioration of the lamentable conditions, and that the pretended agricultural benefit would be bought in much too dearly by the damage to be expected from its system. Since, then, by the adoption of the articles of constitution, a possibility is given of reforming the noxious formation of the distilling trade, our position to the question of the continuance of our domestic distillery is essentially changed, and we are permitted to unhesitatingly draw these questions into consideration.

THE NETHERLANDS.

LAWS RELATING TO THE TAX ON DISTILLED SPIRITS.

No. 137.] LEGATION OF THE UNITED STATES,
The Hague, December 27, 1895.

Hon. WALTER Q. GRESHAM,
Secretary of State.

SIR: Referring to Department dispatch No. 67, dated October 12, 1894, requesting me to obtain complete copies of the laws and regulations of The Netherlands concerning the use of methylated and unmethylated alcohol in the arts, and to forward them immediately to the Department, I have the honor to inclose herewith a copy of the correspondence which has passed between this legation and the foreign office on the subject, together with the copies of the legal provisions (six accompaniments in all) mentioned in his excellency's note, this day received.

I have, etc., WILLIAM E. QUINBY.

No. 12325.] MINISTRY OF FOREIGN AFFAIRS,
CONSULAR AND COMMERCIAL BUREAU,
The Hague, December 1, 1894.

MR. MINISTER: In compliance with the wish expressed in your note of November 14 last I have the honor to send you herewith the text of various legal provisions relating to the exemption from import duty accorded in The Netherlands to methylated and unmethylated alcohol, namely:

1. A copy of article 2 of the law of July 7, 1865. (Official Gazette, No. 80.)
2. A copy of the royal decrees of September 14, 1872. (Official Gazette, No. 89.)
3. A copy of article 85 of the law of June 20, 1862. (Official Gazette, No. 62.)
4. A copy of the royal decrees of April 20, 1863. (Official Gazette, No. 21.)
5. A copy of the law of December 11, 1893. (Official Gazette, No. 175.)
6. A copy of the royal decrees of August 17, 1894. (Official Gazette, No. 143.)

Accept, Mr. Minister, the renewed assurance of my high consideration.

I. ROELE.

Mr. QUINBY,
Envoy Extraordinary and Minister Plenipotentiary of the United States of America.

SUPPLEMENT I.

[Article 2 of the law of July 7, 1865. State Sheet No. 80.]

We reserve to ourselves to grant, under the necessary precautions against abuse, exemption:

(*a*) From the import duty on wood spirits.

(*b*) From the excise on distilled matter at the strength of at least 85 per cent methylated by wood spirits (made unfit by mixing with wood spirits for the manufacture of beverages therefrom).

SUPPLEMENT II.

No. 97.

EXCISES (DISTILLED MATTERS).

[Enactment of the 14th day of September, 1872.]

(No. 166.) *Provisions relating to the exemption from the import duty on wood spirits and from the excise on distilled matters which are mixed with wood spirits, and that under repeal of the royal decree of the 10th day of October, 1866.*

We, William III, by the grace of God, King of The Netherlands, Prince of Orange-Nassau, Grand Duke of Luxemburg, etc., considering that it is desirable to more generally admit the use of methylated distilled matters, based upon the proposition of our minister of finances of July 3, 1872, No. 39, Import and Export Duties and Excises; having seen article 2 of the law of July 7, 1865 (State Sheet 80[1]), containing more explicit provisions concerning the excise on distilled matters; having reviewed our enactment of the 10th of October, 1866 (State Sheet No. 166[2]); having heard the Council of State (advice of the 23d day of July, 1872, No. 2), based upon the further report of our minister, hereinbefore named, of the 9th day of September, 1872, No. 52, Import and Export Duties and Excises—have resolved and hereby do resolve:

ARTICLE 1. Exemption is granted—

(*a*) From the import duty on wood spirits.

(*b*) From the excise on distilled matter up to the strength of at least 85 per cent, made unfit to serve as a beverage by mixing with wood spirits, the one as well as the other, on the basis of the following provisions:

A. Exemption from import duty on wood spirits.

ART. 2. The exemption from import duty shall be enjoyed only on account of such wood spirits which—

(*a*) Are imported by the administration of excises for the mixing of distilled matters in accordance with this resolution.

(*b*) In quantities of at least 20 hectoliters directly imported from abroad, and which are delivered either from the first office or from the wharf, with pass bill to the government warehouse at Amsterdam or at Rotterdam.

---

[1] Collection No. 59. [2] Idem, No. 148.

ART. 3. On the importation of wood spirits for which exemption from import duty is demanded, this shall be mentioned in the declaration and notice thereof be given in the pass bill.

ART. 4. The shipping of wood spirits with pass bill will occur under surveillance or sealing at the expense of the owner.

ART. 5. On the arrival of the wood spirits at the place of destination the officials shall verify the quantity and afterwards take proof on the basis of article 129, section 4, of the law of June 20, 1862 (State Sheet No. 62[1]), in bottles appropriate thereto, to be furnished by the owners. One of these proofs will, through the instrumentality of the provincial inspector of direct taxes, import and export duties, and excises, be sent to the advisor for scientific, naturalistic, and chemical matters, at the ministry of finances, to be subjected to an examination by a chemist.

ART. 6. If by the chemical examination had in consequence of the previous article, it shall appear that the proof is really wood spirits, then the pass bill shall be cleared, and in the case designated by article 2, lit. *b*, written notice be given to the owner, who then is at liberty to bring the wood spirits into free circulation without the payment of import duty.

B. Exemption from excise for methylated distilled matter.

ART. 7. In order that exemption according to article 1, lit. *b*, may be applicable, 8 liters of distilled matter must be mixed with 1 liter of wood spirits after having been brought to the strength of 100 per cent. The mixed fluid is named methylated distilled matter.

ART. 8. Everyone under observation of the provisions of this enactment is entitled to have distilled matter mixed with wood spirits or to store methylated distilled matter from dealers or tradesmen in this article subject to the provision at the conclusion of article 23.

ART. 9. The mixing of the distilled matter shall be performed in the government warehouses at Amsterdam and at Rotterdam in localities to be designated. Our minister of finances is, however, empowered, under the necessary precautions, also in other places, to give the opportunity for mixing whenever this seems to be necessary.

ART. 10. The wood spirits requisite for mixing are furnished by the administration of excises at the expense of the owner for the price to be determined by our above-named minister, and to be published in the State Currency. This price is not to be put higher than is necessary to cover the purchase price, the insurance and freight costs, and the loss by common leakage and shrinkage.

ART. 11. The quantity of distilled matter offered for mixing with wood spirits must for each owner amount to at least 10 hectoliters or more of the strength named in article 1.

ART. 12. The distilled matter destined to be mixed with wood spirits can with cancellation on the bill be delivered through the branders, distillers, and dealers designated in article 82, section 1, of the above-cited law of June 20, 1862, as if out of the warehouse, the one and the other designated in the same manner as prescribed by the law relating to distilled matter by article 85, section 1. In the information for withdrawal, however, there shall, instead of the subdivisions *d* and *e* of article 87, be made a statement of the community and of the locality where the mixing is to take place. As showing the use intended it shall be stated: "For the purpose of being mixed there with wood spirits."

[1] Collection No. 60, of 1863.

ART. 13. The withdrawal of the distilled matter and the transportation to the warehouse where the mixing has to take place are performed by a freight bill containing the same directions which are prescribed by the subdivisions *a*, *b*, *c*, *f*, *g*, *h*, *k*, *l*, *m*, *n*, and *p* of article 91, section 1, of the above-cited law of June 20, 1862. For the subdivisions *d*, *e*, and *i* the last clause of article 12 of this resolution is in force. In regard to these transportation bills sections 2 and 3 of article 91 and section 5 of article 92 of the just-named law are applicable.

ART. 14. On the arrival of the distilled matter in the locality where the mixing must be performed the quality and the strength thereof are taken down by officials, and the same is, without delay, in their presence, in one or two portions poured into a vessel particularly arranged therefor and therein mixed with the wood spirits. The owner is obliged to procure the workmen necessary in order to pour the distilled matter and the wood spirits over into the vessel in conformity with the directions of the officers, to stir the fluid, and to afterwards again tap it off into casks, flasks, or jugs destined therefor.

ART. 15. Besides the customary designation there is to be entered by the officials of the warehouse upon the transportation bill a declaration in regard to the mixing that has taken place, with a report of the quantity of wood spirits thereunto employed; whereupon they return the bill to the owner for immediate delivery to the receiver of the excises under whose official charge the mixing has taken place.

ART. 16. On the delivery of the transportation bill, in compliance with the preceding article, at the same time against a receipt, the price is paid for the quantity of wood spirits used for the mixing; likewise, where there is occasion for it, the excise, on account of the under measure found by the verification according to article 14 in the quantity of distilled matter, is evidently released on the transportation bill. The receiver makes report of these payments on the transportation bill, and, moreover, forwards this document, whenever it has been delivered elsewhere, back to the dispatching office after the withdrawal in consequence of article 17 had taken place.

ART. 17. The methylated distilled matter must, as a unit or by quantities of at least 2 hectoliters at the same time, be withdrawn from the warehouse, at the latest, on the day following the day on which the mixing has taken place. In special cases the warehouse master or a higher official may concede a longer stay in the warehouse.

ART. 17. (A) Our minister of finances may, upon the request of the owners, and under the necessary precautions against abuse, grant exemption from excise for foreign varnishes manufactured by methylated distilled matter. (Royal enactment of November 1, 1886, State Sheet No. 178.)

ART. 18. The dealers and tradesmen in methylated distilled matters are bound, before they can warehouse, to file at the office of the receiver a subscribed declaration of the storehouses to be used for the raising of the price, wherein also the cadastral circumscription must be reported. In making use of other storehouses declaration thereof shall be made in the same manner.

In the application of this article there are also considered as dealers or tradesmen those who wish to lay in or have in store for their own use more than 25 liters of methylated distilled matter at one time.

ART. 19. The first clause of article 7 of the law of July 7, 1865 (State Sheet No. 80), is not applicable upon the methylated distilled matter and the manufactures produced thereof.

For the withdrawal, transportation, and deposition of more than one liter of such distilled matter a pass bill is required.

The articles 112 and 113 of the frequently named law of the 20th day of June, 1862, are applicable to these pass bills. In the case of article 17 of this resolution the pass bills are issued upon the transportation bills wherewith the unmixed distilled matter has been brought in.

ART. 20. The examination of the strength of distilled matter which is mixed with wood spirits is had in accordance with articles 2, 3, 4, and 5 of our enactment of April 20, 1863 (State Sheet No. 19[1]). If the fluid contains, besides wood spirits, other substances which present the proper statement of the strength by the hydrometer, then the strength is examined in accordance with article 6 of the just-named enactment. The strength thus found, diminished 10 per cent, is recorded as the strength of the distilled matter examined. The articles 7, 8, and 9 of the just-named enactment are likewise in force for the distilled matter here designated, with the understanding that chemical examination according to the last-named article alone takes place when mixing has been performed or is suspected with other volatile substances than alcohol, water, or wood spirits.

ART. 21. The officials are authorized, at the inspection of bonded warehouses wherein methylated distilled matter is stored in accordance with article 129, section 4, of the frequently named law of June 20, 1862, to take proofs as well of such distilled matter as of all other fluids that are present in these bonded warehouses. The user of the bonded warehouse is held to provide the officials with flasks fit for containing the fluid which they deem necessary for proofs.

ART. 22. It is forbidden:

(*a*) To purify, to mix, or otherwise to manipulate methylated distilled matter so that it may serve as a beverage or in general as a spirituous liquor for internal use, or to apply contrivances for such purification, mixing, or manipulating.

(*b*) To report for exportation into foreign countries in accordance with our enactment of April 20, 1863, perfumes, scented waters, or beverages which contain wood spirits. (State Sheet No. 22.[2])

(*c*) To offer for mixing according to article 14 distilled matter mixed with ingredients foreign to it.

The sale as a beverage or other thereby designated liquor of distilled matter wherein wood spirits are present, and the having on hand of such beverage or liquor in ale houses, retailing shops, or other sales rooms, or in the warehouses whereof these localities form a part is considered as equivalent to the violation of the prohibition of lit. *a*.

ART. 23. Saving the instituting of amercement for violation of this enactment, for the application of the penalties threatened by the general law of August 26, 1822 (State Sheet No. 38[3]), by the special laws relating to the excise on distilled matter, and by the law of March 6, 1818 (State Sheet No. 12[4]), in case of abuse the person, company, or association hereby convicted can be deprived by our minister of finances of the privilege to have distilled matter mixed with wood spirits or to store or to have on hand methylated distilled matter.

ART. 24. No drawback of excise according to our enactment of April 20, 1863 (State Sheet No. 22), is granted for varnishes which are to be exported into foreign countries.

---

[1] Collection No. 78.
[2] Collection No. 81.
[3] Not placed in the collection.
[4] Collection No. 150, of 1826.

ART. 25. Our enactment of October 10, 1866 (State Sheet No. 166), is repealed.

Our minister of finances is charged with the execution of this enactment, which shall be published in the State Sheet.

'S GRAVENHAGE, *September 14, 1872.*

WILLIAM.
VAN DELDEN,
The Mininster of Finances.

Published the 27th day of September, 1872.

DE VRIES,
The Minister of Justice.

For compared copy:

BARSTRA,
The General Secretary of the Ministry of Finances.

No. 98.

EXCISES (DISTILLED MATTER).

[Enactment of the 3d of October, 1872. No. 6.]

Instruction for the execution of the royal enactment of the 14th of September, 1872 (State Sheet No. 89), containing determinations relating to the exemption from the import duty on wood spirits and from the excise on distilled matter that is mixed with wood spirits.

ARTICLE 1.

SECTION 1. With the above-named enactment becoming operative the enactment of October 10, 1866 (State Sheet No. 166, collection No. 148), the instruction of October 24, 1866, No. 50 (collection No. 149), and all further administrative prescriptions relating to distilled matter are abrogated.

The difference between the new and the old regulations chiefly consists in that the use of methylated distilled matter henceforth is no longer confined to those that have a special privilege granted to them by the administration, but anyone may have distilled matter mixed with wood spirits or can purchase methylated distilled matter, no matter whether he wants to use it for industrial or private purpose or whether he wants to deal or trade therein. Further, the enjoyment of exemption will no longer be restricted to certain quantities per annum, and one shall thus be able to use as much distilled matter as one wants to.

All acts relating to the mixing of distilled matter and all privileges relating to the storage of methylated distilled matter are repealed, no matter whether they have been issued to manufacturers, or to dealers, or tradesmen. Accounts (No. 31) concerning this exemption need no longer be kept.

ARTICLES 2–6.

SEC. 2. The wood spirits for which exemption from import duty is demanded may also be imported by freight list, conformably to the royal enactment of the 26th of March, 1872 (State Sheet No. 19, collection No. 34). In this case there must be annexed to the settlement of the general declaration, or of the freight list, a pass bill designating the warehouse of destination.

No mention need be made in the freight list of the exemption from the import duty.

SEC. 3. The proofs designated by article 5 are taken from different casks, jugs, or flasks belonging to the same party.

If the officials find that not all of the casks, etc., contain the same liquid, then they take of each species special proofs in double.

The proofs must each amount to at least 1 liter.

The flasks containing the fluid are closed with well-fitting glass or cork stoppers, which must be covered and tied with a piece of bladder.

The officials shall make out a report of their proceedings and deliver the same, together with the proofs, immediately to their comptroller, in order to be sent as speedily as possible to the provincial inspector.

SEC. 4. The result of the chemical examination will without delay be communicated by the advisor to the respective provincial inspector, who will give the necessary orders for further action in the cause.

On finding that another species than wood spirits has been imported, amercement is instituted in consequence of article 213 of the common law of the 20th of August, 1822 (State Sheet No. 38), and notice given thereof to the receiver who has delivered the pass bill. The notice to the owner relating to the clearing of the pass bill is given through the warehouse master.

After the clearing, the proofs of the wood spirits not sent away are again placed at the disposition of the owner.

ARTICLE 7.

SEC. 5. In calculating the quantity of wood spirits to be employed for the mixing of one part of distilled matter, the latter must not, as usual, be brought to the strength of 50 per cent, but to that of 100 per cent. Thus, for instance, one part of distilled matter of the volume of 10 hectoliters of 85 per cent must be mixed with $\frac{8.50}{8}=1.06$ hectoliters of wood spirits.

According to the second clause of this article the distilled matter mixed with wood spirits must be shown under the denomination "Methylated distilled matter," in all declarations, documents, reports, etc.

ARTICLE 9.

SEC. 6. The privileges granted by the enactment of the 10th of October, 1866, to mix distilled matter with wood spirits elsewhere than at Amsterdam or at Rotterdam remain in force.

ARTICLE 10.

SEC. 7. The price of the wood spirits remains for the present determined at 27 centimes[1] per liter. In case of modification of the price, communication thereof shall be made in the collection of laws, enactments, etc.

ARTICLE 13.

SEC. 8. The transport bills are issued from the register, No. 9, *b* (excises).

As far as it is necessary it is remarked that the instructions in these transport bills need not extend further than to the place where the mixing must be performed, because the document is canceled there and substituted by one or more passports bills. (See article 19, last clause.)

[1] Since the 1st of April, 1893, 25 centimes.

ARTICLE 14.

SEC. 9. It is incumbent that the mixing of the distilled matter be performed with the greatest care.

Inspection fee is no longer demanded. Of each mixing a report is taken down by the officials charged therewith and delivered to the warehouse master, who transcribes upon the bill the quantity of wood spirits used in connection with the storage made in behalf of the administration.

The warehouse master sends, on the 1st day of January, April, July, and October, to the chief director, a statement of the quantities of wood spirits which were on hand at the end of the past quarter.

ARTICLE 16.

SEC. 10. The receipts concerning the wood spirits are booked in a separate register, No. 8.

In the acquittances issued thereout to the owners are also reported the quantity and strength of the distilled matter, likewise the office of delivery, the date, and the number of transport bill.

The designated receipts, moreover, are in the usual manner transferred into the cash book, of which the seventh column is used, and accounted for in monthly and balance statements under the rubric "Various Government receipts," the one and the other under the denomination of "Receipts concerning wood spirits used for the mixing of distilled matter."

SEC. 11. In the month of January of each year the warehouse master submits to the comptroller a specified list of the mixings performed during the last year. The comptroller closely examines whether the price of the wood spirits used for the mixing has been duly demanded, charges, if necessary, the receiver with the amount which has been levied too small or not accounted for, and enters a notice of the one and the other upon the designated list, which thereupon is fastened by him to the register wherein the receipts are booked.

ARTICLE 17.

SEC. 12. As has been already remarked, the methylated distilled matter is sent from the place of mixing to that of destination with pass bills No. 10 (excises). The quantity must, without regard to strength, amount to at least 2 hectoliters for each pass bill.

ARTICLE 18.

SEC. 13. By the declarations here designated—to be written into register No. 1 (excises)—the storehouses, in consequence of article 196 and section 19 of the above-mentioned general law, are subjected to inspection by the officials.

Besides the special prescriptions relating to the depots within the inspection district no visitation—except, of course, in the storehouses of dealers and tradesmen—must take place except under the provisions of article 200 of the general law.

The comptrollers must see to it that of the right of inspection—more especially in storehouses of private people—no further use be made than is concomitant with a good supervision.

ARTICLE 19.

SEC. 14. The legal provisions relating to the transport of distilled matter are likewise in force for the methylated distilled matter. There-

fore, for the same pass bills are requisite wherein the strength of the fluid must be reported. Quantities of 1 liter and below, however, may, without regard to the strength, be transported without bill.

ARTICLE 20.

SEC. 15. In consequence of this article the strength of fluids which merely consist of alcohol, wood spirits, and water must be determined by means of the usual hydrometers, thermometers, and tables, besides the prescribed diminution by ten one-thousandths.

Whenever, therefore, the instruments named show a content of 84 per cent, then the strength of the fluid amounts to $84-8\frac{4}{10}=75\frac{6}{10}$ per cent.

Methylated distilled matter that is mixed with other substances than water is racked into the usual distilling utensils before the strength is taken, entirely in the same manner in which this is done with the liquors and varnishes. (Compare also the conclusion of this article.)

ARTICLE 22.

SEC. 16. However much confidence the mixing of distilled matter with wood spirits in general may deserve, it is necessary to be armed with provisions of penalties against each and any endeavor to apply methylated distilled matter for taxable purposes. The possibility always exists of covering, in a certain measure, the peculiar smell and taste of the wood spirits by addition of strongly aromatic materials. It is also said that a means may be invented for removing entirely or in part the wood spirits from distilled matter. With a view of the one and the other the provisions of letters *a* and *b* in the last clause of this article have been adopted in the enactment.

The officers in their inspections must keep in view that not every distilling of methylated distilled matter is forbidden. Such a prohibition is not necessary, because the usual distilling has no influence upon the methylating power of the wood spirits.

If the distillation, however, goes on connected with the addition of substances which can render the distilled matter fit for taxable use, or with the application of other means for the attainment of this purpose, then penal proceedings must be instituted.

ARTICLE 23.

SEC. 17. Close attention is invited to the words "of a strange kind" in lit. *c* of this article. If, for instance, it be found that distilled matter offered is already mixed with wood spirits, then this resolution is transgressed. But "oil of bad liquor" (fusel oil), such as is commonly present in crude distilled matter, does not prevent mixing.

SEC. 18. Whenever the officials are in doubt whether that which they find in their inspection or examinations is connected with the transgression of one of the prohibiting provisions of the respective article, yet according to their opinion no sufficient ground exists for immediate penal action, they must, nevertheless, take proofs in the usual manner, in order to have one of them submitted to chemical examination by mediation of the chief director.

ARTICLE 24.

SEC. 19. This provision is taken from article 39 of the repealed enactment of October 10, 1866.

ARTICLE 25.

SEC. 20. The new enactment is promulgated on the 27th of September, and goes into effect, therefore, on the 17th of October instant.

Compared with the original.

BARSTRA,
The Secretary-General.

SUPPLEMENT III.

[Extract—Article 85 of the law of June 20, 1862. State Sheet No. 62.]

SECTION 1. Upon application therefor made, exemption from excise on the requisite distilled matter is granted in behalf of vinegar manufactories and of state, provincial, and communal institutions of instructions in the physical sciences.

SEC. 2. We reserve to ourselves:

(*a*) To fix the requisite precautions relating to this exemption, for its regulation and application as well as for the prevention of abuses.

SUPPLEMENT IV.

[Staadsblad (State Gazette) of the Kingdom of The Netherlands.]

(No. 21.) *Resolution of the 20th of August, 1863, containing determinations relating to the exemption from excise on the domestic distilled matter.*

We, William III, by the grace of God, King of The Netherlands, Prince of Orange-Nassau, Grand Duke of Luxemburg, etc., having seen the report of our minister of finances, of the 13th of February, 1863, No. 4 (Acc.); based upon article 85 of the law relating to the excise on the domestic distilled matter of the 20th of June, 1862 (State Sheet No. 62), whereby we have reserved to ourselves to fix the demanded precautions and further determinations concerning the exemption from excise on the domestic distilled matter necessary in behalf of vinegar houses, and of state, provincial, or communalty institutions of instruction in the physical sciences; having seen the royal resolution of June 12, 1847 (State Sheet No. 30), and our resolution of May 6, 1852 (State Sheet No. 101); having heard the Council of State (advice of the 3d of March, 1863, No. 7); having seen the further report of our minister of finances, of the 15th of April, 1863, No. 131 (Acc.); have resolved and hereby do resolve:

ARTICLE 1.

Our minister of finances is empowered to determinate the sort and the quantity of distilled matter which for each vinegar house and institution of instruction may be stored. The determination is made according to the want, supported by true evidence, or, in default thereof, according to the extent or compass of the factory or of the institution, in connection with what experience teaches in regard to the want of other factories or institutions of like kind. The exemption is regulated either over one whole year or in proportion to the compass of determinated business.

ARTICLE 2.

The exemption from excise is not granted to vinegar manufacturers who within the distance of 100 yards of their vinegar house have a brandery, distillery, or magazine for distilled matter, or within that distance carry on a wholesale business or other trade in distilled matter; nor in behalf of a vinegar house whenever this or the ground whereupon it is situate has communication with or borders on a brandery or distillery or to the ground upon which such brandery or distillery is situate.

An exemption granted is forfeited whenever one of the cases designated by the first sentence of this article occurs subsequently.

Our minister named above is, however, empowered to admit exceptions thereto, but merely in case the business of the vinegar house is of such kind that the mixing of the distilled matter in the utensils and with the elements for the preparation of vinegar can be performed without danger of later abuse; and, further, only in so far as relates to the grant which is in existence at the time of this resolution becoming operative or independent of him who enjoys the exemption, may subsequently be established.

ARTICLE 3.

He who demands the enjoyment of exemption must apply for it to the minister of finances by a petition containing the following statements:

1. The name, the trade or calling, and the residence of the petitioner.
2. The firm whereunder a vinegar house is to be carried on.
3. The kind of vinegar house or institution for which the exemption is requested.
4. The community where the same is situate, the denomination or other information, and, for a vinegar house, the cadastral section and number.
5. The elements, except distilled matter, which shall be used for the preparation of vinegar.
6. For an existing vinegar house, the quantity of vinegar manufactured in the last year; the kind, the number, and the capacity of the instruments used therefor; and for one newly established, the quantity of vinegar which it is intended to be yearly produced and the kind, the number, and the capacity of the instruments used therefor.
7. The kind and quantity of distilled matter for which yearly exemption is requested.
8. The point of time wherein, in a new vinegar house or in one having been out of operation, business shall begin.

The above-mentioned petition, if such be the choice, may be delivered to the comptroller of excises of the district wherein the vinegar house or institution is situate.

ARTICLE 4.

The exemption is granted by our above-named minister to the vinegar manufacturer or other owner by issuing an act of exemption.

The act states the kind and quantity of the distilled matter which during the period of one year, on behalf of the vinegar house or institution, may be stored; further, through the vinegar houses, if necessary, the maximum quantity of distilled matter which for each operation, may be used up, in proportion to the capacity of the apparatuses or to

the quantity of the elements to be operated; likewise the manner in which the distilled matter according to article 7 must be mixed.

The act remains in force for each following yearly period, save the determination by article 17 and save such modifications as after its issue may be made therein by our above-named minister.

ARTICLE 5.

Each yearly period of exemption commences with the 1st of January. If an act is issued in behalf of a vinegar house or institution wherein business begins at another point of time, then during the current year for the time elapsed from the beginning of the business till the last day of December a quantity of distilled matter can be stored in proportion to the quantity fixed for one whole year, unless another determination may have been made by the act.

The same rule is applied upon the increase or decrease of the quantity which yearly can be stored whenever an act during the course of a year's period is modified or substituted by another, to be calculated from the date of the modification or of the new act.

ARTICLE 6.

Storing of distilled matter under enjoyment of exemption from excise must not be made in a smaller quantity than 5 vats, calculated after reduction to the strength of 50 per cent.

Our minister of finances is, however, empowered to permit the storing of smaller quantities whenever any necessity for it exists on account of the use of small apparatuses or for want of sufficient room for storing in magazine the methylated distilled matter.

ARTICLE 7.

At the above mentioned storing in vinegar houses the distilled matter is mixed with the other requisite elements—vinegar and water, or other substances which are innocuous for the manufacture of vinegar, yet make the distilled matter unfit for common use—and in the proportion and manner which by our minister of finances shall be prescribed in the act of exemption.

Therein at the same time is determined whether the substances for the mixing must be procured by the vinegar manufacturer, or shall be furnished at his expense by the administration of taxes.

ARTICLE 8.

The mixing is immediately performed after the verification of storage, in the presence of the officers charged therewith.

The vinegar manufacturer is obliged to stir well the distilled matter after the mixing, or to have it done by his workmen in a manner that the officials consider well done.

Of the element—the vinegar or other substances—procured by the vinegar manufacturer wherewith the mixing is done, and, in case the official consider it necessary, likewise of the distilled matter, separate proofs will be taken by them, in the manner of article 129, section 4, of the law of June 20, 1862 (State Sheet No. 62), in bottles adapted thereto and furnished by the vinegar manufacturer.

Of each mixing a written report is made by the officials, which, together with the proofs, is delivered to their comptroller.

The bottles, at the latest within two months, are again placed at the disposition of the vinegar manufacturer, together with what has been left over of the proofs after the examination. If the vinegar manufacturer does not satisfy the obligations incumbent upon him by this article, or does not procure the substances for the mixing, or if they are not of such a quality as is prescribed by the act, then the issuing of the transport bill will be denied by the officials, saving the application of article 15, whenever any reason for it exists.

ARTICLE 9.

To each vinegar manufacturer in possession of a charter who requires to lay in for supply a larger quantity of distilled matter than can be mixed at once, and thus be really stored with exemption, under running account for the excise, this is granted, in virtue of article 85, section 2, *b*, of the above-cited law of June 20, 1862, provided that he assign for it in or next to his vinegar house a magazine which shall exclusively be used for the deposition of the distilled matter.

In this magazine no distilled matter must be present that in a larger or lesser measure contains elements—vinegar or other substances—wherewith the mixing by storage in vinegar houses is prescribed, or in which provable traces of a mixing of that kind are present. If at the gauging of the magazine distilled matter thus mixed be found, then this will not be included in the gauging, saving the application of article 15.

ARTICLE 10.

He who by virtue of his charter demands to lay in distilled matter under enjoyment of exemption from excise is bound:

(*a*) Whenever the delivery of the distilled matter is done by a brander, distiller, or dealer under the same receiving office under which the laying in must take place, to put an identical declaration upon the statement for withdrawal of the deliverer, or to file one separately, as is prescribed by article 87, section 4, of the above-cited law of June 20, 1862.

(*b*) Whenever the delivery of the distilled matter is done by a brander, distiller, or dealer under another office, to file previously with the receiver under whose office the storage must take place an identical declaration as is prescribed by article 88, section 1, of the above-named law, whereupon the determinations of sections 2–6 of that article are declared as applicable, with the exclusion of that relating to the giving of security for the excise.

(*c*) Whenever the withdrawal of the distilled matter from its magazine, designated in the previous article, be completed, to make a like declaration for the withdrawal, as is prescribed by article 87, section 1, of the same law.

The declaration designated under *a*, *b*, or *c* must not exceed the quantity of distilled matter for which exemption from excise can still be enjoyed or the year's period in which the storage must be done.

ARTICLE 11.

For withdrawals, transports, and storage of distilled matter destined to be stored under enjoyment of exemption from excise—without difference whether the withdrawal is made from a brandery, distillery, or common magazine for running account, or from the magazine designated by article 9—in accordance with article 102 of the above-quoted

the quantity of the elements to be operated; likewise the manner in which the distilled matter according to article 7 must be mixed.

The act remains in force for each following yearly period, save the determination by article 17 and save such modifications as after its issue may be made therein by our above-named minister.

ARTICLE 5.

Each yearly period of exemption commences with the 1st of January. If an act is issued in behalf of a vinegar house or institution wherein business begins at another point of time, then during the current year for the time elapsed from the beginning of the business till the last day of December a quantity of distilled matter can be stored in proportion to the quantity fixed for one whole year, unless another determination may have been made by the act.

The same rule is applied upon the increase or decrease of the quantity which yearly can be stored whenever an act during the course of a year's period is modified or substituted by another, to be calculated from the date of the modification or of the new act.

ARTICLE 6.

Storing of distilled matter under enjoyment of exemption from excise must not be made in a smaller quantity than 5 vats, calculated after reduction to the strength of 50 per cent.

Our minister of finances is, however, empowered to permit the storing of smaller quantities whenever any necessity for it exists on account of the use of small apparatuses or for want of sufficient room for storing in magazine the methylated distilled matter.

ARTICLE 7.

At the above mentioned storing in vinegar houses the distilled matter is mixed with the other requisite elements—vinegar and water, or other substances which are innocuous for the manufacture of vinegar, yet make the distilled matter unfit for common use—and in the proportion and manner which by our minister of finances shall be prescribed in the act of exemption.

Therein at the same time is determined whether the substances for the mixing must be procured by the vinegar manufacturer, or shall be furnished at his expense by the administration of taxes.

ARTICLE 8.

The mixing is immediately performed after the verification of storage, in the presence of the officers charged therewith.

The vinegar manufacturer is obliged to stir well the distilled matter after the mixing, or to have it done by his workmen in a manner that the officials consider well done.

Of the element—the vinegar or other substances—procured by the vinegar manufacturer wherewith the mixing is done, and, in case the official consider it necessary, likewise of the distilled matter, separate proofs will be taken by them, in the manner of article 129, section 4, of the law of June 20, 1862 (State Sheet No. 62), in bottles adapted thereto and furnished by the vinegar manufacturer.

Of each mixing a written report is made by the officials, which, together with the proofs, is delivered to their comptroller.

The bottles, at the latest within two months, are again placed at the disposition of the vinegar manufacturer, together with what has been left over of the proofs after the examination. If the vinegar manufacturer does not satisfy the obligations incumbent upon him by this article, or does not procure the substances for the mixing, or if they are not of such a quality as is prescribed by the act, then the issuing of the transport bill will be denied by the officials, saving the application of article 15, whenever any reason for it exists.

ARTICLE 9.

To each vinegar manufacturer in possession of a charter who requires to lay in for supply a larger quantity of distilled matter than can be mixed at once, and thus be really stored with exemption, under running account for the excise, this is granted, in virtue of article 85, section 2, *b*, of the above-cited law of June 20, 1862, provided that he assign for it in or next to his vinegar house a magazine which shall exclusively be used for the deposition of the distilled matter.

In this magazine no distilled matter must be present that in a larger or lesser measure contains elements—vinegar or other substances—wherewith the mixing by storage in vinegar houses is prescribed, or in which provable traces of a mixing of that kind are present. If at the gauging of the magazine distilled matter thus mixed be found, then this will not be included in the gauging, saving the application of article 15.

ARTICLE 10.

He who by virtue of his charter demands to lay in distilled matter under enjoyment of exemption from excise is bound:

(*a*) Whenever the delivery of the distilled matter is done by a brander, distiller, or dealer under the same receiving office under which the laying in must take place, to put an identical declaration upon the statement for withdrawal of the deliverer, or to file one separately, as is prescribed by article 87, section 4, of the above-cited law of June 20, 1862.

(*b*) Whenever the delivery of the distilled matter is done by a brander, distiller, or dealer under another office, to file previously with the receiver under whose office the storage must take place an identical declaration as is prescribed by article 88, section 1, of the above-named law, whereupon the determinations of sections 2–6 of that article are declared as applicable, with the exclusion of that relating to the giving of security for the excise.

(*c*) Whenever the withdrawal of the distilled matter from its magazine, designated in the previous article, be completed, to make a like declaration for the withdrawal, as is prescribed by article 87, section 1, of the same law.

The declaration designated under *a*, *b*, or *c* must not exceed the quantity of distilled matter for which exemption from excise can still be enjoyed or the year's period in which the storage must be done.

ARTICLE 11.

For withdrawals, transports, and storage of distilled matter destined to be stored under enjoyment of exemption from excise—without difference whether the withdrawal is made from a brandery, distillery, or common magazine for running account, or from the magazine designated by article 9—in accordance with article 102 of the above-quoted

law of June 20, 1862, a transport bill is given, containing the same statements as are prescribed by the subdivisions *a* to and including *n* and *p* of article 91 of this law, and in the case provided by lit. *b* of the previous article, together with the date and the number of the voucher of the statement designated thereby.

At the storing the distilled matter is always verified by the officials and a declaration is put by them upon the transport bill, in behalf of the usual design that the mixing has taken place in accordance with the act; after which they give the bill back to the owner, to be immediately delivered up to the receiver under whose office the exemption has been enjoyed.

The receiver enters the stored quantity of distilled matter into the account prescribed by the following article, makes report thereof on the bill, just as with the excising on account of an undermeasure found at the storing, and sends the transport bills delivered elsewhere back to the office of delivery.

ARTICLE 12.

The receiver under whose office the exemption from excise is enjoyed keeps with each owner a running account concerning the quantities of distilled matter declared for storage and really stored by him during each year's period.

The receiver named is responsible for the excise relating to storings for which he delivers transport bills on declarations in accordance with article 10, lit. *a* or *c*, or vouchers of declarations according to article 10, lit. *b*, which are not founded on proper charters or exceed the quantity which in accordance with the last sentence of that article can be declared for storage.

ARTICLE 13.

The vinegar manufacturer enjoying exemption, or any other owner, is obliged, yearly, on the 30th or 31st day of December, to file at the office of the receiver where the exemption is enjoyed a written and signed report of the quantity of distilled matter stored under exemption from excise, mixed or unmixed, which at the close of the year is still unused on his hands, and, as far as the vinegar houses are concerned, the sort and the quantity of vinegar manufactured during the year elapsed.

The distilled matter on hand, mixed and unmixed, is considered as first storage for the new yearly period, and as such is brought into the account designated in the preceding article.

He who is negligent in making the above-named statement is compelled by the receiver, through a warning, to satisfy it within two days. In no case is storage admitted for a new yearly period so long as this statement is not made.

On the giving up of the vinegar manufacturing trade, or the transfer of it to another person, or at the disbanding of an institution of instruction, he in whose name the exemption is granted, and in case of his failure, the manager must immediately give notice thereof to the office of the receiver, together with a like statement, so far as the elapsed part of the year is concerned, as is prescribed by the first sentence.

In these cases the mixed distilled matter still on hand can be conveyed to the new owner after he has received an exemption charter, or can be delivered on pass bill to another vinegar manufacturer, and the

unmixed distilled matter can be withdrawn; also that raised in price in accordance with article 9, under payment of the excise or for storage under credit.

ARTICLE 14.

The officials of the Government taxes are entitled, if empowered by their comptroller or by the respective receiver, within eight days after the close of a period of one year, likewise in cases provided by the fourth sentence of the preceding article, to take up the distilled matter stored under exemption from excise, either mixed or unmixed, no matter whether the statement or declaration prescribed by that article be already filed or not.

They are, besides that, always entitled to ascertain, in the vinegar houses where distilled matter stored under exemption is worked upon, the mixed distilled matter on hand, the other elements, and the vinegar present in the apparatuses or in casks, jugs, tubs, and ground vats; to also ascertain the capacities of these apparatuses; and, further, to take proofs for the institution of an examination.

ARTICLE 15.

It is forbidden—

(*a*) On storing under exemption to offer to the officials for verification and mixing distilled matter which in a larger or smaller measure contains elements—vinegar or other substances—wherewith the mixing by storage in vinegar manufactories is prescribed, or in which provable traces of a mixture of that kind are present.

(*b*) On storing under exemption to offer to the officials for verification and mixing a quantity of distilled matter smaller than that shown by the respective transport bill to have been withdrawn, with the understanding, however, that a difference in the under measure of two one-thousandths or less of the quantity withdrawn calculated after deduction to the strength of 50 per cent is not considered a transgression.

(*c*) To withdraw otherwise than in accordance with article 11 or 13 distilled matter, mixed or unmixed, from a vinegar house or an institution of instruction in behalf of which exemption from excise is enjoyed, or from one of the magazines designated in article 9.

(*d*) To add in a vinegar house to the mixed distilled matter substances apt to separate from the mixed matter the elements—the vinegar or other substances—wherewith the mixing is performed.

(*e*) To have on hand in a vinegar house, elsewhere than in the magazine designated by article 9, other than properly mixed distilled matter.

(*f*) To mislead or to attempt to mislead the officials by offering them for the mixing false or other than the prescribed elements—vinegar or other substances.

For practicing that which has been forbidden by this or the preceding articles, or for not complying with or satisfying that which thereby is prescribed, he who enjoys the exemption by virtue of article 135, section 2, of the above-cited law of June 20, 1862, will be fined because of transgression of this resolution, in addition to the penalty fixed by the law for unlawful withdrawal, transport, or storage of distilled matter.

In addition to that, the exemption can be forfeited in the cases provided by the twelfth sentence of article 9, and by lits. *a*, *c*, *d*, *e*, or *f* of this article.

ARTICLE 16.

The act of exemption granted is forfeited—

(a) In the cases provided by the second sentence of article 2 and by the recalling of the exemption by virtue of the last sentence of the previous article.

(b) By the giving up of a vinegar manufacturing trade, by the transfer of it to another person, or by the disbanding of an institution of instruction.

(c) Whenever during two consecutive yearly periods no distilled matter is stored.

ARTICLE 17.

Besides the case of interruption of the vinegar manufacturing trade in consequence of the suspension or demolishing of the vinegar manufactory, or of any other cause from which the giving up of the business follows, there shall be deemed equivalent to the giving up—

(a) The removal of the vinegar house into another community.

(b) The omission to apply for a patent for a new year of service, because this is required for the exercise of the trade.

(c) The nonresumption of the business after it has been continuously interrupted for one year or longer.

(d) Bankruptcy.

ARTICLE 18.

The vinegar manufacturer in whose behalf the exemption is granted has to pay an inspection fee of 60 cents to the officers charged with the verification at the storing and with the oversight at the mixing.

For the issuing of a warning in accordance with article 13, 25 cents costs are placed into the account.

ARTICLE 19.

The provisions of this resolution are declared also applicable upon exemptions from excise on domestic distilled matter already granted.

The existing acts remain in force as long as no modification thereof is made by our minister of finances, with the understanding that the strength of the distilled matter stated in the acts in concordance with the prior legislation is deducted from the strength in alcohol per cents in accordance with the above-quoted law of June 20, 1862, in the proportion of 2 per cent to 1 per cent alcohol, according to the prior legislation.

If in the acts the beginning of the yearly period be determined for another point of time than the 1st of January, then the period entered upon is closed with the 31st day of December, 1863, save proportionate calculation of the storings on the basis of article 5.

ARTICLE 20.

At the becoming operative of this resolution there are repealed the royal resolution of June 12, 1847 (State Sheet No. 30), and our resolution of May 6, 1852 (State Sheet No. 101).

Our minister of finances is charged with the execution of this resolution, which is to be published in the State Sheet.

'S GRAVENHAGE, *April 20, 1863.*

WILLIAM.
G. H. BETZ,
The Minister of Finances.

Published the 16th day of May, 1863.

DE KOCK,
The Director of *the Cabinet of the King.*

SUPPLEMENT V.

[Staatsblad (State Gazette) of the Kingdom of The Netherlands.]

(No. 175.) *Law of the 11th of December, 1893, containing determinations relating to exemption from taxes for some foreign goods.*

In the name of Her Majesty, Wilhelmina, by the grace of God, Queen of The Netherlands, Princess of Orange-Nassau, etc., we, Emma, Queen Dowager, Regentess of the Kingdom—To all who shall see or hear read this, greeting—make known:

Whereas we have taken into consideration that it is desirable to exempt some foreign goods from tax, therefore it is that we, after hearing of the State Council, and with common deliberation of the States-General, have approved and consented to, as we hereby approve and consent to:

SINGLE ARTICLE.

We reserve to ourselves, by common regulation of administration, under the necessary precautions against abuse, to grant exemption—

(*a*) From the import duty on chemicals, dyeing materials, and other substances of this kind necessary as auxiliaries in manufactories and traffics.

(*b*) From the excise and import duty on distilled matter, being present in natural products at the importation, destined for institutions of instruction in the physical sciences.

We charge and command that this shall be put into the State Sheet, and all the ministerial departments, authorities, colleges, and officers whom this concerns shall see to its exact execution.

Given at 's Gravenhage, the 11th of December, 1893.

EMMA.

PIERSON,
The Minister of Finances.

Published the 20th day of December, 1893.

SMIDT,
The Minister of Justice.

SUPPLEMENT VI.

[Staatsblad (State Gazette) of the Kingdom of The Netherlands.]

(No. 143.) *Resolution of the 17th of August, 1894, containing determinations relating to exemption from excise and import duty on distilled matter being present in natural products at the importation.*

In the name of Her Majesty, Wilhelmina, by the grace of God, Queen of The Netherlands, Princess of Orange-Nassau, etc., we, Emma, Queen Dowager, Regentess of the Kingdom, upon the report of the minister of finances of June 21, 1894, No. 56, Import Duties and Excises; having seen the law of the 11th of December, 1893 (State Sheet No. 175), containing determinations relating to the exemption from taxes on foreign goods; having heard the Council of State (advice of July 17, 1894, No. 8), based upon the further report by the minister

of finances of August 13, 1894, No. 3, Import Duties and Excises—have resolved and hereby do resolve:

ARTICLE 1.

Distilled matter, being present in natural products at the importation, destined for institutions of instruction in the physical sciences, is under the following determinations exempt from the excise and from the import duty.

ARTICLE 2.

On the importation of distilled matter for which the exemption is demanded this is reported in the declaration prescribed by article 120 of the general law of the 26th of August, 1822 (State Sheet No. 38). Upon this declaration, after security for excise and import duty has been given, a pass bill is delivered wherein also that request is reported.

The distilled matter is considered to have a strength of 95 per cent.

ARTICLE 3.

The distilled matter, together with the pass bill, is transported under seal to the institution of instruction for which it is destined, and there stored in the presence of officials of the import duties and excises.

They will not proceed to the taking off of the seals until after there has been placed in their hands the written declaration by the chief of the institution that the distilled matter reported in the pass bill has been received by him and shall be destroyed whenever it is no longer used for the preservation of natural products.

ARTICLE 4.

If the declaration designated in the previous article should be wanting, or whenever in any other respect the prescriptions of this resolution should not have been observed, then the pass bill will not be cleared.

ARTICLE 5.

In case of abuse, the minister of finances may forbid any further free importation of distilled matter in which the institution of instruction is concerned.

The minister of finances is charged with the execution of this resolution, which shall be put into the State Sheet, and whereof a copy shall be sent to the council of state.

SOESTDIJK, *August 17, 1894.*

EMMA.
SPRENGER VAN EYK,
The Minister of Finances.

Published the 3d day of September, 1894

VAN DER KAAY,
The Minister of Justice.

BELGIUM.

LAWS RELATING TO THE TAX ON DISTILLED SPIRITS.

No. 93.] LEGATION OF THE UNITED STATES,
Brussels, November 30, 1894.

Hon. W. Q. GRESHAM,
Secretary of State,

SIR: In compliance with instructions contained in your dispatch No. 85, I have applied to the Belgium minister of foreign affairs in order to be furnished at as early a date as possible with complete series of the laws and regulations of the Government of Belgium regulating the use of both methylated and unmethylated alcohol in the arts.

In answer to my request, I have just received a letter from Count de Merode, a copy and translation of which I have the honor to inclose herewith.

As will be seen, there are in Belgium no laws or regulations governing the use of alcohol in the arts. It is, however, to be noticed that a partial reduction of the excise tax is allowed on alcohol contained in the different kind of liquors and in perfumed waters destined for exportation. Articles 142 to 153 of the law of July 18, 1887, a copy of which I also inclose herewith, determine the conditions for obtaining this reduction.

I have the honor, etc., JAS. S. EWING.

MINISTRY OF FOREIGN AFFAIRS,
Brussels, November 28, 1894.

MR. MINISTER: I have the honor to inform your excellency, as a result of a communication from my colleague of the department of finance, that in Belgium no legal disposition permits the exemption from payment of excise taxes on alcohol, methylated or not, destined for industrial purposes. There thus exists neither a law nor a regulation relative to the use of alcohol in the arts.

However, a partial reduction of the excise tax is allowed on alcohol contained in spirits and in perfumed waters for exportation. Articles 142 to 153 of the law of July 18, 1887, determine the conditions for obtaining this reduction.

Your excellency will find under this fold a copy of the law above referred to.

The present letter answers the dispatch that your excellency had the kindness to address me under date of the 22d of last October.

Please accept, Mr. Minister, etc.,

MERODE WESTERLOO.

No. 2034.

EXCISES.

Codification of legislation on brandies.

OSTENDE, *July 18, 1887.*

Leopold II, King of Belgium.

To all to whom these presents shall come, greeting:

The Chambers have adopted and we sanction the following.

CHAPTER I.

FOREIGN BRANDIES.

BASIS AND PERCENTAGE OF DUTIES.

ARTICLE 1. Section 1. Alcoholic liquids distilled abroad are subjected in proportion to the quantities imported to the following entrance duties:

Brandies of every kind:		Per hectoliter.
In casks at 50° or less of the alcoholometer of Gay-Lussac, at the temperature of 50° of the centigrade thermometer	francs.	100
In casks for every degree above 50°	do..	2
In bottles, and liqueurs without distinction of degree	do..	200
Other alcoholic liquors	do..	134

Sec. 2. Fractions up to five-tenths of a degree are neglected; beyond that they are regarded as 1 degree.

ART. 2. Sec. 1. Alcoholic liquids, whatever be their degree, imported in quantity of at least 1 hectoliter, may be stored as deposits in public or private warehouses.

Sec. 2. Any less quantity necessitates payment of duty in cash.

ART. 3. Imported alcoholic liquors are subjected, as relates to the declaration, at entrance and in transit and storage in public or private warehouses, to the rules applicable to dutiable merchandise in general.

CHAPTER II.

HOMEMADE BRANDIES.

SECTION 1. BASIS AND PERCENTAGE OF EXCISE—EXEMPTIONS AND DEDUCTIONS.

1. *Dutiable vessels.*

ART. 4. The excise on brandies produced in the country is levied according to the capacity of the vessels used for steeping, macerating, and fermentation of raw material suitable for distillation, comprising the gathering vats, the yeast vats, the quick vats, the condensers, and all other vessels, whatever be their form, that contain macerated substances in fermentation or fermented, and which do not comply with the conditions of exemption spoken of in article 12 hereafter.

2. *Percentage of excise.*

ART. 5. The percentage of excise for the various categories of raw material enumerated in article 7 is fixed according to the output noted by the agents of the administration, to which output there is applied the rate of discharge mentioned in article 135.

ART. 6. Sec. 1. The tax is to be collected, aside from the exception hereafter given regarding distilleries of seed fruit and stone fruit, for every day or for every working period and per hectoliter of gross capacity of the different vessels comprised in article 4 and not specially exempted, at the ratio of a single renewal of material for every twenty-four hours in distilleries in general, or, at the choice of the distiller, for forty-eight hours in distilleries of feculent substances. The distiller who works more rapidly is bound to pay a proportional supplementary duty, to be calculated on the additional capacities utilized for the maceration and fermentation of substances.

Sec. 2. By day or by working period serving as the basis of the duty is meant the actual day from midnight to midnight, or the succession of two actual days from midnight to midnight, during which either steeping, maceration, or fermentation of substances, or distillation or rectification is performed. The days or the periods during which the work is not continual are counted as entire days or periods.

Sec. 3. The duty for the maceration, the fermentation, and the distillation of seed fruit and stone fruit, without mixture of other material producing alcohol, is calculated on the quantities of macerated or fermented material, estimated according to the gross capacity of the vessels used. Nevertheless, if the gross capacity of the still, multiplied by the number of boilings declared, presents a quantity greater than that of the macerated or fermented substances, the entry shall be increased by the difference.

ART. 7. The rate of excise duty calculated conformably to articles 5 and 6 are established as follows, according to the different categories of substances:

ART. 8. The minister of finances may, under the condition which he shall determine, range in one or the other categories or substances enumerated in article 7 the grain or other raw materials which shall be newly employed in the manufacture of brandies.

ART. 9. Sec. 1. The Government is authorized to modify once a year the legal output serving to establish the duty of excise on the manufacture of brandies, according to the facts recorded by the agent of the administration.

Sec. 2. The royal decree fixing the rate of the duties to be collected is published in the Moniteur in the course of the month of July, and submitted to the legislative chambers at the beginning of the ordinary session.

ART. 10. The new excise duties fixed by the royal decree, of which there is mention in section 2 of the preceding article, are applicable to the work of manufacture performed beginning with the day when that decree becomes effective; the declarations of work in course of performance shall cease to be effective on the day before at midnight. The minister, however, may grant facilities in this respect to distillers of feculent material who work forty-eight hours.

3. *Vessels exempt from duty.*

ART. 11. The following may be exempt from duty:

1. In all distilleries—

(*a*) Fills and distilling columns serving either for distilling or boiling raw material or for the rectification; that is to say, for the boiling of low wine.

(*b*) Condensers, the capacity of which does not exceed 3 hectoliters and which consist of tubes in which the substances can not remain,

such as tubular condensers, called heating boxes, through which the substances merely pass during distillation.

2. In distilleries of feculent substances—

(*a*) Vessels serving to cook, grind, or crush the substances or to dilute the malt previous to maceration.

(*b*) Maceraters.

(*c*) Cooling apparatus intended to lower the temperature of the products on issuing from the macerators and before they are introduced into the fermenting vats.

3. In distillers of Jerusalem artichoke and beets—

(*a*) The receptacle and the juice tank in which the juice of Jerusalem artichoke or beets obtained by pressure is received, provided their united capacity is not greater than that of the smallest fermenting vat comprised in the declaration of work.

(*b*) The boilers or other vessels employed to cook the Jerusalem artichoke or beets or to heat the juice.

(*c*) The cooling vat intended to lower the temperature of the juice extracted from the Jerusalem artichoke or cooked beets,

(*d*) The washtubs called maceraters, serving to extract the juice by methodical washing of the husks of Jerusalem artichoke or beets.

(*e*) The vats or open boilers intended to receive and heat the residuary liquors utilized for the maceration in the said washtubs.

(*f*) The diffusers and heaters, serving to extract the juice by the process of diffusion.

(*g*) The cooler which may be employed to lower the temperature of juice obtained by diffusion.

(*h*) The vessels used in distilleries of beets, and serving exclusively to transfer from the vats into the distilling columns the fermented husks or the liquid called dregs.

(*i*) The basin intended to hold in reserve the yeast deposited at the bottom of the fermenting vats.

(*j*) The special vessels serving in distilleries to saccharify the juices and to prepare them before fermentation.

4. In distilleries of molasses—

(*a*) The tubs, tanks, and all vessels of any sort intended to keep molasses in reserve.

(*b*) The special vessels serving, as the case may be, to heat this molasses before pouring it into the fermenting vats.

ART. 12. The exemption from duty provided by the preceding article is subordinated to the fulfillment of the conditions and obligations imposed by articles 51, 53, 54, 55, 56, 61, 86, 87, 104, and 108.

4. *Exemption from excise for Sundays and legal holidays.*

ART. 13. Sec. 1. No tax is due for Sundays and legal holidays when the distiller has stipulated in the declaration prescribed by article 38 that he does not intend to perform on those days any work of steeping, maceration, or cooling of substances, nor any work of distillation or rectification.

Sec. 2. In the discount to be established at the expiration of every declaration to ascertain the number of renewals, the number of Sundays and legal holidays during which the distillers declare that they do not perform any work are omitted.

ART. 14. Sec. 1. The distiller admitted to the enjoyment of the exemption from tax granted by section 1 of article 13 is forbidden to maintain on Sundays and legal holidays any fire under the boiler or *still*, which are to remain empty.

Sec. 2. The boilers or stills serving exclusively for rectification may, however, remain charged with water or with low wine during the days in question.

ART. 15. The legal holidays mentioned in the present law are the first day of the year, Ascension, Assumption, All Saints, and Christmas.

ART. 16. The provisions of articles 13 and 14 are not applicable to the distillers of seed fruits and stone fruits.

5. *Exemption from excise in favor of distillers who are rectifiers and of dealers in liquors.*

ART. 17. The rectifying distillers—that is to say, those who do not use raw material and whose work consists solely in rectifying either low wines or alcohol—are exempt from every excise duty.

ART. 18. The provisions of article 17 are applicable to liquor dealers who manufacture liquor by means of alcohols, sugars, or perfumes extracted from certain aromatic substances and who use for this operation stills or other distilling apparatus.

6. *Deduction of duty granted to agricultural distillers.*

ART. 19. Sec. 1. To distillers there is granted a deduction of 15 per cent on the amount of duty when—

(*a*) They use only two sets of apparatus, one serving solely for boiling, the other serving solely for the rectification of low wine.

(*b*) If they feed in the precinct of the distillery and during the whole of the duration of the work, either 1 head of large stock (not including horses) or 4 hogs or 8 sheep for every 1½ hectoliters of the capacity of the vessel subjected to the duty.

(*c*) If they cultivate themselves, at a distance of 5 kilometers at most from the shops, 1 hectare of land admitting the plow, vegetable gardens or meadows for every 1½ hectoliters of the capacity of the vessel subject to the duty.

Sec. 2. This deduction is not granted—

(*a*) When the total amount of substances macerated exceed, respectively, 40 hectoliters per day or per working period, according as the work is done in twenty-four or in forty-eight hours.

(*b*) When the work performed by the distiller is subject to the entire duty in the course of the operating season from the 1st of July of one year to the 30th of June of the following year.

(*c*) To distillers interested either directly or indirectly in the exploitation or in the ownership of several distilleries, if these establishments are at least 5 kilometers apart from each other.

(*d*) To distillers of seed fruit and stone fruit.

ART. 20. When the work in the agricultural distilleries takes place in forty-eight hours, the number of heads of stock and hectares of land spoken of in section 1 *b* of article 19 is calculated in proportion to one-half the capacity of the dutiable vessels.

ART. 21. Sec. 1. The restriction established by section 2 *b* of article 19 is not applicable by virtue of the distillation of quantities of beets or Jerusalem artichoke, which involves during part of the operating season the payment of the entire duty.

Sec. 2. The period during which the distillation of beets or Jerusalem artichoke may be performed by agricultural distillers without boiling, under the obligation of section 2 *b* of article 19, cited above, is fixed as follows:

For beets, from the 1st of September to the 31st of March; for Jerusalem artichoke, from the 1st of October to the 1st of April.

ART. 22. The distiller who intends to enjoy the deduction of 15 per cent shall produce before the receiver of excise of his jurisdiction, before beginning the work of the operating season, a list showing the number of heads of stock, the sheep, and the number of hectares of land which he cultivates, as well as a declaration by which he certifies that he is not interested, either directly or indirectly, in the exploitation or in the ownership of several distilleries at least 5 kilometers apart from each other.

SECTION 2. PROVISIONS APPLICABLE TO DISTILLERS IN GENERAL.

1. *Establishment of distilleries.*

DECLARATION OF POSSESSION.

ART. 23. Sec. 1. No one shall open a new distillery or restore an old one to activity without having made a declaration thereof in writing to the receiver of excise of the jurisdiction at least three days before the beginning of work.

Sec. 2. The declaration states—

(*a*) The given names, profession, residence, and commercial shares of the proprietor, owner, or stockholders, as well as the same information as to the manager or steward of the distillery.

(*b*) The name of the commune, hamlet, street, quay, and all other information requisite to designate clearly the situation of the distillery.

(*c*) The exact description of the room, shops, storeroom, and other dependencies of the distilleries. This description comprises among other things (under the head of "Storerooms and other dependencies of the distilleries") the tanks and other reservoirs, as well as every room, cellar, or court in which there exists a vessel, a conduit, or any utensil whatever belonging to the distilleries.

(*d*) The number of exits from the shop and the number of public roads terminating there.

(*e*) The number, marks, and capacity of the vessels used in cooking, steeping, maceration, cooling, or any other preparation of the material before fermentation, as well as the vessels serving for the fermentation of the material

(*f*) The number marks. and capacity of the stills or boilers and the distilling columns; their special purpose, whether to boil or to rectify low wines or to heat the water necessary for maceration.

(*g*) The number, marks, and capacity of collecting vats, yeast vats, quick vats, and condensers.

(*h*) Finally, the number, marks, and capacity of vats and tanks intended to serve as reservoirs of brandy.

Sec. 3. The purchaser, tenant, lessee, and manager of a distillery in activity can not enter into possession without having beforehand made this declaration.

BELL AND SIGN.

ART. 24. The distillers are bound to place a bell before the principal entry of their establishment and to cause to be fixed above every exit from the shop giving access to the public road a sign painted in oil and bearing the word "Distillery."

UTENSILS, TUBES, PUMPS, ETC.

ART. 25. The dutiable vessels shall have a fixed place in the interior of the shop.

ART. 26. It is forbidden to use—

(*a*) Dutiable vessels the walls of which are indented or grooved.

(*b*) Vessels with movable borders or any other means suitable for increasing their capacity.

ART. 27. The fermenting vats shall be so arranged that it shall always be possible to approach them without any hindrance in order to examine the interior as well as the tubes entering into them.

ART. 28. The upper edges of the fermenting vats must not be more than 5 centimeters thick. If the walls of the vessels exceed this thickness the upper extremity shall be cut at a bevel outward, the inclined part making the vertical and angle of 45 degrees at most.

ART. 29. The tubes and pumps serving to conduct substances from one vessel to another must always be visible, and so arranged as to be easily superintended.

GAUGING AND NUMBERING OF VESSELS.

ART. 30. Sec. 1. The capacity of all dutiable vessels or such as may eventually become such shall be ascertained by filling, with the exception of the distilling columns, the gauging of which is effected by metric and integral cubature, and without any deduction of the interior compartment and tubes of these columns.

Sec. 2. The contents of the other vessels designated in article 23 shall be ascertained by metric gauging.

Sec. 3. The distiller shall be invited to be present at every operation of filling, emptying, or gauging.

Sec. 4. The employees shall draw up a statement of the gauging in triplicate, one copy of which is sent to the distiller. They shall mention therein, as the case may require, his absence or his refusal to sign that act.

ART. 31. The distiller who believes himself harmed may, within the three days following the gauging of the dutiable vessels of his shop, demand the counter verification thereof.

ART. 32. Employees may, by virtue of a written authorization of a functionary having at least a degree of comptroller, proceed always to a counter verification by filling the vessels subject to duty.

ART. 33. When employees have informed a distiller that they intend to proceed to the counter verification by filling one or more dutiable vessels of his shop, no declaration of change may or can be made for the said vessel as long as the operation of gauging is not terminated.

ART. 34. The distiller shall at every demand of the employee present the vessel comprised in the protocol of gauging. These vessels are numbered, and bear a visible mark in an oil color indicating their number and capacity.

CHANGING OR REPAIRING UTENSILS.

ART. 35. When a distiller wishes to make any alteration in the plans of his distillery, or to repair, alter, or replace one or more of the vessels included in the protocol of gauging, he must previously make a declaration thereof to the receiver of excise of the jurisdiction; he may not use them again until they have been gauged or recognized by the employees.

DISTILLERIES OUT OF WORK—SALE, LEASE, LOAN, ETC., OF UTENSILS OR APPARATUS.

ART. 36. Sec. 1. Every owner of a distillery out of work, of apparatus of distillation, of helmet (capital) stills, or worms is bound to make a declaration thereof to the receiver of excise of his jurisdiction.

Sec. 2. The following are excepted from this obligation—

(*a*) Directors of auction sales, mechanical constructors, coppersmiths, and other artisans who by profession sell, manufacture, or repair these utensils; provided that these are not immured or otherwise fixed so as to be stationary.

(*b*) Pharmacists and chemists, when the capacity of the vessel does not exceed 50 liters and is not used to manufacture brandies.

Sec. 3. Distillers and holders of the utensils designated in sections 1 and 2 shall not sell, rent, loan, or otherwise transfer them to third parties without making a declaration thereof to the receiver of excise within twenty-four hours.

ART. 37. Sec. 1. All the apparatus of a distillery out of work other than that designated in section 2 of the preceding article shall be placed under seal at the expense of the administration. The employees proceed in this operation according to the manner prescribed in article 30, sections 3 and 4, mentioning in the protocol the number of seals or stamps attached to each utensil.

Sec. 2. The depositor is bound to produce at every demand the utensils thus placed under seal.

2. *Work of manufacture.*

DECLARATION OF WORK.

ART. 38. Sec. 1. Before proceeding to work, distillers shall make a special declaration for an uninterrupted series of five days at least and of thirty days at most.

This declaration shall only comprise vessels included in the protocol of gauging.

Sec. 2. They shall place it in the hands of the receiver of excise of the jurisdiction at the latest on the day before the substances are first put in to steep and be macerated.

Sec. 3. When during the course of a declaration the distiller wishes to increase the number of vessels employed, he makes a supplemental declaration in the manner prescribed above, which is admitted for the number of days remaining on the original declaration.

Sec. 4. The total capacity of the collecting vats, the quick vats, the condensers, and all other vessels which take the place thereof shall not exceed by more than one-twentieth the capacity of the smallest macerating vat of the distillery.

Sec. 5. In drawing up the report which precedes no account will be taken of the condensers exempt from duty by article 11, No. 1, letter *b*, or of the macerating vats and the collecting vats the capacity of which does not exceed 1 hectoliter.

Sec. 6. No declaration will be admitted for vessels which are not in the condition prescribed by the two preceding paragraphs.

ART. 39. Sec. 1. The declaration to be made in conformity with the preceding article by distillers other than those who distill seed fruit or stone fruit, states:

1. The name, profession, and residence of the declarers.
2. The indication of the distillery by sign and location.
3. The duration of work.
4. The day on which the substances were first put in to steep or macerate.
5. The day when the work ends.
6. The number, marks, and capacity of the vats which he intends to use for steeping, maceration, fermentation, or collecting raw materials *suitable for* distillation.

7. The number, marks, and capacity of yeast vats, quick vats, or condensers which he will use to contain macerated or fermented substances.

8. The number, marks, and capacity of vessels serving to cook, grind, or dilute the substances; maceraters, coolers, stills, and distilling columns which he intends to submit to duty.

9. The same indication as regards the vessels and apparatus which he intends to have exempt from duty.

10. Whether he intends to claim for Sundays and holidays the exemption from excise fixed by article 13, section 1.

11. Whether he wishes to enjoy the deduction fixed by article 19; and if so, whether he will satisfy all the conditions imposed in the law in order to obtain this reduction in tax.

12. The designation of raw material used; and if he uses Jerusalem artichoke or juice of Jerusalem artichoke, beets or juice of beets, the mode of work which will be followed for the preparation and the fermentation of the substances.

13. Whether he intends when not using maceraters to use before real and complete cooling or dilution of substances utensils similar to the said apparatus.

Sec. 2. The work shall not begin before the distiller has obtained a copy of his declaration, delivered by the receiver of excise.

REGISTER OF DECLARATION OF SUBSTANCES PUT IN FOR MACERATION AND DISTILLATION AND NOTEBOOK SHOWING THE SITUATION OF THE WORK.

ART. 40. Sec. 1. Distillers are bound to have in their shops a register, on which they shall inscribe separately for every vat the macerations as they take place and the distillation at latest at the moment when the substances are begun to be transfused into the still or into the distilling column.

Sec. 2. None shall be excused from keeping the register mentioned in the preceding paragraph but distillers of feculent substances who do not use maceraters and who work in twenty-four hours with dutiable vessels of a total capacity less than 30 hectoliters.

Sec. 3. The dispensation mentioned in section 2 shall not be granted on these conditions, but on the condition that they state in their declaration of work and for each vat the day and hour of every maceration and every distillation.

ART. 41. The distillers shall be also bound to keep in their shops a notebook on which the employees note the situation of the work.

ART. 42. The register and notebook prescribed by articles 40–41 shall be furnished by the administration, which determines their form.

SIMULTANEOUS EXISTENCE AND USE OF DIFFERENT KINDS OF RAW MATERIALS.

ART. 43. In distilleries in activity where it has been declared that no use is made of unbolted flour derived from barley malt, from rye, from ordinary barley or oats not having previously undergone any preparation before being put in to macerate except grinding, there shall not be kept in the shop or in dependencies other grain or seeds, such as rice, maize, millet, wheat, etc., in grains or in flour, sprouted grain other than barley, cooked grain, or grain artificially dried.

ART. 44. The presence of bolted flour, a bolter, or other apparatus that may serve for bolting, shall not be permitted in the shop or its dependencies unless the distiller has declared that he wishes to use the said flour.

ART. 45. All flour of feculent substances from which any part of the

bran has been extracted shall be considered as bolted flour, and so also of all grain or seeds that have been entirely or partially stripped of their coats.

ART. 46. The following substances shall not be used or even kept simultaneously, to wit:

(*a*) In the same distillery and in its dependencies—

Jerusalem artichoke, juice of Jerusalem artichoke, beets, juice of beets or any other root or sugared juice, and molasses, sirup, concentrated sugared juices, or sugar.

(*b*) In the same shop or storeroom of a distillery—

1. Cereals, potatoes, or other feculent substances, and Jerusalem artichoke, juice of Jerusalem artichoke, beets, juice of beets, or any other root or sugared juice.

2. Cereals, potatoes, or other feculent substances, and molasses, sirup, concentrated sugared juices, or sugar.

WORK OF STEEPING, MACERATION, AND FERMENTATION.

ART. 47. The steeping, maceration, and fermentation can not be done in other vessels than those declared for that use.

ART. 48. Sec. 1. The maceration shall take place by following the order of the number given by the gauging protocol to the vats comprised in the declaration of work. Nevertheless, vats used in a supplementary way may be used for maceration before or after all the others, but only up to the first interruption of the manual work by a Sunday or legal holiday.

Sec. 2. The minister of finances may grant exceptions from the preceding provision under exceptional circumstances.

ART. 49. The macerated and fermented substances shall not be transfused into any other vessel than the quick vats, the condenser, the collecting vats, the still, or the distilling apparatus.

ART. 50. It is forbidden, in distilleries where the work is subject to a rate of duty lower than that required in case a macerater is employed, to perform the work of maceration in ordinary dutiable vats otherwise than by the aid of rakes or scrapers worked by hand.

APPARATUS SERVING TO COOK, GRIND, OR CRUSH THE SUBSTANCES AND DILUTE THE MALT BEFORE MACERATION.

ART. 51. Sec. 1. Apparatus serving to cook or crush substances or to dilute malt previous to maceration may be employed under exemption from duty under the following conditions:

(*a*) The capacity of the cooking and crushing apparatus combined, or the capacity of each of these vessels, or also the capacity of the malt-diluting apparatus, either with that of the cooking or the crushing apparatus, shall not be greater than the capacity of the macerater.

(*b*) Each one of the apparatuses shall be provided at its lower part with a stopcock, enabling one to superintend its working .

(*c*) The hour of filling shall be inscribed separately for each one of the apparatuses in the register prescribed in section 1 of article 40.

(*d*) The substances contained in different apparatuses shall be transfused exclusively into the macerater, and then, either directly or by passing through the cooler, into the fermenting vats for which they are intended according to the inscription in the register of which there is mention under letter *c*.

(*e*) The distiller shall leave empty as many fermenting vats as there are fillings of substances in the apparatus for cooking, crushing, or *diluting*, and in the maceraters.

Sec. 2. When the united capacity of two vessels for cooking, crushing, or diluting are not greater than that of the macerater, these vessels shall be counted only as one as regards filling.

ART. 52. It is forbidden in distilleries where the work is not subject to higher duty than that required in the case of employment of feculent substances of the first kind, such as indicated in article 7—

(*a*) To use boilers or apparatus serving to cook the substances before being put in to macerate.

(*b*) To raise the temperature of the raw material contained in the macerater after the work of steeping and after their mixing with the barley malt—that is to say, before macerated, properly so called.

WORK IN THE MACERATERS.

ART. 53. The maceraters may be employed under exemption from duty provided the distiller undertakes the obligation—

(*a*) To inscribe separately, as prescribed by section 1 of article 40, each operation of steeping effected in the maceraters.

(*b*) To leave entirely empty, from the moment when the raw material is introduced in the macerater up to the moment when it is transfused, a fermenting vat of a capacity of at least equal to 20/11 of the capacity of the maceraters. Nevertheless, in case several maceraters are employed for one and the same fermenting vat the filling of the first macerater may be effected as soon as there exists in the vats an empty space bearing the same relation to the capacity of the macerater. The limit of that empty space shall be indicated by two copper bands, or, if the vat is covered, by an overflow stopcock.

(*c*) To transfuse into a single and identical vat—a fermenting vat declared for that purpose—the total amount of material beaten down in every macerater.

(*d*) To abstain from all work in maceraters and to leave these vessels entirely empty on Sundays and legal holidays, exempt from duty.

(*e*) Not to use maceraters in any case in order to ferment substances therein.

ART. 54. Distillers who use feculent substances may use maceraters only if all the work done in the shop is subject to one of the rates of duty required in case of works by the aid of that apparatus.

COOLING OF SUBSTANCES.

A. BEFORE THE INTRODUCTION OF SUBSTANCES INTO THE FERMENTING VATS.

ART. 55. Apparatus to cool substances when issuing from the maceraters and before they are introduced into the fermenting vats may be employed under exemption from duty under the following conditions—

(*a*) The capacity of the cooling apparatus shall not exceed that of the macerater from which it receives the material.

(*b*) The material contained in the cooling apparatus shall not be transfused into a fermenting vat other than that for which it is intended according to the inscription in the register described by section 1 of article 40.

(*c*) The stopcock serving for the discharge of material, which, if present, must be placed at the lower part of the cooler, shall remain permanently open even outside of the time when the material passes to fill the fermenting vat.

ART. 56. When material stays in the cooling apparatus the distiller shall leave completely empty as many ordinary fermenting vats as there are maceraters and cooling apparatuses in which the material stays.

That obligation shall not exist if the material merely passes through the cooling apparatus without stopping there, but in both cases the running out of the whole amount of material from the macerater into the cooler and from the latter vessel into the vat for which the substances are intended, according to the inscription in the register prescribed by section 1 of article 40, shall take place without interruption.

B. AFTER THE INTRODUCTION OF MATERIAL INTO THE FERMENTING VATS.

ART. 57. Sec. 1. It is forbidden in distilleries where the work is subject to a rate of duty less than that required under the head of "Employment of the macerater," to utilize, if the case should arise, the double envelope of the macerating vat, or use movable or fixed worms or other similar apparatus or new processes, such as the cooling of substances by means of ice, before the real and complete cooling or dilution of substances.

Sec. 2. The cooling or dilution may be considered as real and complete when the temperature of the total amount of material contained in the fermenting vat is less than 45° C.

YEAST BASIN.

ART. 58. The capacity of the yeast vat shall not exceed 25 liters, and the distillers shall use only one of them per 30 hectoliters of dutiable capacity. The prohibition established in article 49 shall not apply to the yeast vats.

WORK OF DISTILLATION.

ART. 59. The provisions of article 58 concerning the order of maceration of substances are made applicable to distillation.

ART. 60. The beginning of distillation in the case provided in section 3 of article 40 shall not be anticipated or delayed by more than one hour.

ART. 61. Sec. 1. The exemption from duty provided by article 11, No. 1, letter *a*, in favor of stills and distilling columns, shall not be granted except under the condition that there shall exist in the vessels declared for duty an empty space equal to at least nine-tenths of the gross capacity of each of the stills or distilling columns containing material to be distilled.

Sec. 2. The term empty space shall not mean the unfilled space of vessels containing material newly beaten down and macerated, nor the space of one-tenth necessary for fermentation.

Sec. 3. The condition of having the empty space shall not be required when the material contained in the still or in the distilling columns is boiling. The boiling shall be considered to exist when low wine is flowing through the worm, the lower orifice of which must be exposed, or when the material has acquired a temperature of at least 80° C.

Sec. 4. Before the low wine begins to run the employees may, if the empty space does not exist in the vessels subject to duty, cause the discharging stopcock of the still to be opened in order to make sure that the vessel contains no raw material.

RECTIFICATION OF DETERIORATED BRANDIES.

ART. 62. Sec. 1. Outside of the time of work declared the distiller may rectify the work of deteriorated or weakened brandies by evaporation below 45° of the alcoholometer of Gay-Lussac, at the temperature of 15° C. He shall make for this purpose a declaration, without payment of duty, in the form indicated in article 127.

Sec. 2. This declaration shall not be definitely admitted until the employees shall have ascertained it to be exact.

Sec. 3. As regards deteriorated brandies deposited in the warehouse by virtue of article 154, they shall not be taken out except by furnishing bond for the tax which shall be due for collection from the party for the liquid which shall not have been returned to the warehouse on the terms fixed by the permits.

INTERRUPTION OF WORK.

ART. 63. Sec. 1. When through accident or force beyond his control the distiller has to interrupt the course of his work, he shall obtain a remission of duty in proportion to the number of days or periods during which the work of the distillery has been interrupted.

THE WORK CAN NOT BE RESUMED EXCEPT BY MEANS OF A NEW DECLARATION.

SEC. 2. In case of partial interruption of work, the minister of finances may grant the remission of duty for the vessels momentarily out of use during the days or periods remaining according to the declaration, if he satisfies himself that this interruption has been occasioned by causes independent of the will of the distiller.

SEC. 3. The distiller shall obtain the remission only if he makes at once the declaration of the interruption in writing to the receiver of excise of the jurisdiction; in case of accident or force beyond control, the facts shall be ascertained by the employees.

SEC. 4. In no case shall the duty be canceled for the day or period already begun.

3. *Various provisions.*

NEW PROCESSES AND APPARATUS.

ART. 64. The use of newly introduced vessels, utensils, or processes may be authorized by the minister of finances under conditions which he shall determine.

DISTILLATION AND OTHER INDUSTRIES PRACTICED IN THE SAME BUILDING OR INCLOSURE.

ART. 65. Sec. 1. It is forbidden to establish or put into operation a brewery and a distillery in the same building unless they are separated by a wall preventing all communication between them.

Sec. 2. A similar prohibition is established as regards ordinary distilleries and distilleries of seed fruits and stone fruits.

ART. 66. Sec. 1. In every inclosure where there exists a distillery it is forbidden, for the exercise of another industry, to put into fermentation substances suitable for producing alcohol.

Sec. 2. This prohibition does not apply to the ordinary fermentation of beer for drinking in breweries established under article 65.

COMMUNICATION OF DISTILLERIES WITH OTHER ESTABLISHMENTS.

ART. 67. No tubes, pipes, or conduits whatever shall exist, nor any communication otherwise than open-air communication, between a distillery and an establishment where there are kept substances suitable for the production of alcohol and which are not placed under the seals of the administration.

DUTIES OF DISTILLERS.

ART. 68. Sec. 1. At all times distillers are bound to furnish and provide for the employees of the administration the means of verifying

the liquids and material contained in the vats, boiler, stills, columns, generators, or any other vessel, receptacle, or apparatus of their shops.

Sec. 2. They are bound to open the discharging stopcock of their apparatus at every demand of the officials.

ART. 69. The distiller, when requested by the officials, shall, upon exhibition of an authorization of a functionary having at least a grade of comptroller, cause the collecting vats to be emptied for the inspection of their interior walls.

ART. 70. There shall not exist in the passage leading to the different shops of the works any object or material obstructing it or rendering it difficult or dangerous.

ART. 71. In case of dispute regarding the kind of material contained in a vessel not declared for that use, or which should be present illegally in the shops, the distiller is bound, upon the demand of the officials, to furnish to them two bottles of samples of at least one-half liter each of the said material.

THE RIGHT TO VISIT AND SUPERINTEND BY AGENTS OF THE ADMINISTRATION.

ART. 72. Sec. 1. The distilleries must always be accessible to the officials while work is going on therein, and somebody must be present there on the part of the interested party able to give the information necessary at the time of the visit.

Sec. 2. Except in the case provided for in article 73 below, the provisions of the preceding paragraph are applicable only during the preparation of material, beginning from the filling of the vats up to and including the cooling and during the work of distillation and rectification.

Sec. 3. At other times of activity the distiller is bound to give free access to his shop to the officials within the two minutes after they have rung the bell, or in the absence of the bell after they have rapped three times, every time with an interval of two minutes.

ART. 73. Section 1 of article 72 shall be always applicable during the time of activity in the distilleries where a deed of fraud having for its purpose and effect to withdraw from the excise the dutiable material shall have been ascertained by judicial condemnation.

ART. 74. The provisions of the preceding article shall be applicable to all the distilleries worked by any person or persons subjected to the judicial condemnation mentioned in the said article.

MODE OF ASCERTAINING THE QUANTITY, DENSITY, AND TEMPERATURE OF MATERIAL, AS WELL AS THEIR OUTPUT IN ALCOHOL.

ART. 75. Distillers are bound to accord to the agents of the administration the facilities necessary to ascertain the quantity, density, and temperature of the material contained in the different vessels of their shops, as well as their output in alcohol.

ART. 76. Sec. 1. The distiller who uses a distilling column and who declares more than 50 hectoliters of dutiable capacity per day or per working period shall place in the shop a testing still of 5 to 15 liters capacity, heated by steam by means of a *barboteur* and conformable to the model deposited in the department of finance.

Sec. 2. The testing still shall be set up conveniently in a place readily accessible to the agent charged with the superintendence of the shop, and in such way that the result of the record can not be falsified either by the introduction into that apparatus of condensing waters from the *pipes* which lead thither the vapors from the generator, or in any other

way. If necessary, the steam pipe shall be provided with a purifying apparatus to receive the water of condensation, and with a second stopcock placed near the still in order to enable the entrance of steam to be regulated.

Sec. 3. The distiller shall take care that this still is always in good condition and susceptible of being used at once; he moreover shall furnish the workmen necessary to do the work under control of the employees.

Sec. 4. In all distilleries the agent of the administration may ascertain the output in alcohol of one or more fermenting vats by means of the still, or the columns of the shop, or the testing still, or a special apparatus with which these agents may be provided.

Sec. 5. The authorization of the functionary having at least the degree of comptroller is always necessary for the agent to ascertain the output.

SECTION 3. PROVISIONS SPECIALLY APPLICABLE TO CERTAIN CATEGORIES OF DISTILLERS.

SIMULTANEOUS EMPLOYMENT OF MATERIAL OF DIFFERENT KINDS.

ART. 77. Sec. 1. There shall not exist between two distilleries where material of different kinds is used any communication other than by the public road.

Sec. 2. Neither shall there exist any tubes, pipes, or conduits whatever, nor any other communication than in the open air, between the rooms where material of different kinds is used or kept.

Sec. 3. Nevertheless, apparatus serving for the distillation of these materials, and which must be distinct, may be kept together in one shop, but on condition that there be no communication between them nor between the tubes intended to convey the materials.

ART. 78. Without prejudice to the eventual application of article 82, the provisions of articles 46, 67, and 77 shall not concern the distilleries where all the work is subject to the highest duty.

ART. 79. For the applications of articles 67, 77, and 82 the following are understood to be meant by kinds of either material, to wit:

(*a*) Unbolted flour derived solely from barley malt, rye, ordinary barley or oats not having undergone any preparation except grinding before being placed in for maceration, and potatoes.

(*b*) Other grain or seeds, such as rice, maize, millet, dari, wheat, etc., in grains or in unbolted flour; sprouted grain other than malted barley, cooked grain, or grain artificially dried.

(*c*) Bolted flour.

(*d*) Jerusalem artichoke, juice of Jerusalem artichoke, beets, juice of beets obtained by diffusion or methodical washing of fresh husks, beet juice obtained by pressing fresh roots, and every other kind of root or sugared juice.

(*e*) Dry fruit, molasses sirup, concentrated sugared juices, or sugars and sugared juices in mixture with one or several feculent or saccharine substances.

ART. 80. Distillers who use simultaneously distinct vessels for raw material giving rise to different kinds of duty shall conform to the following provisions:

(*a*) They shall make separate declarations of work comprising the dutiable vessels used in the preparation and distillation of each of the kinds of raw material.

(*b*) The registers and books mentioned in articles 40 and 41 shall be kept separately for each series of work.

(*c*) The putting into maceration as well as distillation shall take place

for every series in the order of the numbers given to the vats comprised in one and the same declaration.

ART. 81. The minister of finances may grant that the condition imposed by sections 4 to 6 of article 8 be not observed in distilleries where different kinds of raw material are used simultaneously in distinct vessels and apparatus.

ART. 82. It is forbidden to use simultaneously, or simply to keep together, several kinds of material in the distillery where the fraudulent use of a substance giving occasion to the application of one of the taxes incumbent on the substances mentioned under the letters *b* to *e* of article 79 shall have been ascertained by judicial condemnation.

ART. 83. The preceding article shall be applicable to all the distilleries mentioned in article 74.

WORK ON FECULENT SUBSTANCES IN FORTY-EIGHT HOURS.

ART. 84. The work in forty-eight hours with a series of vats shall be permitted in distilleries of feculent substances under the conditions enumerated in article 85.

ART. 85. Sec. 1. The distiller who desires to work in forty-eight hours shall conform to the following conditions:

1. The declaration of work prescribed by article 38 shall be made for an uninterrupted series of at least ten days, and for an even number of dutiable days, mentioning that the distiller desires to have entry made in the proportion of one renewal of substances for forty-eight hours.

2. It is forbidden to perform work of steeping, maceration, cooling, and distillation—

(*a*) During the night—that is to say, between the hours of 8 in the evening and 6 in the morning—or, if the distillation takes place by means of a still, between the hours of 8 in the evening and 5 in the morning.

(*b*) On the day after the day when these operations have taken place, or on the third day after, the maceration has been performed before a day of rest not subject to duty. In case of stoppage of work the vats shall be subjected to distillation on the day when the declaration expires.

3. It is forbidden to increase the density of the material contained in the macerating and fermenting vats.

4. The distiller shall keep the register prescribed by section 1 of article 40, whatever be the capacity of the vessels subjected to duty.

5. He shall keep, furthermore, a register on which he shall inscribe the density and temperature of the material at the three following periods: Immediately after putting into fermentation, twenty-six hours after the hour indicated for putting into maceration, and within the hour which precedes the beginning of distillation.

6. He must furnish a sieve, a tester, and other utensils (except the densimeter and thermometer) suitable to facilitate the operation of the agent of the administration.

Sec. 2. The provisions of article 42 shall be applicable to the register prescribed by No. 5 of the preceding section.

DISTILLATION OF JERUSALEM ARTICHOKE AND BEETS.

A. DISTILLATION OF JUICE OF JERUSALEM ARTICHOKE OR BEET JUICE WITHOUT TRANSFUSION.

ART. 86. The exemption from tax on the vessels mentioned under the letters *a* to *h*, and *j*, of No. 3 of article 11, shall be subordinate to the fulfillment of the following conditions:

(a) To prevent any beginning of fermentation in these vessels.

(*b*) To comprise them in the declaration to be made in conformity with article 38.

(*c*) To leave them entirely empty on Sundays and holidays, on which it has been declared that no work is to be performed. It is permitted, however, on the said days to keep in the macerating washtubs the unexhausted husk, as well as the juices, two weeks, to be put in fermentation, and prepare, beginning at 9 o'clock in the evening, the juice of Jerusalem artichoke or the beet juice necessary to resume the work on the following day. This authorization shall be also granted for the last day of every total interruption of work.

ART. 87. The washtub mentioned under letter *i* of No. 3 of article 11 shall be exempt from duty if its capacity does not exceed 4 per cent of the capacity of the smallest fermenting vats comprised in the declaration of work.

ART. 88. Sec. 1. In distilleries wherein juice of Jerusalem artichoke or beet juice, pure or mixed with other substances, the time granted for the filling of each vat shall be six hours at the maximum, to wit:

For three hours, if the capacity of the vat is less than 10 hectoliters.

For five hours, if the capacity is from 10 to 20 hectoliters.

For seven hours, if it is greater than 20 hectoliters.

Sec. 2. This time being passed, any increase of the density of the material contained in a vat shall be considered as a continuation of the filling.

Sec. 3. Beginning from the expiration of the same time, up to the moment when the distillation begins the vats shall not present an empty space greater than the space of one-tenth necessary for fermentation.

B. DISTILLATION OF JUICE OF JERUSALEM ARTICHOKE OR BEET JUICE WITH TRANSFUSION.

ART. 89. Independently of the provisions of the three preceding articles, articles 90 to 96 are specially applicable to the distillation of juice of Jerusalem artichoke or beet juice subjected to continuous fermentation with transfusion.

ART. 90. All the fermenting vats must have the same capacity; they shall not be dutiable except in the proportion of three-fourths of their gross capacity, and they shall not be charged beyond that limit.

ART. 91. It shall be nevertheless permitted to fill beyond three-fourths of the gross capacity the last of the vats inscribed in the register mentioned in section 1 of article 40, when the vat which follows it immediately in the order of numbers is filled up only to one-half of its gross capacity.

ART. 92. The times fixed by article 88 apply only to the filling of three-fourths of the gross capacity of the vats. Similarly, only the space of one-fourth, forming the part not dutiable, is considered as empty for the application of this article.

ART. 93. By a dispensation from article 49 the material may be transfused from one vat into that which follows it immediately in the order of numbers.

ART. 94. Every fermenting vat shall be provided at the limit of three-fourths of its gross capacity—

(*a*) With an overflow tube for transfusing into the vats which follow it immediately in the order of numbers the excess mentioned in article 91, as well as the new juice passing through the first of these vats to fill the second up to three-fourths of its gross capacity.

(*b*) With an overflow having at least a section of 30 square centimeters. This overflow, to which a stopcock or a plug is applied, shall not be closed except in *the case provided* by article 91.

ART. 95. It is forbidden to gather up material which might possibly flow out through the overflow.

ART. 96. At the time of the gauging by the employees the distiller shall cause to be placed against the internal walls of the vats two copper or iron bands indicating the limit of the dutiable three-fourths, and two other bands indicating the limit of half the gross capacities of these vessels. These bands, having a height of one-fifth to 1 centimeter, a length of 20 centimeters, and a thickness of half a centimeter, shall be placed for every limit horizontally, one opposite the other, in the direction of the center of the vat, and fixed to its walls by means of three riveted nails. They shall not be displaced without the distiller having made declaration thereof conformably to article 35.

C. DISTILLATION OF THE HUSKS OF BEETS.

ART. 97. The distillation of husks of beets is authorized under the conditions indicated in articles 98 to 106 hereinafter. The provisions of articles 86 to 88 shall also be applicable to this mode of distillation.

ART. 98. At the time of the gauging of the vessels of the shops by the employees the distiller shall cause to be placed at the interior of the fermenting vat two copper or iron bands, beginning from the bottom of these vessels, indicating the limit of the 5,800 hectoliters of their gross capacity.

The provisions of the second paragraph of article 96 shall be applicable to these bands.

ART. 99. The entry in the distiller's account shall be made at the ratio of 2,800 of the gross capacity of every fermenting vat.

ART. 100. The inscription of the maceration in the register mentioned in section 1 of article 40 shall take place at the moment when the beet husks are emptied into the fermenting vats.

The declaration of work prescribed by article 38 shall mention the use of beets and the method of distillation.

ART. 101. The order of numbers shall be followed for the charging as well as for the discharging of the vats. Nevertheless, when a sediment has been renewed the distiller may postpone the order of work of that vat to such times as he mentions in the register at the moment of inscription. The mention entered on the line which immediately follows the inscription of the vats indicates the new rank which it takes in the order of work.

ART. 102. The addition in the fermenting vats of molasses, sugars, flour, or other substance whatever suitable for increasing the density of the juice, and the existence of one or the other of these substances in the distillery or in its dependencies, are forbidden.

ART. 103. There shall not exist in the shop or its dependencies, or in the neighboring rooms occupied or not occupied by the distiller, any sugar root other than beet, nor any apparatus for the extraction of juice, such as graters, presses, washtubs, macerators, diffusers, or others. No preparation of material shall be begun, whatever be its destination, in which beets or other sugar roots enter as elements of manufacture.

ART. 104. The distilleries are forbidden to use the vessels enumerated under the letters *a* to *g* of No. 3 of article 11, as well as collecting vats, quick vats, or condensers.

The vessels mentioned under letter *h* of No. 3 of the same article shall not be exempted, aside from the conditions stipulated in article 86, from the duty, except under the reservation that the same vessel shall never contain simultaneously fermented husks and the liquid called *dregs*.

ART. 105. The distillation of the liquid called dregs may take place under exemption from excise four times per operating season, under the following conditions:

1. That it be declared on the second day before to the receiver of excise of the jurisdiction, in order that he may inform the employees.
2. That it be ended within the forty-eight hours which follow the end of the dutiable work.
3. That the root cutter shall be placed under seal.
4. That there shall not exist in the vat anything but the liquid called dregs, to the exclusion of beet husk; these vessels shall then be considered empty as regards the liability to tax.

ART. 106. No. 4 of the preceding article shall be applicable to the interruption of works provided in article 63.

D. PROVISIONS APPLICABLE TO A, B, AND C, PRECEDING.

ART. 107. When he deems it desirable, the minister shall establish in the shop a force of employees charged with ascertaining the quantity of alcohol manufactured. In that case the duty shall be calculated on the product obtained at the ratio of the rate of discharge mentioned in article 135 per hectoliter of alcohol at 50° at the temperature of 15° C. The distiller shall then place at the disposal of the employee a convenient room, heated and lighted at his cost, and furnished with a table, two chairs, and a closet closed with a key.

DISTILLATION OF MOLASSES.

A. CONDITIONS OF WORK.

ART. 108. The exemption from excise in favor of tuns, tanks, and vessels repeated under letters *a* and *b* of No. 4 of article 11 shall be subject to the condition that the molasses contained in these reservoirs indicates density higher than 20° Baumé at the temperature of 15° C., and that there shall not have been added thereto either flour or yeast.

ART. 109. The distiller shall indicate in his declaration of work whether the molasses which he intends to employ is homemade or foreign.

ART. 110. The distiller shall inform the agent of the administration accurately in regard to the quantity in weight of the molasses or sirup with which he charges his fermenting vats. He may, if he desires, work a mixture or alternately foreign and home-made molasses in his shop on the condition (1) of keeping these substances in distinct tanks, at a density of not less than 20° Baumé at the temperature of 15° C., up to the moment when they are diluted and heated previous to being poured into the fermenting vats; (2) that he shall indicate exactly to the employees in what proportion he employs each kind of the molasses or sirups. That indication shall be made by means of a special annotation made in the register prescribed by section 1 of article 40.

B. IMPORTATION UNDER EXEMPTION OF ENTRANCE DUTY OF SIRUPS AND MOLASSES INTENDED FOR DISTILLATION.

ART. 111. Importations of sirups and molasses intended for distillation shall not be effected except by a distiller generally known as such. They shall be taken out by virtue of a pass permit, valid for six months, delivered according to a declaration made conformably to the prescriptions of the customs tariff, and mentioning independently of the ordinary indications—

(*a*) The kind of sirup or molasses; that is to say, whether they are

derived from the manufacture or the refining of sugar, and whether they have a percentage of sugar more or less than 50 per cent.

(*b*) The location of the shops in which the sirup or molasses is to be distilled.

(*c*) The place where the methylation spoken of in article 117 is to be effected.

(*d*) The mode of transportation and the route to be followed from the first office of entry to the place of destination.

ART. 112. To facilitate the verification the importer shall add to his declaration a note indicating for every package its marks and number, as well as its gross and net weight. That note shall be attached to the pass permit by means of a seal of the administration.

ART. 113. After verification, the cars or boats serving for transportation shall be loaded and addressed, accompanied by a pass permit to the shop where the sirup and molasses are to be used.

ART. 114. The duplicate of the pass permit shall be transmitted to the receiver of excise in whose jurisdiction belongs the shop where the sirup and molasses are to be distilled. This responsible agent shall give notice without delay of receipt of this duplicate to the agent charged with the verification.

ART. 115. Immediately upon the arrival of the shipment at its destination the distiller shall give information thereof to the agent of the administration. The latter, having ascertained whether the leads fixed on the wagons or boats are intact, shall remove them, and assist at the unloading of the goods, which must be performed without interruption. The employees shall cause a certain number of packages to be weighed and verified, and their strength declared; they shall make sure, moreover, of the agreement of the marks and numbers with the indications of the note annexed to the pass permit. They shall record on that document the result of their operations. The necessary weighing instruments shall be furnished by the persons interested. The unloading of the wagons or boats being terminated, the sirup and molasses which have not yet been methylated shall be deposited in a storeroom or in an inclosure so arranged that no part can be taken out without the intervention of the agents of the administration. These storerooms or inclosures shall be closed by means of a warehouse padlock.

ART. 117. The sirup and molasses shall be methylated under the superintendence of the employees of the administration by means of at least 2 kilograms of sulphuric acid at 22° Baumé, diluted in 4 to 5 liters of water for every 100 kilograms of molasses or sirup. The employees who have been present at the methylation shall record on the pass permit that this operation has taken place in their presence by the intimate mixture of the dilute sulphuric acid with the sirup-like matter.

ART. 118. The methylation of the sirup or molasses shall be effected either at the office of importation, or at the issue from the warehouse, or at the shop of the declarer. If it is made at the shop it may take place all at once or gradually, as there may be call for it. The person interested shall inform the employees at least twenty-four hours in advance of the day on which he wishes to proceed to each operation.

ART. 119. The pass permit shall remain deposited with the distiller, who must exhibit it upon every demand of the employees until the sirup or molasses to which it relates has been used up entirely. The employees shall then cancel the cash permit by the statement that the entire portion comprised in the document has been distilled, and send it to the receiver of excise of the jurisdiction. This functionary shall send it to the bureau of delivery, after having canceled the duplicate, which he annexes to the account of the distiller's time credit.

DISTILLATION OF SEED FRUIT AND KERNEL FRUIT.

ART. 120. Sec. 1. The declaration of work to be performed by the distillers of seed fruit and stone fruit shall state—

1. The name, profession, and residence of the declarer.
2. The indication of the distillery by signboard and location.
3. The kind, amount, number, and capacity of the vessels which he intends to use for the maceration and fermentation of the material to be distilled.
4. The days on which he will put the fruit to macerate in each one of the vessels indicated in No. 3.
5. The number, amount, and capacity of each of the stills in which he intends to distill the macerated and fermented substances.
6. The days on which the distillation of the material will take place, the number of boilings to be made per day in each one of the stills, as well as the hour when the first boiling of the day will begin and the hour at which the last will end.
7. The amount, number, and capacity of each one of the stills in which he intends to rectify the product of distillation.
8. The days on which the rectification of low wine will take place, with the indication of the beginning and the end of rectification each day.

Sec. 2. This declaration shall only comprise vessels included in the protocol of gauging.

ART. 121. Sec. 1. The declaration is made in two parts, for each one of which a copy is delivered.

Sec. 2. The interval between putting in to macerate and distillation shall not exceed four months. The stills, heads, and worms shall remain under seal during that time.

Sec. 3. The first part of the declaration shall contain the indications of Nos. 1, 2, 3, and 4 of section 1 of article 120, and the second the indications of Nos. 1, 2, 5, 6, 7, and 8. Each one of these declarations shall be made at the bureau of the receiver of excise of the jurisdiction at latest on the day before the beginning of work.

ART. 122. All the work of maceration and distillation shall take place in the order of the numbers of the vats comprised in each declaration of work. The boilings shall not commence before 6 o'clock in the morning. They shall take place successively and without interruption.

ART. 123. The duration of the distillation shall be fixed according to the number of boilings, as follows, to wit:

WITHOUT QUICK VATS.

ART. 124. The duration of the distillation fixed in the preceding article shall be the maximum. The distillers may declare less time, although they can not take advantage thereof to distill beyond the hours declared.

ART. 125. The provisions of the following article and paragraphs, independently of the provisions mentioned in articles 16, 19, and 39, section 1, shall not be applicable to distillers of seed fruit and kernel fruit, to wit: Article 6, sections 1 and 2; articles 11, 12, 17, 18, 20 to 22, 38, 40, 43 to 46, 48, 50 to 61, and 62, section 3; articles 77 to 119, 126 to 128, and 132, Nos. 2 and 3; article 133, letters *b*, *c*, *d*, and *f*; articles 135 to 155, 158 to 160, and 161, section 1, Nos. 1, 2, 16, 18 to 22, 27, and 34, letters *b* to *d*, 35 and 36, sections 2 and 5, and article 168.

RECTIFIERS AND LIQUOR DEALERS.

ART. 126. Article 23, sections 1 and 2, letters *a* to *d*, *f*, and *h*, and section 3; articles 24, 30, 34, 35, and 36, sections 1 and 3; article 37; article 38, section 1; article 39, section 2; article 41, and article 68, section 2, shall be applicable to the rectifying distillers mentioned in article 17.

ART. 127. The declaration of work prescribed by section 1 of article 38 shall be sent by the rectifying distillers to the receiver of excise of the jurisdiction at latest on the day before the first operation of rectification. It shall state—

1. The indications called for in Nos. 1, 2, 3, and 5 of article 39.
2. The day on which they will begin their first rectification.
3. The number, numeration, and capacity of the stills, and the distilling columns and other vessels which they will use.
4. Their intention as to whether they will rectify low wines or alcohol.

ART. 128. Sec. 1. The obligations imposed on rectifying distillers by articles 126 and 127 above shall be applicable to liquor dealers who are spoken of in article 18.

Sec. 2. Nevertheless, the declarations of work to be made by liquor dealers may be valid for a period of six months.

CHAPTER III.

MINIMUM SHARE OF THE STATE IN THE PRODUCT OF THE IMPOST.

ART. 129. In the division between the state and the communal fund of the annual product of the excise duty on the manufacture of home brandies and the entrance duties on foreign brandies the share of the state is fixed at 25,175,000 francs at the minimum, except a deduction from this sum of the part of the state in the product of the entrance duties on vinegar and acetic acid and of the excise on vinegar of beer.

CHAPTER IV.

ACCOUNT OF CREDIT FOR THE PAYMENT OF THE EXCISE.

LIABILITY—DURATION OF TERMS OF CREDIT—SECURITY.

ART. 130. The declaration of work shall create the liability to duty.

ART. 131. Sec. 1. Distillers will obtain credit for the duty under sufficient security.

Sec. 2. The tax due for the declaration of every month shall be paid in three terms and by thirds from three months. These terms of credit shall run from the last day of the month during which the declaration of work expires.

ENTRY IN THE ACCOUNT OF CREDIT.

ART. 132. The account of credit on term of the distillers shall be debited with the tax resulting—

1. From the declaration of work.
2. From the additional amount ascertained at the settlement made at the expiration of these declarations, conformably to section 2 of article 13.
3 From the errors recognized at the time of verification of the register of maceration and distillation prescribed by section 1 of article 40.

AUDITING OF ACCOUNTS OF CREDIT.

ART. 133. The auditing of accounts of credit shall take place—

(*a*) By payment of terms when they become due.

(*b*) By the transfer of the tax, with delivery of the brandies, to the account of a wholesale dealer or a manufacturer of fine liquors or scented waters.

(*c*) By exportation abroad.

(*d*) By depositing the brandies in a public warehouse.

(*e*) By discharge for interruption of work.

(*f*) By discharge for rectification of errors recognized at the time of the verification of the register of maceration and distillation prescribed by section 1 of article 40.

ART. 134. Distillers of seed fruit and kernel fruit, and distillers who enjoy the deduction fixed in article 19, may cancel their account only by the method established under letters *a*, *e*, and *f* of the preceding article.

ART. 135. Sec. 1. The discharge of the tax shall be estimated, for the cases stated under letters *b*, *c*, and *d* of article 133, at 64 francs per hectoliter of drinkable brandy marking 50° of the Gay-Lussac alcoholometer at the temperature of 15° C., and the quantities below or above that strength proportionately.

Sec. 2. It shall be effected in the account on the term of credit next due.

ART. 136. Sec. 1. The discharge of tax for transfer or deposit in warehouse shall not be granted for quantities of brandy less than 10 hectoliters marking 50° of the Gay-Lussac alcoholometer and of 15° C. If the brandy marks a lower or higher degree of concentration the quantities thereof shall be increased or diminished in proportion to the difference.

Sec. 2. In case of exportation, the minimum shall be 5 hectoliters for brandies, which, however, for part of the provisions of vessels, may consist of smaller quantities and will always give rise to the discharge of tax.

CHAPTER V.

TRANSFER OF TAX.

ART. 137. Sec. 1. Wholesale dealers as well as manufacturers of fine liquors or of scented waters shall obtain, by means of sufficient security, credit for the duty which they shall have accepted in transfer and on the charge to comply with the obligations which were incumbent on the preceding debtor.

Sec. 2. The transfers shall be in the quantities fixed by section 1 of article 136 as regards wholesale dealers, and up to the amount of the quantities comprised in the act of concession mentioned in article 143 for the manufacturers of fine liquors or of scented waters.

ART. 138. Sec. 1. The account of credit mentioned in the preceding article shall be debited with the tax due on the quantities of brandies which the wholesale dealer and the manufacturers of fine liquors or of scented water shall have received from the distiller or other wholesale dealer enjoying credit in virtue of same article.

Sec. 2. The account shall be credited:

1. As regards wholesale dealers—

(*a*) By the payment of the term when due.

(*b*) By transfer of tax, with delivery of the brandies to another wholesale dealer or a manufacturer of fine liquors or of scented waters.

2. As regards manufacturers of fine liquors or scented waters—

(*a*) By exportation of the fine liquors or scented waters and for the quantities of alcohol admitted according to the proportions stipulated in article 142 hereafter.

(*b*) By payment of the terms when due.

CHAPTER VI.

EXPORTATION.

EXPORTATION OF BRANDIES WITH TOTAL DISCHARGE FROM EXCISE.

ART. 139. The exportation of homemade potable brandies with discharge of duty shall be allowed by sea, by land, or by river within the limits of the quantities fixed by section 2 of article 136 above, and by the bureaus to be designated by the Government.

ART. 140. The bitters and extract of absinthe are assimilated to brandies for the discharge on exportation.

ART. 141. The Government may subject to definitive liquidation of discharge of duty on exported brandy on the production of the receipts or of any other official documents delivered at the time of entrance into the adjoining country and establishing the conformity as regards the quantity and strength of the brandy between the declarations made in the two countries.

EXPORTATION OF FINE LIQUORS AND SCENTED WATERS WITH PARTIAL DISCHARGE OF EXCISE.

ART. 142. Sec. 1. There shall be granted, by way of remission of excise on the alcohol contained in the fine liquors and scented waters declared for exportation, a discharge calculated according to the amount of drawback on brandies, to wit:

(*a*) In the ratio of 60 per cent of the quantities of liquors.

(*b*) In the ratio of 70 per cent of the quantities of scented waters reduced to 50° of the Gay-Lussac alcoholometer at the temperature of 15° C.

Sec. 2. Fine liquors shall be considered to be those which contain at least 30 per cent of absolute alcohol, which are transparent and are sweetened with pure sugar. Scented waters shall not be mixed with volatile substances other than alcohol in a proportion greater than 5 per cent of their volume.

Sec. 3. This discharge is not granted in case the quantity exported is less than 50 liters, and it is subjected to the condition determined in articles 143 to 153 below.

ART. 143. Every manufacturer of fine liquors or of scented waters who wishes his product to be admitted to export with partial discharge of excise, must apply therefor every year to the director of contributions of the province, who delivers to him an act of concession for the quantity of alcoholic liquids in proportion to the importance of his manufacture. That application must be accompanied, as the case may require, by the act of concession which he has used the year before.

ART. 144. Sec. 1. At the time of each exportation of liquors or scented waters there shall be made a declaration giving rise to the delivery of the permits of exportation. That document shall be delivered, upon the exhibition of the act of concession, either in the name of the distiller who has furnished the alcohol, by the receiver of the bureau where the account of that distiller is opened, or in the name of the manufacturer

when the latter enjoys the favor of credit, on terms conformable to article 137 by the receiver of the district where the factory is situated.

Sec. 2. The permit shall be countersigned on departure from the factory of liquors or scented waters.

ART. 145. The receiver shall mention on the permit the date of the acts of concession and the name of the grantee, and he shall indicate on that act the number and the date of the permit as well as the quantities for which they have been successively delivered.

ART. 146. The account of the distillers or manufacturers of liquors or scented waters shall be credited with the excise accruing to the quantities of brandy at 50° of the Gay-Lussac alcoholometer at the temperature of 15° C., calculated according to the proportion indicated in section 1 of article 142.

ART. 147. Section 2 of article 135 shall not be applicable to discharges of accounts by exportation or transfer, or alcohols destined for the manufacture of fine liquors and scented waters.

ART. 148. The detailed verification shall take place at once at the following bureaus: Antwerp, Brussels, Gand, Liege, Ostend, Mons, and Tournay.

ART. 149. The manufacturers of liquors and scented waters shall deposit in the bureaus of verification samples of the different kinds or series of vials which they wish to use to export their products. These samples of vials must be provided with a label indicating their contents. At every shipment they shall annex to the permit a note mentioning, by package, the number and contents of each kind or series of vials, the quantity and degree of scented water, as well as the quantity which they represent in alcohol reduced to 50° of the Gay-Lussac alcoholometer, at the temperature of 15° C.

ART. 150. When the liquors or scented waters are presented at the custom-house in bottles, jars, or vials, it shall suffice in general, except in case of suspicion of fraud, to verify the quality and volume of a part representing 5 per cent of the shipment.

ART. 151. The existence of methylene, or any other alcoholic product not subject to excise, is forbidden in the manufactories of liquors and scented waters subject to the system of articles 142 to 153.

ART. 152. Articles 196 to 198 and 201 to 203 of the general law of August 26, 1822, as well as the provisions contained in article 23, sections 1 and 2, letters *a* to *d*, and in article 72, section 1, of the present law, are made applicable to the manufactories of liquors or scented waters spoken of in the preceding article.

ART. 153. The provisions in force relating to the exportation of home-made brandies with discharge from excise, and which are not contrary to those which precede, are made applicable to the exportation of fine liquors and scented waters.

CHAPTER VII.

DEPOSITS IN PUBLIC WAREHOUSE.

ART. 154. Sec. 1. The deposits of brandies in a public warehouse shall take place in the quantities given by section 1 of article 136 and in cancellation of the account of credit opened with the distillers. They may be made either in the name of the distiller or the dealer who accepts the transfer thereof.

Sec. 2. The duration of deposition in a public warehouse shall be unlimited.

Sec. 3. The tax shall be due on the quantities introduced.

ART. 155. Sec. 1. The taking out of brandies deposited in a public warehouse shall take place in the quantities fixed in article 136, unless it be the remainder of the entry.

Sec. 2. The warehouse accounts shall be canceled—

(*a*) By taking out under payment of excise in cash according to the rate of discharge granted at the moment when the brandies were put in store.

(*b*) By exportation under security for the tax and under the condition established in article 139.

(*c*) By transfer of the brandies in the warehouse to the name of another distiller.

CHAPTER VIII.

CIRCULATION AND DEPOSIT IN THE TERRITORY RESERVED FOR THE CUSTOMS DUTY.

ART. 156. Sec. 1. The transportation in the reserved territory of any quantity of brandy of half a liter or more must be covered by a pass.

Sec. 2. Under penalty of being void, these documents shall be visaed by the employees—

(*a*) At the place of departure and at the place of destination.

(*b*) At the bureaus or posts situated along the route to be traversed and indicated in the document.

(*c*) At the first bureau on the reserve territory when the expedition comes from the interior.

ART. 157. Sec. 1. The permit for circulating in the reserve territory shall be delivered only for brandies the possessor of which living in that territory is a holder thereof in either declarations of manufacture or of previous passes or permits of a date which does not go back more than six months.

The administration may prolong the time of validity of these occupants.

Sec. 2. The justification by the distiller for the storage of brandies within the radius of the customs, as well as for the delivery of the documents of circulation, shall be admitted only in proportion to the minimum output given below per hectoliter of capacity of the vessels declared for duty, to wit:

Brandies produced by the work.	Work in—	
	24 hours.	48 hours.
	Liters.	*Liters.*
(*a*) Unbolted flour produced solely from barley malt, rye, ordinary barley, or oats not having undergone any preparation before being put in to macerate except being ground when the total amount of feculent material put in to macerate does not exceed 20 hectoliters per 24 hours, or 40 hectoliters per 48 hours of work, or when no macerators are used	8	9
(*b*) Unbolted flour produced solely from barley malt, rye, ordinary barley, or oats not having undergone any preparation before being put in to macerate except grinding when the total amount of feculent material put in to macerate exceeds 20 hectoliters per 24 hours, or 40 hectoliters per 48 hours, of work, or when no macerators are used	15	19
(*c*) Potatoes[1]	7	8
(*d*) Grains or seeds other than barley malt, rye, ordinary barley, or oats not having undergone any preparation before being put in to macerate except grinding	17	20
(*e*) Bolted flour	18	21
(*f*) Jerusalem artichoke, juice of the Jerusalem artichoke in the natural state, beets, or juice of beets in the natural state	7	21
(*g*) Dry fruit, molasses sirup, concentrated juice of Jerusalem artichoke or beets, other concentrated sugared juices, or sugar and sugared juices mixed with one or more feculent or saccharine substances	18	21
(*h*) Seed fruit and kernel fruit	4	.....

[1] Brandy at 50° of the Gay-Lussac alcoholometer, at a temperature of 15° C.

Sec. 3. Nevertheless, if, in the course of experiment made by the employees, it is found that the output obtained by a distiller is greater than the number indicated above, the justification shall be admitted at the ratio of the means of the output ascertained by two experiments, which in that case shall be renewed in every operating season.

Sec. 4. When the brandies come from the interior, the permit of circulation in the reserved territory shall be levied without justification either at the bureau of the place of departure or at the last bureau of transit on this side of the lines of customs.

ART. 158. Sec. 1. The dealers established on the reserve territory shall obtain a duplicate of the documents serving for the entry in their account of credit on terms. They shall be subject to stock-taking, for the purpose of ascertaining at any time whether the quantities in store are duly justified.

Sec. 2. The delivery of the documents of circulation to the dealers resident within the radius of the customs, and who enjoy credit, shall take place up to the limit of quantity with which the account opened with them, and shall be charged in virtue of regular documents.

ART. 159. Sec. 1. The documents delivered for liquids dutiable according to their alcoholic strength shall serve to cover the deposits of liquors if they are provided with a receiver's certificate stating that the holder has declared to him that he wishes to convert into liquors the quantities which they mention.

Sec. 2. In no case shall the quantity of liquor be greater than that which would be represented by the alcoholic liquids reduced to 30° of the Gay-Lussac alcoholometer.

ART. 160. Sec. 1. The deposition of the brandies shall not be validly justified by documents indicating an alcoholic strength less than that of the quantities put in store.

Sec. 2. When the holder wishes to increase the degree of strength of the liquids in store by mixing with other spirituous liquors, he shall previously make declaration thereof to the receiver and shall proceed to the operation in the presence of the agent of the administration, who shall note the result thereof on the back of the document. The receiver shall withdraw the original document and deliver a new one, which shall state the quantities and the degree obtained by the mixture.

CHAPTER IX.

PENALTIES.

ART. 161. Sec. 1. The violators of the act mentioned below shall incur—

1. For an infringement of the prohibition contained in articles 13 and 14, a fine of 500 francs, independently of the penalties enacted below, in No. 31, for any illegal work of steeping or maceration of substances or of distillation or rectification.

2. For infringement of the conditions named in article 19, for the purpose of obtaining the deduction of 15 per cent there mentioned, a fine of 200 francs.

3. For one absence at the exit from the shop of the sign mentioned in article 24, if it is not affixed in forty-eight hours after first written notice given by the receiver of excise of the jurisdiction, as well as for the absence of a bell at the principal entrance of the establishment, a fine of 10 francs.

4. For the deposition of movable borders on the premises of a distiller, a fine of 20 francs per piece.

5. For the use of movable border and similar utensils, or any solid body having the effect of increasing the quantity of the steeping, macerating, or fermenting vats, a fine of 10 francs per hectoliter of the capacity of the vats thus enlarged.

6. For any contravention of article 29, a fine of 800 francs plus 200 francs per day of retardation, independently of the penalties that might be incurred for the use of secret vessels.

7. For having falsified or having tried to falsify by clandestine ways the result of a gauging, a fine of 100 francs.

8. For enlarging of vessels, if the counter verification provided in article 32 shows a capacity greater by 2 per cent or more than that which is stated in the protocol of gauging, a fine equal to five times the duty to be collected for the employment of these vessels during fifteen or thirty days, according as the work is performed in twenty-four or in forty-eight hours, besides the difference of duty beginning from the date of the last gauging.

9. For the nonproduction or the displacement of a dutiable vessel, a fine of 1 franc per hectoliter of its capacity.

10. For the use of a vessel not bearing the mark prescribed by article 34, a fine of 1 franc per hectoliter of its capacity.

11. For having without previous declaration dismantled, prepared, or otherwise changed the capacity of the vessels entered in the protocol of gauging, or for having substituted for the gauged vats others of larger dimensions, a fine equal to that in No. 8.

12. For deposition without declaration of a still, a head, a worm, or a distilling column, a fine of 100 francs.

13. For the clandestine deposition of a distilling apparatus not in activity, a fine of 200 francs, with confiscation of all utensils.

14. For any sale, lease, or loan of utensils without declaration, a fine of 25 francs, to be levied on the seller, leasor, or lender.

15. For breaking or altering the seal affixed on the utensils of a distillery, for the nonproduction of one of the sealed pieces, a fine of 100 to 200 francs.

16. For the anticipation or prolongation from one to twelve hours of work declared, a fine equal to the tax which would be due for the work of two or more days according as the work is done in twenty-four or forty-eight hours. Any anticipation or prolongation exceeding that number of hours shall be assimilated to the work of maceration or distillation without declaration, provided by No. 31, letter *a*, of the present article.

17. For the nonpresentation of the copy of the declaration of work, a fine of 25 francs.

18. For not having announced the cessation of work before the expiration of the declaration, the payment of a sum of 25 francs, the cost of a notice in writing which will be addressed by the receiver to the distiller. Furthermore, the latter will be considered as continuing their work; and in that case they will be entered on the footing of their preceding declaration for a series of fifteen or thirty days, according as the work is done in twenty-four or forty-eight hours.

If it is ascertained that the work is not conformable to the preceding declaration, they shall incur a fine equal to five times the tax which would be due for a supposed work of fifteen or thirty days, according as the work is done in twenty-four or forty-eight hours.

19. For the failure to produce immediately in the shop, or for the alteration of, the register prescribed by section 1 of article 40, a fine of 250 to 1,000 francs.

[illegible]r any omission of an inscription at the desired moment on the

register prescribed by section 1 of article 40, and for any inexact, effaced, or altered inscription the change of which has not been duly approved—

(*a*) When there is question of putting into maceration, a fine equal to ten times the tax due, by reason of a renewal made in the vessels thus irregularly used.

(*b*) When there is question of putting into distillation, a fine equal to five times the excise, calculated at the ratio of a renewal of material made in the dutiable vessels comprised in the declaration of profession.

21. For every declared maceration which is anticipated or delayed more than one hour, a fine equal to that indicated under letter *a* of the preceding number.

22. For not beginning the distillation at the hour inscribed in the register mentioned in section 1 of article 40, a fine equal to that indicated under letter *b* of No. 20.

23. For the nonpresentation or the alteration of the book prescribed by article 41, a fine of 100 francs.

24. For every maceration performed in contravention of articles 48 and 122, a fine equal to that indicated under letter *a* of No. 20, above. This fine shall be calculated according to the contents of the vats which are not regularly put into maceration.

25. For any transfusion effected in contravention of article 49, a fine equal to that indicated under letter *a* of No. 20, cited above.

26. For every distillation performed in contravention of articles 69 and 122, or which is anticipated or delayed by more than one hour, contrary to the provisions of article 60, a fine equal to that indicated under letter *b* of No. 20.

27. For the nonexistence of the empty space and for the refusal to open the discharge stopcock of the still in the cases provided by sections 1, 3, and 4 of article 61, a fine of 20 francs per hectoliter of the capacity illegally used.

28. For an infringement of the provisions of article 65, a fine of 200 francs and the refusal to admit any declaration of work until the communication existing between the two shops is intercepted.

29. For any anticipation or prolongation of the works declared in the distillery of seed fruit or kernel fruit, a fine of 20 francs per hectoliter of the capacity of the vessel the use of which has been anticipated or prolonged.

30. For the refusal to allow an inspection to be made, a fine thus graduated:

When the shop contains a capacity of less than 20 hectoliters in dutiable vessels, a fine of 100 francs.

For 20 to 50 hectoliters, 200 francs.

For 50 to 100 hectoliters, 100 francs.

For more than 100 hectoliters, 500 francs.

The inspection shall be deemed to have been refused, among other things—

(*a*) When the distillery refuses to comply with the demand made by the officials, in pursuance of articles 32 and 69, to allow them to proceed to the counter verification, by filling the dutiable vessels, or to cause the collecting vats to be emptied.

(*b*) When the distiller of seed fruit or kernel fruit refuses to open the discharge stopcocks of the still during the time declared for the rectification.

31. (*a*) For any work of steeping, maceration, fermentation, distillation, or rectification without declaration;

(*b*) For any deposition of steeped, macerated, fermented, or ferment-

ing material elsewhere than in the vessels designated for that use in the copy of the declaration;

(*c*) For the introduction of this material outside of the shop.

(*d*) For the clandestine existence in a distillery or its dependencies of vats, boilers, or other vessels whatever, suitable for the preparation or distillation of material;

(*e*) For any clandestine deposition, in any place whatever, of a distilling apparatus bearing traces of recent work;

(*f*) Finally, for an act of fraud having for its purpose to withdraw the dutiable substance for impost;

A fine equal to five times the tax which would be due for a supposed work of fifteen or thirty days, according as the work is done in twenty-four or in forty-eight hours in the vessels declared and not declared, including the capacity of those which are not dutiable, but the use of which is subject to declaration.

Independently of the confiscation of utensils and imprisonment of from one to two years, the fine will be double when the act occurs in a clandestine factory, or in the case of legally established shops elsewhere than in the room wherein are found collected the vessels comprised in the declaration of work.

If the act of fraud takes place in a distillery of feculent substances where the work is done in forty-eight hours, the distiller may, besides the penalties incurred, be deprived, during one year at least, of the right of working under that system.

32. For having refused to employees of the Government, while they performed the inspection of the stock, access to one or the other of the parts or dependencies thereof, a fine equal to that indicated in No. 31.

33. The same fine for a refusal to the employees furnished with special authorization from a functionary having at least the grade of comptroller to cause or allow one or other of the apparatuses or utensils to be dismantled, the use or destination of which is not justified.

34. For any other contravention against the measures taken in execution of articles 64 and 171 of the present law, a fine equal to five times the excise calculated at the ratio of a renewal of material effected in the dutiable vessels included in the declaration of profession.

This penalty is also incurred—

(*a*) For all contraventions against the measures taken in accordance with articles 23, section 2, letter *c;* 27, 28, 33, 39, section 1, No. 12; 43, 44, 46, 50 to 57, 66 to 68, 70 to 80, 82, 83, and 85 to 107, inclusive.

(*b*) When in the distillation of the husks of beets, the employees, after trying to take out the husks from one vat, find that the level of the liquid called dregs is below the limit of fifty-eight one-hundredths of the capacity of that vessel.

(*c*) When the distiller does not comply with the demand of the employees to take out the whole of husks of beets from a vat in discharge, or when he increases the quantity of liquid contained in the vat.

(*d*) When, at any period whatever of manufacture, the liquid contained in the vats used for the fermentation of husks is marked 2.03° or more of the densimeter and the temperature of 15° C.

35. For any withdrawal of liquids, either in the warehouses or on exportation with discharge of duty, a fine of five times the duty on the deficiency at the charge of the bonder or shipper.

36. For any contravention of the provisions of articles 142 to 153, relating to exportation with partial discharge of excise of fine liquors and scented waters, a fine of 500 to 2,000 francs, independently of the withdrawal of the concession.

Sec. 2. The penalty incurred by rectifying distillers and by liquor dealers for a contravention of section 2 of article 68, shall consist in a fine of 100 francs.

In the case indicated under Nos. 11, 16, and 18 of section 1 above, the penalties shall consist in a fine of 200 francs. This latter fine shall also be applied to them in case of rectification without declaration.

Sec. 3. In every one of the cases provided for in Nos. 19, 20, 21, 23, and 25 the duty acquired for the treasury, according to the declaration, shall be double.

Sec. 4. When the act of fraud is waived, the administration may refrain from requiring the payment of double duty in case of contravention of Nos. 20, 21, and 25.

Sec. 5. The illicit cooling of material shall be considered as an act of fraud and punished conformably to No. 31.

ART. 162. Sec. 1. Distillers, rectifiers, and liquor dealers shall be responsible for the contravention committed in their shops.

Sec. 2. Proprietors or tenants shall be responsible for the contravention discovered in the buildings occupied by them, unless they prove that they could not prevent the act which gives rise to responsibility.

ART. 163. The administration shall not compromise on the penalties incurred for contravention of the present law, when the act occurs in a clandestine factory.

ART. 164. If a distiller works without having paid or given security for the duty, or if he is bound to be in contravention for an act falling under the application of No. 31 of article 161, the administration may, if it deems it necessary for the security of the payment of tax due and fines incurred, seize and cause to be taken away all the utensils and vessels of the shop in virtue of an ordinance of the president of the tribunal.

ART. 165. Article 505 of the penal code shall be applicable to every distiller, rectifier, liquor dealer, or merchant who shall have concealed low wines or brandies derived from clandestine manufacture.

ART. 166. The second paragraph of article 20 of the law of April 6, 1843, relating to the arrest of defrauders in matters of tariff shall be applicable to the perpetrators of the frauds committed in their clandestine distilleries and entailing the penalty of imprisonment.

ART. 167. The persons named in article 231 of the general law of August 26, 1822, who have incurred the penalties threatened by article 252 of the penal code shall be furthermore liable to a fine of 10,000 francs, to the profit of the treasury.

In case of relapse the fine shall be doubled.

The provisions of articles 229 and 231, section 1 of the general law cited above, shall be applicable, as the case may be, to the fine threatened by the present article.

ART. 168. Without prejudice to the penalties incurred for contravention of the laws in force, every infringement of the provisions of articles 111 to 119 regarding the importation of sirups and molasses intended for distillation shall be reported to the administration, which shall prescribe the measures it shall deem necessary to prevent the return thereof.

CHAPTER X.

GENERAL PROVISIONS.

ART. 169. The provisions of the general law of August 26, 1822 (Official Journal No. 38), those of the law of March 4, 1846, on warehouses, and of the law of August 6, 1849, on transit, modified by the laws of

March 3, 1851, and May 1, 1858, shall be applicable to distillers, to rectifiers, to liquor dealers, and to wholesale dealers, so far as they are not modified by the present law.

ART. 170. Distillers, rectifiers, liquor dealers, and merchants shall aid the employees of the government in the exercise of their functions, and for this purpose they must furnish each one, so far as he is concerned, the means of effecting the visits, verifications, and gauging—in default of which a protocol of refusal of inspection will be drawn up.

ART. 171. The Government is authorized to take further measures to assure the collection of duties on the manufacture of brandies. These decrees are submitted to the legislative chamber before the end of the session, if they are assembled; if not, in the following session.

ART. 172. The following are abrogated: The law of June 27, 1842, modified by the laws of March 5, 1850, December 20, 1851, and June 9, 1853; the laws of January 5, 1844 (brandies); the budget law of December 20, 1868, article 3, sections 1 and 2; the law of May 15, 1870, article 9, sections 2 and 10; the law of August 15, 1873; the budgetary law of December 19, 1874, article 2; the law of July 30, 1883; the law of September 16, 1884, and the law of December 20, 1886.

ART. 173. The present law shall be obligatory beginning from the day after its publication.

Let us promulgate the present law. Let us order that it be invested with the seal of the state and published by means of the Moniteur.

LÉOPOLD.

For the King: A. BEERNAERT,
The Minister of Finances.

SUMMARY TABLE OF THE LAW ON BRANDIES.

Chapter I.
- Foreign brandies.
  - Basis and percentage of duties.

Chapter II.
- Homemade brandies.
  - Section 1. Basis and percentage of excise—Exemptions and reductions.
    1. Dutiable vessels.
    2. Percentage of excise.
    3. Vessels exempt from duty.
    4. Exemption from excise for Sundays and holidays.
    5. Exemption from excise in favor of rectifying distillers and liquor dealers.
    6. Deduction of duty granted to agricultural distillers.
  - Section 2. Provisions applicable to distillers in general.
    1. Establishment of distilleries.
       - Declaration of possession.
       - Bell and signboard.
       - Utensils, pipes, pumps, etc.
       - Gauging and numbering of vessels.
       - Changes and repairs of utensils.
       - Distilleries in nonactivity—Sale, lease, loan, etc., of utensils or apparatus.
    2. Work of manufacture.
       - Declaration of work.
       - Register of declaration of maceration and distillation of material, and books showing the situation of work.
       - Simultaneous existence and use of different kinds of raw material.
       - Work of steeping, maceration, and fermentation.
       - Work in apparatus serving to cook, grind, or crush the material and to dilute the malt before maceration.
       - Work in the macerators.

Chapter II—Continued.
Homemade brandies—Continued.
Section 2.—Provisions applicable to distillers in general—Continued.
2. Work of manufacture—Continued.
Cooling of the material—
A. Before the introduction of the material in the fermenting vat.
B. After the introduction of the material in the fermenting vat.
Yeast basins.
Work of distillation.
Rectification of deteriorated brandies.
Interruption of work.
3. Various provisions.
New processes and apparatus.
Distillation and other industries carried on in the same building or inclosure.
Communication of distilleries with other establishments.
Duties of distillers.
Right to visit and superintend possessed by agents of the administration.
Ascertaining the quantity, density, and temperature of the material as well as of their output in alcohol.
Section 3. Provisions specially applicable to certain categories of distillers.
Simultaneous use of materials of different kinds.
Work on feculent material in forty-eight hours.
Distillation of Jerusalem artichoke and beets.
(*a*) Distillation of juice of Jerusalem artichoke or beet juice without transfusion.
(*b*) Distillation of juice of Jerusalem artichoke or beet juice with transfusion.
(*c*) Distillation of beet husks.
(*d*) Provisions applicable to A, B, and C preceding.
Distillation of molasses.
(*a*) Conditions of work.
(*b*) Importation under exemption from entrance duty of sirup and molasses intended for distillation.
Distillation of seed fruit and kernel fruit.
Rectifiers and liquor dealers.
Chapter III.
Minimum of the share of the state in the product of the impost.
Chapter IV.
Account of credit for the payment of the excise.
Liability—Duration of the terms of credit—Security.
Entry in the accounts of credit.
Cancelling of accounts of credit.
Chapter V.
Transfer of duties.
Chapter VI.
Exportation.
Exportation of brandies with total discharge from excise.
Exportation of fine liquors and scented waters with partial discharge from excise.
Chapter VII.
Deposition in a public warehouse.
Chapter VIII.
Circulation and deposition in the territory reserved for customs duty.
Chapter IX.
Penalties.
Chapter X.
General provisions.

FRANCE.

LAWS RELATING TO THE TAX ON DISTILLED SPIRITS.

No. 236.] EMBASSY OF THE UNITED STATES,
Paris, December 15, 1894.

Hon. WALTER Q. GRESHAM,
Secretary of State.

SIR: Referring to your No. 295, of October 12, asking, at the instance of the chairman of the Committee on Finance of the Senate, for complete copies of the laws and regulations of the Government of France with regard to the use of methylated and unmethylated alcohol, I send herewith:

1. A copy of a note received from the minister of finance, with a translation of the same.
2. Printed copies of the laws and regulations concerning the matter, which have been kindly furnished by the minister of finance.

I have, etc.,

J. B. EUSTIS.

[Translation of inclosure 1.]

Commercial methylated and unmethylated alcohol which does not contain any spirits of wine (alcohol vinique) is not subject to any internal fiscal regulations. The first of these products falls under such regulations only when it is used as an agent in changing alcohols allowed to benefit by the reduced rates under the laws of August 2, 1872.

The name of unmethylated alcohol is frequently given to the residuum of the rectification of essential oils, which is a mixture in varying proportions of spirits of wine and of propylic, catylic, and unmethylated alcohols. The rule applied in France to these low products is fixed by article 31 of the decree of September 18, 1873, and by circular No. 275, annexed hereto, of September 22, 1879 (pp. 28–32; par. 94–105, p. 53).

GENERAL DIRECTION RELATING TO INDIRECT TAXES.

METHYLATED ALCOHOLS.

Publication of the decisions rendered by the advisory committee of arts and industries, of June 13 and July 25, 1894—New methods of methylation of alcohols intended for use in the manufacture and clarifying of varnishes—Modifications applied in the analytical processes A and E.

In the sessions of June 13 and July 25, 1894, the advisory committee of arts and industries passed several resolutions concerning the treatment of methylated spirits, which, having been sanctioned by the competent ministers on the following 4th of September, are now in force. Therefore I publish them for use, and invite the directors to immediately bring them to the knowledge of methylators, manufacturers, and depositors of methylene.

SESSION OF JUNE 13, 1894.

Among other methods instituted to prevent frauds that have been discovered in regard to methylated alcohols, the advisory committee, by decision of March 1, 1893, has modified the processes then authorized for the methylation of alcohols admitted for circulation. For the two modes in force it has substituted one uniform[1] method, making it lawful to add to the regular mixture of alcohol and methylene a quantity of benzine and green malachite.

The latter requirement has given rise to a certain number of reclamations emanating from three different groups of tradesmen. In the session of June 13, the advisory committee in regard to these reclamations passed the resolutions briefly stated below:

HATTERS, MANUFACTURERS OF PHARMACEUTIC PRODUCTS, ALKALOIDS, TANNIN, DYES, FULMINATE OF MERCURY, ETC.

The complaints made by hatters, manufacturers of pharmaceutic products, alkaloids, tannin, dyes (colors), fulminate of mercury, etc., are due to an erroneous interpretation of the decision of March 1, 1893. The latter had in view merely methylated alcohols intended for sale. It does not concern the mixtures of alcohol and methylene which the tradesmen in question, by virtue of former special decisions in 1881, are authorized to prepare for use on the spot. Those interested, therefore, have not to add to those mixtures benzine or green malachite, which would form for them an obstacle to the use of methylated alcohol. The sole modification introduced in the mode of methylation conceded to them consists in the substitution of 15 liters of regular methylene added to 100 liters of alcohol in the proportions previously fixed.

These special methylations, the committee suggests, are subordinate to the express condition that they must take place in the very factories where the alcohol is to be used.

MANUFACTURERS OF VARNISHES.

The manufacturers of varnishes have proven the necessity of useing alcohols containing neither benzine nor green malachite in the manufacturing and cutting of varnishes of very different compositions, as well as in the preparations of colors for varnishes. Consequently their protest has been granted. Nevertheless, these tradesmen will be able to methylate the alcohol, following one of the two modes described below, with the exclusion of every other method according to the destination of the spirits, either to be transformed into finished products on the spot—varnishes and colors for varnishes—or to be sold as semivarnishes or as alcohols for polishing.

PROCESS OF METHYLATION FOR ALCOHOLS DESTINED TO BE TRANSFORMED INTO VARNISHES OR INTO COLORS FOR VARNISHES IN THE ESTABLISHMENTS THEMSELVES WHERE THEY ARE METHYLATED.

Mix, in the presence of the official, 15 liters of methylene of the authorized quality with 100 liters of alcohol of a strength equal to or above 90°.

The alcohol thus methylated shall not leave the factory except as a finished industrial and mercantile product (varnish or color for varnish).

---

[1] *For the* description of this method of methylation see the circular No. 61 June 25, *1893.*

PROCESS OF METHYLATION FOR ALCOHOLS SOLD AS CLEANING ALCOHOLS, OR TO SMALL TRADESMEN WHO WISH TO PREPARE VARNISHES.

Add, under the supervision of the officials, 4 kilograms at least of resin or gum resin to 100 liters alcohol of a strength equal to or above 90°, which have previously been mixed with 15 liters of authorized methylene.

MANUFACTURE OF FLOWERS, PLUMES, AND DYEING AND CLEANSING MATERIALS.

The application of the new method of methylation to alcohols prevents the use of alcohol in the manufacture of flowers, plumes, and dyeing and cleansing materials. Through the syndicate chambers these industries have represented that they can not use green-colored alcohols (colored by green malachite) for the dyeing of flowers, plumes, and celluloid in bright colors as well as for cleansing white stuffs. Consequently they have demanded authority to receive, as in the past, simple mixtures of alcohol and methylene. It would have been possible to give them satisfaction only by renouncing the principle which has been adopted in the interest of the revenue and which consists precisely in forbidding to put in circulation merely methylated alcohols. Under these conditions the advisory committee has expressed the view that it was in place to forego any decision relative to the reclamations formulated by the representatives of the industries in question; but at the same time it has declared that the methylated alcohol, from the time of its arrival in the establishment where it is to be utilized, can be subjected to all the modifications which the tradesman will justify as being indispensable for his especial fabrication. One will be able, consequently, by means of an appropriate reagent, to destroy the coloring matter, which otherwise is not exacted when the methylation is done on the premises where the alcohol is employed.

This later decision confirms the instructions which have been given on this point on the 29th of last December by the lithographed letter No. 34471.

SESSION OF JULY 25, 1894.

MODIFICATIONS APPLIED TO THE ANALYTIC PROCESSES A AND E.

The processes which have been adopted by the advisory committee, in consequence of the decision of March 1, 1893, for the analysis of sampled substances, have furnished satisfactory results, save the qualitative assay relative to the ascertainment of the quantity of ingredients in the alcohols (circular No. 61, of June 25, 1893, Supplement A) and for the ascertainment of the quantity of methylic impurities in the methylenes (same circular, Supplement E).

After the examination of the question, that wise body, in its session of the 25th of July last, has declared that the qualitative assay concerning the ascertainment of the quantity of essential oils in the alcohols needs nothing but to be simplified by striking out the two first lines of Supplement A. This document, therefore, will commence with the words, "Place into an assay tube."

As regards the difficulties met in the ascertainment of the quantity of methylic impurities, they consist therein that the commercial bisulphites of soda, though having the regulation density, can differ from each other by the yield in free sulphuric gas, soluble in employed chloroform, and thereby more or less augmenting the volume. To remedy this,

the committee has prescribed that the commercial bisulphites should undergo certain corrections, in order that they indicate exactly zero in presence of a mixture composed of 75 parts of pure methylic alcohol and of 25 parts of pure acetone, the whole titrating 90 alcoholmetric degrees, and the whole operation performed with a determined quantity of distilled water.

These corrections, it is added, are conducive of a greater concordance in the results of the analyses; they permit, besides that, to lower from 5 per cent to 2.5 per cent the minimum rate of the pyroligneous impurities requisite in the methylene type.

NEW DEFINITION OF THE METHYLENE TYPE.

The advisary committee has, in consequence thereof, given a precise definition of the methylene type, in the following manner:

The methylenes presented to the administration for employment in the methylation of alcohols shall mark 90 alcoholmetric degrees, this determination having been made at the temperature of 15° without correction. They shall contain 25 per cent of acetone, with an allowance of 0.5 per cent (five thousandths), more or less, and 2.5 per cent (twenty-five thousandths) in the minimum (deduction made of products saponifiable by soda and expressed in acetate of methyl) of pyroligneous impurities which communicate to them a vivid smell and characteristic of crude productions of the wood distillation, the complement up to 100 volumes being formed by water and methylic alcohol free from every combination. Every addition of products foreign to the wood distillation would, in full right, be attended by the rejection of the methylene.

This new definition shall be substituted for that which forms the object of section 2, page 8, of the circular No. 61, cited above.

Elsewhere, in order to prevent every confusion and to facilitate the researches, I have had printed, as supplements, following the present circular—

1. The analytic processes A, B, C, D, E, modified, in so far as it concerns the processes A and E, in conformity with the decision of the committee cited above. These pieces will replace those that are joined to the circular No. 61.

2. The definition of wine alcohol admissible for methylation, such as has been given by the advisory committee in its session of March 1, 1893. This definition has not undergone any modification.

3. The definition of methylene; type administration precisely stated above.

4. Finally, an abstract of the different processes of methylation of alcohols employed in the principal industries admitted to the benefit of the reduced tax, put in harmony with the decisions rendered by the committee of arts and manufactures in its sessions of March 1, 1893, and of June 13, 1894.

GENERAL DISPOSITIONS.

ALCOHOLS DESTINED TO BE PUT INTO CIRCULATION.

As a principle, the alcohols admitted to the benefit of the tax of methylation shall be transformed on the premises themselves where they have been methylated into finished products, industrial and mercantile. There are only excepted the spirits destined for sale after methylation, be it for uses of combustion or be it for clarifying or for the finishing of varnishes. But in the former case the methylation shall be completed thereon by the addition of benzine and green malachite, and in the latter case by that of resin or gum resin.

When, therefore, the officials prove the carrying away of or they meet *in the course* of transportation products over the character of which *they have grave* doubts, they shall declare provisional verbal process and

take samples in advance. Only after the publication of the results of the analysis they will follow up the verbal process or not, as the case may be.

RATE OF DELIVERIES, PER DIEM AND PER CONSIGNEE, TO PERSONS WHO ARE NOT DEPOSITORS.

The circular No. 61 of June 25, 1893, section 36, has fixed at 100 liters the rate of deliveries of simple mixtures of alcohol and of methylating substances which the methylators are allowed to make per diem to persons who are not depositors. This disposition, which has been made by title of assay, is maintained till a new order be issued. It is applicable to alcohols to be sold after methylation, according to the new formula for the clarifying and finishing of varnishes. (Methylated spirits to which has been added at least 4 kilograms per hundred of resin or gum resin.)

REGISTERS OF MANUFACTURE AND OF SALE.

I have seized this occasion to recommend to the officials to keep with the greatest care and in the conditions indicated by the circular No. 314 of the 30th of April, 1881, the registers of fabrication and of sale, the object of which is precisely stated by the reglementary decree of January 29 preceding, articles 5 and 6.

PREVIOUS ANALYSIS OF ALCOHOLS TO BE METHYLATED AND OF THE METHYLATING SUBSTANCES.

By the terms of the decision of the advisory committee, bearing date March 1, 1893, proofs shall be taken in advance of each operation of methylation, whatever the amount may be, concerning the alcohol in its natural state, the methylating substances, and the alcohol methylated.

The control which previous to that decision preceded the methylation has thus been reported in the very moment of the operations. The same has been explained by the circular No. 61 cited above, sections 20 and 21. On the other hand, the benefit of moderation of tax is suspended until the methylation, after the publication of the results of the analysis of the sampled substances, shall have been recognized as regular.

Further, whatever may be the celerity attained by the laboratories, there always elapses a time of more or less duration during which the tradesmen can not dispose of their products without engaging their responsibility, for if they can be certain of having mixed the alcohol and the methylating substances in the proper proportions, they can not be sure of the quality of these materials, which they have not always manufactured themselves. This consideration has led the administration to accord to the methylators who demand it the privilege of having analyzed the alcohol and the methylating substances previous to their mixture.

This decision has been made subordinate to the following conditions, which have been published by the lithographic letter No. 34471 of the 29th of December, 1893:

* * * After the previous sampling of these different materials, the alcohol and the methylating substances shall be inclosed in a room duly agreed to by the chief of the administrative division and be fastened by two locks, the one of which shall be furnished by the administration.[1]

[1] By locks furnished by the administration are understood padlocks special for the service of methylated alcohols, the adoption of which has been published by the circular No. 337 of the 23d of June, 1882, and which shall be demanded under the seal of the third *division, third office.*

It is scarcely necessary for me to add that these conditions are rigid. When the sampled products have been accepted, the officials, after each methylation, will have nothing more to do but to make the fourth regulation previous sampling of the total volume of the mixture. The mixture shall be made absolutely homogeneous by sufficient agitation (circular No. 61, sec. 28, last par.). The official shall take care to enter upon the formula 20 E the number of each bulletin of analysis relating to samples of alcohol unmethylated, of methylene, and of benzine previously analyzed.

If the analysis of this fourth sampling should reveal an irregularity of such nature as to invalidate the operation, this irregularity as a principle could only be attributed to fraudulent maneuvers.

A. CATUSSE,
The States Counsellor, General Director.

An official copy.

DECHAUD,
The Administrator of the Second Division.

SUPPLEMENT.

I. Analytic processes A, B, C, D, and E.
II. Type of wine alcohol admissible for methylation.
III. Type of methylene the administration is to admit as methylating substance.
IV. Abstract of the different processes of methylation of alcohols employed in the principal industries admitted to the benefit of the reduced tax, put into harmony with the decisions rendered by the advisory committee of arts and manufactures in its sessions of March 1, 1893, and of June 13, 1894.

I.

ANALYTIC PROCESSES.

ANALYTIC PROCESSES A.

DOSAGE (ASCERTAINMENT OF THE QUANTITY) OF THE ESSENTIAL OILS IN ALCOHOLS.

QUALITATIVE ASSAY.

Place in an assay tube 5 cubic centimeters of alcohol, and add thereto 30 to 35 cubic centimeters of brine, colored by a little violet blue of aniline.

A. No oily coating is floating on top.

B. A quantity, more or less important, of superior alcohols, violet-tinctured, is floating on the surface of the liquid.

A. No oily layer is floating on top of the brine.

First. Take 100 cubic centimeters of alcohol, introduce it into a decantation funnel of 1 liter, add 60 to 70 cubic centimeters of carbonic bisulphite, and then add 450 centimeters of saturated brine and a quantity of water sufficient to redissolve the salt which precipitates (about 50 cubic centimeters).

Second. Stir the funnel vigorously, then let it settle.

Third. Pour about 300 cubic centimeters carbonic bisulphite into the funnel (provided with a stopcock), avoiding the introduction of water.

Fourth. Make two other similar complete extractions, and reunite the carbonic bisulphite to that coming forth from the first assay.

Fifth. Then stir the carbonic bisulphite with a quantity of concentrated sulphuric acid sufficient to make the latter fall to the bottom of the funnel after the stirring (2 to 3 cubic centimeters in general are sufficient).

Sixth. Let it settle well, then pour the acid into a vial of 125 cubic centimeters; wash the carbonic bisulphite twice with 1 cubic centimeter of sulphuric acid each time, and reunite these liquids with that already introduced into the vial.

Seventh. Thereupon let a current of air pass over the surface of the liquid, warming it if necessary up to 60°, in such manner as to drive out the sulphur which has been carried away.

Eighth. Add a quantity of acetate of crystallized soda necessary to neutralize almost the totality of the sulphuric acid (for 10 cubic centimeters of sulphuric acid 15 grams of acetate are sufficient), then warm it in a water bath for a quarter of an hour, taking care to provide the vial with a plug bearing a glass tube of 1 meter in length performing the function of a refrigerator.

Ninth. Let it cool, and add 100 cubic centimeters of brine; then introduce the whole into a decantation funnel of 300 cubic centimeters, the lower part of which is graduated in tenths of cubic centimeters.

Tenth. Let it settle some time; then pour the liquid so as to bring the acetates of the superior alcohol within the limits of the graduation, and read off the number of cubic centimeters which they occupy.

The number read multiplied by 0.8 gives the quantity of butylic and amylic alcohols existing in the alcohol.

To ascertain the quantity of the propylic alcohols, filter over wetted paper the brine containing the alcohol, in order to free it from the carbonic bisulphite; then distill it just so far that the liquid marks 50° to 15° (in this moment the totality of the alcohols has passed to distillation); fill therewith a burette provided with a stopcock and let it drip drop by drop into a glass bowl containing 1 cubic centimeter of permanganate of potash at 1 gram per liter and 50 cubic centimeters of water until a copper-red tint resembling a type tint appears.

Under such conditions it requires nearly 2.5 cubic centimeters of alcohol at 50°, containing 1 per cent of isopropylic alcohol, to obtain the tint intended.

It follows that one can deduce therefrom, according to the number of cubic centimeters employed, the approximate tenor of the liquid in propylic alcohol. This number shall afterwards be entered at the taking of the initial assay.

In adding the number thus found to the result given by the method with sulphur, one will have the total proportion of essential oils existing in the 100 parts of assayed alcohol.

The approximative ascertainment of the quantity of the propylic alcohol thus secured will be sufficient in the majority of cases. If a more precise determination should be necessary it can be made by the homeotropic method.

NOTE.—The tint-of-copper type is obtained by mixing 20 cubic centimeters of fuchsine at 0.01° per liter and 30 cubic centimeters of neutral chromate of potassium at 0.500° per liter, and computing it up to 150 cubic centimeters by means of distilled water.

B. *An oily layer is floating on the surface of the brine.*

First. Take 100 cubic centimeters of alcohol, put them into a decantation bowl of about 1 liter with 500 cubic centimeters of brine and about 50 centimeters of water, stir it, and then let it settle.

Second. Separate the aqueous solution from the layer of essential oils and introduce it into a decantation bowl of 1 liter.

Third. Measure the number, N, of cubic centimeters of insoluble essential oils.

Fourth. Operate, then, upon the alcoholic liquor as has been said in A; then you will obtain for the dissolved essential oils a number, n, of cubic centimeters of acetates.

The strength will be the same of the two numbers, $N+(n\times 0.8)$.

CH. BARDY,
Director of the Central Laboratory of the Administration of Indirect Revenues.
BÉRARD,
Secretary of the Advisory Committee of Arts and Manufactures.

For compared copy:

E. ROUME,
Director of Foreign Commerce.

ANALYTIC PROCESS B.

DOSAGE (ASCERTAINMENT OF QUANTITY) OF WINE ALCOHOL IN THE ESSENTIAL OILS.

First. Put 500 cubic centimeters of essential oils into a decantation funnel of 1 liter.

Second. Add 150 cubic centimeters of brine, stir it energetically, and decant that water into a tap funnel of 1 liter.

Third. Stir with 125 cubic centimeters of carbonic bisulphite, and repeat four times this treatment, in order to remove from the liquid the butylic and amylic alcohols that may be in the solution.

Fourth. The carbonic bisulphite having been separated after each complete extraction, filter the aqueous solution through a moistened filter, then introduce it into a balloon of 1 liter.

Fifth. Distill the liquid and collect 250 cubic centimeters.

Sixth. Take the alcoholometric degree and the temperature, reduce it to 15° with the aid of the correction tables, and divide by 2 in order to have the tenor per hundred of alcohol. This number will be corrected if there be occasion for it by the tenor of propylic alcohol, the dosage (ascertainment of quantity) of which will be practiced in the same mode as has been said in the instruction for wine alcohol. (See for the dosage of wine alcohol.)

CH. BARDY,
Director of the Central Laboratory of the Administration of Indirect Revenues.
BÉRARD,
Secretary of the Advisory Committee of Arts and Manufactures.

For compared copy:

E. ROUME,
Director of Foreign Commerce.

ANALYTIC PROCESS C.

THE VOLUME OF ACETONE CONTAINED IN THE METHYLENES.

The assay necessitates the preparation of the following liquors:

ONE-FIFTH NORMAL SOLUTION OF IODINE.

Weigh exactly 127 grams of pure bisublimated iodine and dissolve with 250 grams of iodine of potassium in distilled water; bring the solution up to the volume of 5 liters at 15°.

ONE-TWENTIETH NORMAL SOLUTION OF HYPOSULPHITE OF SODA.

Dissolve in distilled water 62.025 grams of pure hyposulphite of soda dried on the air; bring the solution up to the volume of 5 liters at 15° after the addition of 15 cubic centimeters of soda.

SOLUTION OF SULPHURIC ACID.

Liquor containing 100 grams of pure sulphuric acid per liter.

SOLUTION OF SODA.

Liquor containing about 80 grams of soda (NaOH) per liter. These two solutions shall neutralize each other volume by volume.

STARCH PASTE OF AMYLON.

Dilute 5 grams of amylon in 500 cubic centimeters of distilled water; let it boil about an hour, then complete up to 1 liter with brine.

PRACTICE OF ASSAY.

First. Measure exactly 20 cubic centimeters of methylene, pour them into a 1-liter balloon half filled with distilled water, complete to 1 liter with water, then stir up vigorously to make it homogeneous.

Second. Introduce 30 cubic centimeters of soda into a standard silver bottle of 250 cubic centimeters.

Third. Add 20 cubic centimeters of the diluted solution of methylene.

Fourth. Pour N cubic centimeters of solution of iodine (about 55 cubic centimeters); in stirring let it react at least ten minutes.

Fifth. Pour at least 30 cubic centimeters of sulphuric liquor in such a manner as to render the liquid acid.

Sixth. Thereupon, let the liquor of hyposulphite settle until the decoloration be almost complete; at this moment add 4 to 5 cubic centimeters of starch paste of amylon, and continue pouring the solution of hyposulphite until complete decoloration. Note the number of cubic centimeters employed (let n be that number) and seek its value in cubic centimeters of iodine (the solution of hyposulphite being four times weaker than that of the iodine, it is convenient, in order to arrive at the equivalence, to divide the number n by 4).

Seventh. Subtract that number, $\frac{n}{4}$, from the number, N, of cubic centimeters of the iodine employed, and multiply the difference by 0.6073.

The formula $\left(N-\frac{n}{4}\right)\times 0.6073$ gives the per cent of acetone contained in the methylene. In order that the mixture may have all the exactness desired, it is necessary that $\frac{n}{4}$ be at least equal to 10 cubic centimeters of liquor of iodine.

Example:

$$N = 49.55^{cc}$$
$$n = 41.8^{cc}$$
$$\frac{n}{4} = 10.45^{cc}$$
$$N - \frac{n}{4} = 49.55 - 10.45 = 39.10^{cc}$$
$$39.10 \times 0.6073 = 23.74 \text{ per cent of acetone.}$$

NOTE.—If a blank assay made with the soda should indicate that the soda includes nitrites, it would be in place to keep account in the assays of the correction made necessary by the presence of these nitrites.

CH. BARDY,
Director of the Central Laboratory of the Administration of Indirect Revenues.

BÉRARD,
Secretary of the Advisory Committee of Arts and Manufactures.

For compared copy:

E. ROUME,
Director of Foreign Commerce.

ANALYTIC PROCESS D.

VOLUMETRICAL DOSAGE OF THE ACETONE IN THE METHYLATED ALCOHOLS.

First. Take exactly 50 cubic centimeters of methylated alcohol by means of a pipette provided with two strokes.

Second. Let them drop into a balloon of 500 cubic centimeters half-filled with distilled water.

Third. Complete till up to the stroke by adding distilled water, then stir up for rendering it homogeneous.

Fourth. Previously deduct 20 cubic centimeters of this solution and let it drop into a bottle of 750 cubic centimeters, corked with emery, into which previously 25 cubic centimeters of soda solution, at 80 grams per liter, have been placed.

Fifth. Add, then, 250 cubic centimeters of distilled water, then N cubic centimeters of one-fifth normal iodine (about 45 cubic centimeters), and stir it up.

Sixth. Let it react during at least fifteen minutes and at most twenty minutes at a temperature of between 15° and 20° C. Render it acid by the addition of 25 cubic centimeters of sulphuric acid at 100 grams per liter.

Seventh. Pour the one-twentieth normal solution of hyposulphite till almost complete decoloration, then add several cubic centimeters of starch paste amylon, and finish the decoloration.

Eighth. Note the number n of cubic centimeters employed.

Ninth. Divide this number n by 4, in order to have the value in cubic centimeters of the iodine not employed (this number $\frac{n}{4}$ should always at least be equal to 10 cubic centimeters).

Tenth. Subtract the quotient found from number N, and multiply this difference by 0.12146, in order to have the per cent of acetone in volume within the alcohol assayed.

$$\left(N - \frac{n}{4}\right) \times 0.12146 = \text{per cent of acetone.}$$

Example:

$$N = 44.1^{cc}$$
$$n = 44.4^{cc}$$
$$N - \frac{n}{4} = 44.1^{cc} - \frac{44.4^{cc}}{4} = 33^{cc}$$
$$33^{cc} \times 0.12146 = 4 \text{ per cent of acetone.}$$

CH. BARDY,
Director of the Central Laboratory of the Administration of Indirect Revenues.

BÉRARD,
Secretary of the Advisory Committee of Arts and Manufactures.

For compared copy:

E. ROUME,
Director of Foreign Commerce.

ANALYTIC PROCESS E.

DOSAGE OF METHYLIC IMPURITIES IN COMMERCIAL METHYLENES.

NECESSARY INSTRUMENT.

Roese tube, the lower part of which is gauged to 50 cubic centimeters and the upper bowl of which is of about 200 cubic centimeters.

The column reuniting these two parts is divided into cubic centimeters and tenths of 50 to 55 cubic centimeters.

MODE OF OPERATION.

First. Measure very exactly, at the temperature of 15°, a volume of 50 cubic centimeters of pure chloroform by means of a pipette provided with two strokes and a stopcock. Introduce this chloroform into the Roese tube.

Second. On the other part prepare the following mixture:

Twenty-five cubic centimeters of methylene.

Thirty-eight cubic centimeters of bisulphite of soda corrected at 1.35 density (see Note A).

Sixty cubic centimeters of water.

Cool this mixture to 15°, then pour it into the tube; close by means of a smooth cork; turn the apparatus upside down and shake it strongly; let it settle, and read off the augmentation of the chloroformic layer at the temperature of + 15°.

Third. Multiply by 4, in order to express the value of the total methylic impurities per centum of methylenes.

The quantity of impurities estimated by the above method should be at least of 2.5 per cent, deduction being made of the products saponifiable by the soda.

When the methylenes contain such products, the dosage of them will be made in the following manner:

First. Introduce 20 cubic centimeters of methylene into a balloon of about 200 cubic centimeters; add 20 cubic centimeters of half-normal caustic soda and some drops of alcoholic solution of phenol-phthalein at 1 per cent.

Second. Adapt the balloon to an ascending refrigeratory and warm in water bath at 100° for half an hour in order to destroy the ethers.

Third. Titrate the soda in excess by means of half-normal sulphuric acid; let N be the number of cubic centimeters of acid added. The difference, 50 — N, indicates the quantity of soda employed for the destruc-

tion of the ethers. The quantity of saponifiable products (calculated in acetate of methyl) contained in 100 parts in the volume of methylene to be assayed will be given by the formula—

$$\frac{100\,(50 - N \times 0.3894,}{n}$$

n being the number of cubic centimeters of methylene employed. (If the cipher of the total impurities surpasses 10 per cent, add 5 cubic centimeters of soda to more than 1 per cent of impurities—for example, 60 cubic centimeters for 12 per cent.) The number thus determined will be deducted from the quantum of impurities obtained by the treatment with chloroform. The pyroligneous impurities should be entirely due to the natural products of the wood distillation; any other material, of whatever nature it may be, added to the methylene for the purpose of falsifying the indications by the chloroform, will be attended by the rejection of the methylene.

NOTE A.—The bisulphites of commercial soda, though having 1.35° density, do not always give the zero in a synthetical mixture of pure methylene with 25 per cent of acetone. When this is the case, it is convenient to correct them in the following manner:

"Introduce 100 cubic centimeters of bisulphite to be corrected into a decantation bowl corked with emery and provided with a tap at the lower part. Add 175 cubic centimeters of water and 50 cubic centimeters of chloroform; stir it; then let the two layers completely separate. Filtrate about 5 cubic centimeters of chloroform over paper; receive the filtrated liquid in an assaying tube and add three drops of iodine solution, $\frac{N.}{5}$ Stir it forcibly and observe whether the chloroform takes a persistent rose tint. If the rose coloration should disappear (which is most frequently the case), add in the decantation bowl caustic soda (in the solution of 1.35 density) with the aid of a graduated burette, in small portions, repeating after each addition of soda the assay with iodine indicated above, until you observe a persistent rose coloration of the chloroform.

"If n represents the number of cubic centimeters of soda employed (density 1.35), it will be in place to add $N^{cc} \times 10$ of soda at 1.35 per liter of the bisulphite to be corrected. You then will proceed with the dosage by employing the following quantities of reagents:

	Cubic centimeters.
Pure methylene at 90° containing 25 per cent of acetone	25
Corrected bisulphite	38
Distilled water	60
Chloroform	50

"Under these conditions the augmentation of the layer of chloroform should be null."

CH. BARDY,
Director of the Central Laboratory of the Administration of Indirect Revenues.

II.

TYPE OF WINE ALCOHOL ADMISSIBLE TO METHYLATION.

(*Decision of March 1, 1893.*)

The alcohols presented for methylation shall not contain more than 1 per cent of essential oils.[1] They shall mark 90 alcoholometric degrees at the temperature of 15° (without correction)—it being under-

[1] This phrase shall be thus interpreted. The spirits destined for methylation shall contain only ethylic alcohol, water, and impurities head and tail (essential oils) which the industrial alcohols normally contain. When the alcohols presented shall contain essential oils, the maximum quantity of these products which here can be allowed will be 1 per cent, the dosage (ascertainment of quantity) being performed by the process adopted by the advisory committee of arts and manufactures (see *Analytical* process A).

stood that the tradesmen justifying the employment of methylated alcohol for special applications, such as the fabrication of varnishes or determined chemical products, will be authorized to present for methylation alcohols of a strength higher than 90°.

III.

TYPE OF METHYLENE THE ADMINISTRATION IS TO ADMIT AS METHYLATED SUBSTANCE.

(Decisions of March 1, 1893, and of July 25, 1894.)

The methylenes presented to the administration for use in the methylation of alcohols shall mark 90 alcoholometric degrees, the determination to be made at the temperature of 15° without correction. They shall contain 25 per cent of acetone, with an allowance of 0.5 per cent (five one-thousandths), more or less, and 2.5 per cent (twenty-five one-thousandths) at the minimum (deduction being made of products saponifiable by soda and expressed in acetate of methyl), of pyroligneous impurities that communicate an odor very pungent and characteristic of crude products of wood distillery, the complement up to 100 volumes being formed by water and methylic alcohol free from every combination. Every addition of products foreign to wood distillation will be attended, with full right, by the rejection of the methylene.

IV.

Abstract of the different processes of methylation of alcohols employed in the principal industries admitted to the benefit of the reduced tax, placed in harmony with the decisions rendered by the advisory committee of arts and manufactures at its sessions of March 1, 1893, and June 13, 1894.

VARNISHES AND DYES (TINCTURES) FOR VARNISHES.

(Session of June 13, 1894.)

Mix with 100 liters of alcohol, at 90° or above, at the temperature of 15° (without correction), 15 liters of methylene conformable to the regulation type.

This mode of methylation is authorized upon the express condition that the methylated alcohols do not leave the premises except in the state of finished products—varnishes or tinctures (dyes) for varnishes.

ALCOHOLS DESTINED TO BE SOLD FOR THE CLARIFICATION OR FOR THE FINISHING OF VARNISHES.

(Session of June 13, 1894.,

Mix with the alcohols of a strength equal or superior to 90° 15 per cent of regulation methylene and 4 per cent at least of resin or of gum resin. The products of the mixture can be put into circulation without having previously received an addition of green malachite or of heavy benzine.

3. FLATTERY.

(Sessions of April 9, 1873, and of June 13, 1894.)

Mix with alcohols 15 per cent of wood spirit conformable to the type. This mixture shall be exclusively used in the establishments where the methylation has been effected.

4. INSECT DESTROYER.

(*Sessions of April 9, 1873, and June 13, 1894.*)

Mix with alcohols 15 per cent of methylene. The product of the mixture shall be transformed on the place into a finished product.

5. SIMPLE OR COMPOUND ETHERS.

(*Session of August 18, 1883.*)

Make an intimate mixture of the alcohol to be methylated with 10 per cent of its volume of residue of ether conformable to the type (called No. 3) accepted by the committee October 22, 1873. For this, it will be sufficient to stir the mixture.

The officials will assure themselves, therefore, that the mixture is well made, by taking away a sample of the mass, which should exhale the strong and disagreeable odor of the residue of employed ether and, besides that, take an opaline tint by an addition of water. This trouble will be the sign of the precipitation through the water of the essences dissolved in the ether residue by the concentrated alcohol which composes, for a great part, those residues. This verification made, add to the mixture the quantity of sulphuric acid fixed by the committee in its session of January 18, 1873 (10 or 20 per cent), following the degree of the acid put into operation in conforming as much as possible with the prescriptions indicated at this epoch (warming to be extended till up to 80°). (See the circular, No. 381, of November 20, 1883.)

6. BROMHYDRIC ETHER (BROMURE OF ETHYL).

(*Session of October 25, 1882.*)

First process.—Mix 25 liters of spirit of 96°, 20 kilograms of bromine, and add to this mixture 2 kilograms of amorphous phosphorus diluted in 3 liters of alcohol of 96°. (Circular No. 369, of May 25, 1883.)

(*Sessions of February 20 and May 15, 1889.*)

Second process.—Mix 7.5 liters of spirit of 93° with 8.5 liters of sulphuric acid of 66° and 15 grams of bromine, with faculty to modify this proportion to the extent of 10 to 15 per cent. (Circular No. 558, of July 10, 1889.)

7. TODUHYDRIC ETHER (TODURE OF ETHYL).

Mix 6 liters of spirit at 96°, 4 kilograms of iodine, and 800 grams of amorphous phosphorus. (Circular No. 369, cited above.)

8. ETHYLATE OF SODA (SODATED ALCOHOL).

Mix 8 liters of absolute alcohol and 500 grams of sodium. (Circula[illegible] No. 369, cited above.)

9. NITRIC ETHER (AZOTIC ETHER).

Mix one part of weight of azotic acid of 36° and four parts of alcoh[illegible] of 96°. (Circular No. 369.)

10. CHLORHYDRIC ETHER AND DERIVATIVES.

Mix equal weights of alcohol of 96° and chlorhydric acid of 2[illegible]°. (See the circular, No. 369, cited above, p. 2, ref. 1.)

11. Aldehyde.

(Sessions of April 9, 1873, November 11, 1874, and June 13, 1894.)

Mix with alcohol of whatever degree 10 per cent of sulphuric acid of 66° Baumé, or 20 per cent sulphuric acid of 54°, taking care that the temperature of the mixture be brought up to 80° C. during the longest time that it will be possible for the officials to state it.

Pour the mixture over bichromate of potassium (which should be exclusively employed as oxydant) after the rising of the temperature which is produced has completely ceased.

The benefit of moderation of the tax is acquired by the methylator only when the operation has been recognized as regular, after an analysis made by the laboratories of the administration of samples which shall be taken away from the alcohol in its natural state, from the mixture of alcohol and acid, and, if that is deemed necessary, from the products finished or in course of preparation.

12. Alcohols for the Use of Dyers or of Manufacturers of Colors, and Methylated by these Tradesmen.

(Sessions of January 18, 1873, and June 13, 1894.)

Add to the alcohol 15 per cent of its volume of methylene conformable to the regulation type. The product of the mixture shall serve, in the factory where the mixture has been effectuated, for dyeing or for the manufacture of colors. It can not be admitted to circulation outside the factory.

13. Tannins and Different Alkaloids.

(Sessions of April 9, 1873, December 9, 1874, and June 13, 1894.)

Add to the alcohol 15 per cent of its volume of methylene conformable to the regulation type. The product of this mixture shall be transformed on the place into finished products.

14. Fulminate of Mercury.

(Sessions of July 29, 1874, and June 13, 1894.)

First process.—Mix previously alcohol with 15 per cent of its volume of wood spirit, conformable to the regulation type.

(Session of December 6, 1875.)

Second process.—Add to the spirits set into operation the total of unfinished residues coming forth from the preceding operations.

15. Alcohols for Lighting and for Heating.

(Session of March 1, 1893.)

To 100 liters of alcohol of 90° add (1) 15 liters of methylene (2) 0.5 liter (500 cubic centimeters) of heavy benzine,[1] and (3) 1 gram of green malachite.[2]

---

[1] The heavy benzine shall have the odor characteristic of the heavy products of the distillation of coal, and boil between 150° and 200°. It is unattackable by a lye of soda of 36° Baumé. It is rendered turbid through the addition of water, and should immediately dissolve, without being rendered turbid, in four times its volume of alcohol of 90°.

[2] The green malachite is a well-defined industrial product which the methylators can easily procure. It should be entirely soluble in the alcohol.

16. Transparent Soaps.

(Sessions of November 2, 1881, and June 13, 1894.)

Mix with the alcohols 15 per cent of wood spirit conformable to the type.

These mixtures shall be employed on the place; they can not circulate outside of the establishment where they have been worked.

17. Chloroform.

(Session of November 3, 1886.)

See the description of the methylation processes in the circulars No. 337, of June 23, 1882; 424, of February 28, 1885, and 461, of December 15, 1886.

18. Chloral and Chloral Hydrate.

(Session of November 2, 1881.)

Let pass over the alcohol a current of chlorine gas which from the first moments on determines the formation of numerous products by which the production of the chloral is accompanied—aldehyde, chlorhydric acid, chlorhydric ether, etc. The manufacturer shall represent for each liter of alcohol of 95° a quantity of chlorohydrate, which can not be less than 780 grams. (Circular No. 337 of June 23, 1882.)

19. Collodion.

(Session of November 3, 1886.)

Mix the alcohol with its volume of ether; add to the mixture the pyroxylin, and, in the case where the use of the collodion shall be immediate, iodures, bromures, etc., which shall transform it into a commercial product.

The manufacturer shall represent for each liter of alcohol of 95° a quantity of collodion which can not be less than 2 liters; this collodion, moreover, shall contain one part of alcohol at most to one part of ether, and keep in dissolution 6 grams of pyroxylin per liter. (Circulars No. 337, cited above, and No. 461, of December 15, 1886.)

20. Liquid Rennet.

(Sessions of July 1 and November 11, 1874, and of June 13, 1894.)

The alcohol employed for the manufacture of liquid rennet can be considered as sufficiently methylated by its dilution with brine, upon condition that the alcoholic degree of this dilution does not exceed 10°. In default of this process, or of an analogous process, the methylation should be operated by the addition of 15 per cent of methylene.

TABLE OF CONTENTS.

	Paragraphs.
The committee of arts and manufactures to determine for each branch of industry the conditions under which the methylation of alcohol shall take place	1
Methylene or wood spirits; its properties as a methylating agent; abuses to which it gives rise	2, 3
Fraud through the employment of essential oil	4
Defensive measures proposed by the administration and adopted by the committee of arts and manufactures	5–7
Type of vinous alcohol to be admitted to methylation	8–12
Type of methylene to be accepted as methylating agent	13
Uniform process of methylation	14
Heavy benzine	15
Green malachite	16
Obligatory analytic substances	17
General disposition	18
Declaration to be made by the methylator before each methylation	19
Obligatory taking of samples	20, 23
The methylene is no longer inspected on the premises of manufacturers, merchants, and depositors	21
Withdrawal of padlocks, nippers, and other objects which have become useless	22
Necessity to watch over and control the operation	24
Management and examination of the methylation tubs	25
Verification of alcohol; trial samples taken from the alcohol, from the methylating substances, and from the methylated alcohol	26–28
Distribution of the samples between the central laboratory and the district laboratories of Arras, Bordeaux, Nantes, and Marseilles; notification of the results of the analysis	29
Packing; transmission of samples, and of formula 20 E	30, 33
Action to be taken on the notification of the results of the analysis	34
Uniform rate of daily deliveries to be made by the addressee to the nonbonded person	35, 36
The methylated alcohols must retain their specific character	37, 38
Transition arrangement	39

	Pages.
Table indicating the extent of jurisdiction of the laboratory	328
Analytical processes:	
A. Testing for percentages of essential oil in the alcohol	328
B. Testing for percentages of vinous alcohol in the essential oil	330
C. Volumetric testing for percentages of acetone in the methylene	331
D. Volumetric testing for percentages of acetone in the methylated alcohol	332
E. Testing for percentages of the methylic impurities in commercial methylene (Barillot process)	333

GENERAL DIRECTION OF INDIRECT CONTRIBUTION.

[Circular No. 61, of June 25, 1893—Second Division, Second Bureau.]

METHYLATED ALCOHOL.

Notice of a new decision of the committee of arts and manufactures concerning the fixation of a type of vinous alcohol to be admitted for methylation, the adoption of a new type of methylene, and the analytic processes for testing sample substances.

RECOMMENDATIONS TO THE SERVICE.

1. In article 4 of the law of August 2, 1872, admitting to the benefit of a special tax called methylation tax, the rate of which is at present 37 francs per 50 hectoliters of pure alcohol, those alcohols which are methylated in such

way as not to admit of being consumed as beverages. In article 5 the law stipulates that the methylation shall take place in the presence of the employees of the excise, and it has conferred on the committee of arts and manufactures the duty of determining for each branch of industry the conditions under which this methylation is to be effected.

2. Acting by virtue of this authority conferred, the committee, in its meeting of January 18, 1873, adopted in a general manner methylene, or wood spirits, as methylating agents, and at the meeting of May 11, 1881, the committee gave the following definition of wood spirit, which is still in force. The regulation wood spirit "shall mark 90° of the alcoholometer, shall contain at most 65 per cent of pure methylic alcohol, and 35 per cent at least of foreign matter, among which acetone shall figure to about 20 to 25 per cent. The 65 per cent of methylic alcohol shall be free—that is to say, not exist in combination. The committee was especially guided in this choice by the characteristic odor of this product, which renders any alcohol to which it has been added absolutely unfit for consumption.

3. Until recently the methylene employed was normal; it contained the regulation proportions of methylic alcohol and acetone, and possessed the very characteristic odor of the product of wood distillation. Thus they efficaciously guaranteed the interest of the treasury. But the action by distilleries and by chemical industries at present renders it possible to obtain methylic alcohol and acetone in a state of purity and with an odor but slightly different from that of ordinary alcohol. Accordingly, methylene containing methylic alcohol and acetone in the proportion indicated by the committee, but completely devoid of the characteristic odor which causes the product to be adopted, is at present frequently employed. Adding to the ordinary alcohol this methylene furnishes spirituous liquors which, although methylated according to regulations, are capable of entering directly into consumption as beverages, or to serve for the preparation of pharmaceutical product.

4. Alongside of this fraud, which is perpetrated by modifying the methylating substance, is another, against which the administration is equally powerless. It consists in replacing a quantity of the vinous alcohol intended for methylation by more or less important quantities of essential oil or residues of distillation. These liquids, the density of which approaches very closely that of spirituous liquors—to such a degree that it is easy to confound them with ill-tasting spirits—are in fact free from impost under certain conditions determined by the circular, No. 275, of September 22, 1879, when they do not contain more than 6 per cent of pure alcohol. The alcohol, which has diverted and has been substituted, possessing good taste, is clandestinely delivered for consumption.

5. Up to the present the administration is powerless against these abuses. In fact, although chemically pure acetonated methylene is useless for methylation the administration can not decline it. since its composition is con-

formable to the definition made of it by the consultative committee at its meeting of May 11, 1881. Furthermore, in default of any fixation of a type of vinous alcohol admitted for methylation the administration can not reject, whatever is otherwise in degree of impurity, an alcohol in a condition of nature—that is to say, has not yet been methylated or received additions of methylating substances.

In the interest of the treasury it has become indispensable to remedy this situation. The administration, after a study of the question, has submitted to the examination of the committee on arts and manufactures a body of measures destined to detect fraud.

6. This committee, which exists by virtue of an express authorization of the legislature, and the decisions of which, therefore, have of themselves a force of law, adopted, at its meeting of March 1 last, the following regulations which, having been sanctioned by the competent ministers, are operative.

(1) Alcohol presented for methylation shall not contain more than 1 per cent of essential oil.[1] It shall mark 90° of the alcoholometer at the temperature of 15° (without correction), it being understood that the manufacturers showing necessity for the employment of methylated alcohol for special application, such as the manufacture of varnishes or certain chemical products, shall be authorized to present for methylation alcohol of a higher strength than 90°.

(2) Methylene presented to the administration to be employed for the methylation of alcohol shall mark 90° of alcohol, this determination being made at the temperature of 15° without correction.

It shall contain 25 per cent of acetone, with a possible variation of 0.5 per cent (five one-thousandths), more or less, and 5 per cent (five one-hundredths) at the minimum of pyroligneous impurities, which communicate to them a very strong and very characteristic odor of the raw product of wood distillation, the complement to 100 volumes being formed of water and methylic alcohol.

Any addition of product foreign to the distillation of wood shall entail the full right to reject the methylene.

(3) To effect the methylation, 100 liters of alcohol at 90° shall be mixed with 15 liters of methylene of the type defined above. To this mixture there shall be added 0.500 (500 cubic centimeters) of heavy benzine, having the characteristic odor or the heavy product of coal distillation, and boiling between 150° and 200°. The methylation shall be terminated by dissolving in the liquid thus obtained 1 gram of green malachite per hectoliter.

---

[1] This phrase must be interpreted thus:

"The spirituous liquors intended for methylation shall contain only ethylic alcohol, water, and the few impurities of head and tail (essential oil) normally contained in the alcohol of industry.

"When the alcohol presented contains essential oil, the maximum quantity of these products permissible shall be 1 per cent, the testing for percentages being accomplished by the process adopted by the consultive committee of arts and manufactures." (See Annex A.)

The mixture of these diverse substances shall be rendered thoroughly homogeneous by sufficient shaking in the presence of the agent of the service.

The methylated alcohol shall keep its specific character until it is used. It shall neither be lowered in strength nor receive additions of essential oil, essences, or any other product capable of modifying its odor, taste, or other properties, nor be subjected to any treatment whatever, under penalties of losing the benefit of the methylation and becoming liable to the full taxes falling on pure alcohol. The methylated alcohol employed for industrial use in factories where the methylation is effected may be exempted from coloring by green malachite.

In alcohols intended for the manufacture of varnishes the addition of 0.5 per cent of benzine may be replaced by the addition of 2 kilograms of resin or resinous gum, the nature of which shall be determined by the manufacturer, and which shall be dissolved completely in the presence of the agent of the service.

Four samples shall be taken from every methylation, whatever be its importance, to wit:

One sample of the methylating methylene.

One sample of the natural alcohol.

One sample of the heavy benzine.

One sample of the methylated alcohol.

These four samples will be sent to the laboratory of the administration. The verification shall in all cases be made on natural alcohol and the methylated alcohol, the analysis of the two other samples being made only in case the verification of the methylated alcohol should have presented an anomaly.

The processes of analysis obligatory for the administration as well as for the manufacturers shall be those described in the instructions drawn up by the director of the central laboratory for indirect contribution, and contained in Sheets A, B, C, D, E annexed to the report.[1]

7. Thus, the measures adopted by the committee are the following:

(1) The fixation of a type of vinous alcohol to be admitted for methylation.

(2) A new definition of the type of methylene to be accepted as methylating substance.

(3) The modification of the present processes of methylation, which are based on the employment of methylene, and the prohibition of any treatment of the methylated alcohol intended to modify its odor, taste, and other properties.

(4) Finally, the determination for the testing of the sampled substances (methylene, natural alcohol, heavy benzine, methylated alcohol) of the processes obligatory for the administration of the indirect contribution as well as for the manufacturers.

In adopting these measures the committee of arts and manufactures was guided by considerations which I will mention hereafter.

---

[1] See pages 39 and 40 of the present circular.

Fixation of a type of vinous alcohol to be admitted for methylation.

8. The alcohols presented for methylation are for the most part ill-tasting spirits, resulting from mixtures in variable proportions of heads and tails of rectification. These liquors contain certain of these impurities eliminated from the fine alcohol—notably, proplyic, butylic, and amylic alcohol—improperly designated under the name of essential oil. Even their composition varies according to the kind of first materials from which they are derived, and also according to the greater or less perfection of the apparatuses and processes of rectification. In brief, they are taxable according to their percentage of alcohol, without distinction between pure vinous alcohol and vinous alcohol charged with superior alcohol. In fact, the principle which causes every liquid containing any quantity of alcohol to be subject to imposts in proportion to its alcoholic strength is waived only in favor of the essential oil or residues of distillation containing at most 6 per cent of alcohol.

9. Fraud has flourished by this lack of distinction between pure vinous alcohol and vinous alcohol more or less charged with superior alcohols or essential oil. Those who perpetrate such fraud proceed ordinarily as follows:

When they wish to effect a methylation, they operate not on ill-tasting spirits, but on good-tasting alcohol. They take out a greater or less quantity of that alcohol—one-fourth, one-third, or one-half, for example—and substitute for it an equivalent quantity of the residues of distillery, called essential oil. Thus they compound out of all parts the ill-tasting alcohol which they intend for methylation. As regards the pure alcohol which has been withheld, it is delivered for consumption without payment of any tax.

10. I said above that the revenue service and the laboratories at present are powerless against these maneuvers. When any alcohol is presented to them, either to be methylated or to be analyzed, neither of them has anything else to do than to assure itself of one thing, namely, that this alcohol is alcohol of the kind called "natural"—that is to say, which has not been already methylated. Now, alcohol charged with essential oil contains none of the substances employed for methylation; consequently it must be considered as ordinary alcohol. This presents a source of very considerable fraud. In order to check it, the committee of arts and manufactures has limited the percentage of essential oil in alcohol to be admitted for methylation to the amount ordinarily contained in the ill-tasting alcohols issuing from the distilleries.

11. This measure could not hitherto be adopted because there existed no method at once simple and rigorous to determine with certainty the contents in essential oil of alcohols in industry. This is no longer the case. Profiting by the observation made by different experimenters under the direction of the central laboratory of the administration, Mr. Bardy has succeeded in filling this gap. Having verified the exactness of his process on synthetic alcohol of known composition, he applied it to alcohols presented

for methylation by manufacturers and to ill-tasting alcohols taken by order of the administration in factories employing different kinds of first substances. He has thus ascertained that the ill-tasting alcohol of industry contains, with very rare exceptions, less than 1 per cent of essential oil. These results agree with those which Messrs. Wendisch and Herzfeld have obtained in Germany by more complicated processes of analysis.

In the opinion of the committee this limitation will suffice to check the fraudulent mixtures referred to, and it can not give rise to any justifiable objection, for the distillers may, as in the past, dispose of for industrial uses the low products of their manufacture which are unsuitable for consumption as beverages.

12. In order further to facilitate the control of the methylated alcohol, the committee has furthermore decided that alcohol can not be accepted for methylation unless it marks exactly 90° of the alcoholometer, this determination being made at the temperature of 15° without correction. But to manufacturers who show reason for employing methylated alcohol for special uses, such as the manufacture of varnishes or certain chemical products, the committee has granted authority to methylate alcohol of a percentage of higher than 90°.

New definition of the type of methylene to be accepted as methylated substance.

13. In order to check the fraud which is practiced by the aid of methylene devoid of odor, the committee has defined in a more rigorous and more complete manner the type of this substance which it had in view at its meeting of May 11, 1881.

The well-rectified methylene, which at that time did in fact possess a characteristic odor, was due to the pyroligneous products which normally accompany methylic alcohol and acetone in the distillation of wood. Insufficiently determined, these products vary with the nature of the wood submitted to distillation and with the processes of rectification; nevertheless, it has been possible to fix the lowest in the minimum contents of these compounds which must exist in the methylene proposed as methylating substances by utilizing the method indicated by M. Barillot, a chemist very experienced in the treatment of the product of the distillation of wood.

This method is founded on the property possessed by these products of separating from methylic alcohol and acetone, owing to their solubility in chloroform in the presence of a certain quantity of water and bisulphate of soda.

This minimum content in pyroligneous product, which it was not necessary to specify at the time when industry prepared neither methylic alcohol nor acetone in a state of purity, has nowadays become indispensable. It will in nowise hamper the honest manufacturers, who will continue, as in the past, to manufacture methylene sufficiently rectified, but it will put an end to the employment of methylating substances constituted out of all kinds by mixtures of pure methylic alcohol and pure acetone.

Regulations for the different operations of methylation. Modification of the present processes of methylation which are based on the employment of methylene.

14. Under reserve of several special processes, the use of which for the preparation of products duly determined has been authorized by the committee of arts and manufactures, and by virtue of a decision which has been notified to the service, methylene must in principal be employed as methylating agent.

At present it is added in the proportion of one-fifth of the volume of alcohol intended for heating and illuminating purposes and in the proportion of one-ninth of those which are employed otherwise.

These two modes of methylation did not answer any justifiable need, and they favored abuses. The committee has replaced them by the uniform processes described on page 8 of the present circular, and which may be thus summarized:

Add to 1 hectoliter of alcohol of the regulation type 51 liters of methylene, also of the type; then to the total volume of the methylated alcohol add 0.500 liters (500 cubic centimeters) of heavy benzine; finally, to 1 hectoliter of the latter mixture add 1 gram of green malachite.

15. I have explained the motive which has induced the committee to fix a type of alcohol to be admitted for methylation and to modify the present type of methylene. I will indicate the reasons which the committee has also reached for the employment of heavy benzine and green malachite.

The heavy benzine, which in the alcohol serving for the manufacture of varnishes may be replaced by resin or gum resin in fixed proportion, shall be added in very small quantities; thus, it will not take from alcohol the qualities required for industrial application, but it will furnish to the revenue service precious means of investigation—taste, odor, clouding by water—which will enable the officer, for the most part without having recourse to chemical analysis, to recognize if the spirituous liquors presented for methylation are natural alcohol or alcohol already methylated. The heavy benzine which is adopted has in fact the very characteristic odor of the heavy product of the distillation of coal; it is not attacked by a soda lye of 36° Baumé; it becomes cloudy by the addition of water, and must dissolve immediately without cloudiness in four times its volume of alcohol of 90°.

16. As regards the green malachite, which is hereafter to be added to the methylated alcohols which are not employed on the spot, and which consequently are intended to circulate—such as alcohol for heating and illuminating—the addition is intended, by coloring the methylated alcohol, to complete the means of control newly placed at the disposal of the service.

Determination of the obligatory analytic processes.

17. Under the terms of the decision of March 1, every operation of methylation, no matter what its importance, requires the taking of samples, to wit:

Of the methylene used for methylating.

Of the alcohol in nature.

Of the heavy benzine.

Of the methylated alcohol

27. These verifications having been made, the revenue officer takes a sample of the alcohol presented for methylation. After the bottles, whose state of cleanliness and dryness has been carefully ascertained, have been filled, corked, and placed in metallic cases, and after these cases have been sealed with the double seal of the manufacturer and of the excise, the officer shall under the same condition and in the following order take his test samples of the methylene, the heavy benzine, and the methylated alcohol.

To guard against errors, or even against unlawful substitution in the sample substances, it is of essential importance that this recommendation be strictly observed, and that the samples be never left alone so long as their packing has not been entirely completed. For holding the test samples taken of the natural alcohol, methylene, and the methylated alcohol, those packing devices shall be exclusively employed the adoption of which has been notified by the general letter, No. 15, of October 31, 1892. For the heavy benzine, for which the weight of the sample shall be about 100 grams, flasks shall be used, the value of which shall be refunded on the completion of the product. Conformably to the dispositions of the autographed letter, No. 12307, of March 25, 1893, there shall be placed on the inside of the cases and boxes containing the flasks of heavy benzine a label the indications of which shall be confirmed by the contents.

28. All the samples, of course, must be the exact expression of the product, whatever they be, from which they have been taken.

To this end I have indicated the course to be followed for the alcohol in nature. I will now set forth the course to be observed for the methylating substances and for the methylated alcohol.

Methylene.—Pour into a special vat arranged under the same conditions as that into which the natural alcohol has previously been placed the total quantity of wood spirits necessary for the methylation; then, having sufficiently beaten it to obtain complete homogeneity of the methylating liquid, proceed to take the test sample, and without going away add the methylene to the alcohol declared for methylation and which has already been sampled.

Methylated alcohol.—According to the destination for which the methylated alcohol is intended, its methylation is completed by the addition, in the proportions determined by the committee, either of heavy benzine, of resin, or of gum resin, and, aside from the exceptions specified, of green malachite,[1] as coloring matter. The green malachite or the resin shall be dissolved apart in a small quantity of alcohol, then added to the mixture.

It has not seemed necessary to have the resin, gum resin, or green malachite tested, but the committee of arts and manufactures deemed that formality indispensable for the heavy benzine.

[1] The green malachite is a well-defined industrial product which the methylators can easily procure. It must be entirely soluble in alcohol.

When, therefore, the latter substance is employed, it will be sampled, taking care to shake the liquid beforehand.

The samples shall not be taken from the methylated alcohol until the mixture of the alcohol with these different substances—a mixture which, of course, is to be effected in the vats in which the alcohol has been poured and verified—has been rendered homogeneous by sufficient shaking, and until, in the case of addition of resin or gum resin, the solution of the added substance is complete.

Cooperation of certain regional laboratories in the analysis of samples.

29. The new obligation imposed on the excise to cause the natural alcohol and the methylated alcohol and, if need be, the methylating subtances to be tested for every methylation will greatly increase the number of analyses to be made. It would be impossible to avoid delays prejudicial to the different interests concerned if this work continued to be centralized as it is now in a single laboratory.

In order to facilitate the task of the central laboratory and at the same time to obtain all the desirable dispatch in expediting business, the administration decides that henceforward the samples shall be distributed between the latter establishment and the local laboratories of Arras, Bordeaux, Nantes, and Marseilles. (For the territories of the laboratories, see the table printed on page 328.)

30. Aside from the case of contestation are judicial suits, in which case, as in the past, three or even four samples are to be taken for every product. Ordinarily, only two samples will be taken from every product (natural alcohol, methylene, benzine, and methylated alcohol).

These samples are to be packed, sealed, and labeled under the conditions already indicated.

The boxes composing one of the double samples shall be kept by the employees, who shall restore the contents to the manufacturer as soon as the result of the analysis has been notified to them.

According as the establishment of the methylators depends on the central laboratory or on one of the local laboratories, the boxes which form the other samples shall be sent as postal packages to the administration under the stamp of the second bureau of the second division, or to the director at whose residence is the testing office. This shipment will be announced by means of one of the two copies of Bulletin of Advice No. 20 E, the second copy of which shall continue to be addressed to the chief of the service of the administrative circumscription (director or subdirector), who shall transmit it without delay to the administration or to the director at whose residence the local laboratory is installed.

31. Upon their reception in the offices of the four directors who will hereafter be charged with this service, the sample shall be inscribed on a special register numbered beforehand and containing, besides the indications of the label No. 20 E, the date of receipt and transmission to the laboratory, as well as the information relating to the result of the analysis. They shall then be unpacked, furnished

with a label reproducing only the inscription number o the register of order, and at once sent to the testing office

The bottles and flasks—I insist on this recommenda tion—shall bear no indication whatever stating wher they came from or what they contain.

32. As they arrive in the testing laboratory the sample shall be registered on a special tag. They shall be ana lyzed with the least possible delay and the result of th analysis shall be at once reported by means of the thir sheet of Blank No. 20 E, either by the administration o by the director of the testing office—on the one hand t the chief of the circumscription (director or subdirector in which the sample has been taken, and on the other han to the local chief who has taken the samples and who wil be charged with bringing them to the knowledge of th person concerned.

33. I will recall on this occasion that the director and sub director, by frequent and minute comparison, must assur themselves on their responsibility that the notification ha been accurately made and that no abuse has been com mitted.

34. If the methylation has been recognized as regular, th alcohol submitted for methylation is definitively admitted t the benefit of the reduced tax. The general consumptio tax, on the contrary, is to be collected if the methylatio has not been deemed valid.

The application of this measure will meet with no diffi culties on the part of the methylators who enjoy the credi of the tax. In the case of those who have renounced thi privilege it will be necessary, notwithstanding the payment of the methylation tax, to suspend the discharge of th permits which have accompanied the spirituous liquors u to the notification of the analysis and, consequently, up t adjusting the operation either by the payment of the com plementary duty or by a new methylation, if the adminis tration authorizes it.

The attention of manufacturers is directed to this point The revenue service will not fail to inform them of the ris to which they would expose themselves if they ship thei product before receiving information of the result of th analysis applicable to the methylation. In fact, should i happen that one of them was recognized as irregular it woul no longer be possible for them to apply for authorization t complete it, and, consequently, they could not be allowed t adjust the situation except by the payment of the genera consumption tax.

Special rules for the circulation of simple mixtures of alcohol, methylene, benzine, resin or gum resin, and green malachite, (Circular No. 314, pp. 19-22.)

35. To the two processes which it had previously adopte for the methylation of alcohol by means of methylene, th consultative committee of arts and manufactures has sub stituted a single formula. It is the formula described i the present circular.

36. The adoption of this formula entails correlativ changes in the fixation of the deliveries of simple mix tures of methylated alcohol which the methylators ar authorized to make per day and per addressee to person who are not bonded—that is to say, who are not provide

with a wholesale merchant's or distiller's license. At present the rate of these deliveries is limited to 100 liters if the alcoholic mixture has been compounded out of 100 liters of alcohol and at least 20 liters of methylene; and to 20 liters only if the mixture has been made only of 100 liters of alcohol and less than 20 liters of methylene.

Hereafter, the alcoholic mixture will, independently of other substances, comprise only 15 liters of methylene per 100 liters of alcohol. Thus fixedly taken, the administration would be obliged to fix the quantities which methylators are allowed to send each day and to each addressee at 20 liters of methylated alcohol. Nevertheless, considering that by the addition of inspecting and coloring matters (heavy benzine and green malachite) the new formula of methylation furnishes to the treasury more perfect guarantees against abuse, the administration consents, by way of trial, to authorize the shipment of the goods in proportion of 100 liters per day and per addressee for persons who are not bonded.

37. The methylated alcohols in question can, notwithstanding be shipped—no matter whether the addressees are bonded or not—provided that neither their strength has been lowered nor any addition has been made to them of essential-oil essences or any other product capable of modifying their odor, taste, or other properties, nor any treatment whatever given them. The alcohols intended to be utilized on the spot for industrial purposes must also preserve their specific characters and not be the object of any of the manipulations that have just been indicated. All methylated alcohols which are found at any moment not to comply with the regulation conditions shall be considered as regenerated and, consequently, become liable to the consumption tax.

38. Any infringement of these regulations shall be recorded in protocol, by virtue of article 11 of the decree of January 29, 1881.

Transition arrangement.

39. In order to facilitate to manufacturers the production of alcohol and methylene conformable to the new type and to allow the holders to dispose of the alcohols methylated according to the old formula, the new regulations shall not become operative until October 1 next.

The persons concerned shall at once be notified thereof and be invited to take the necessary measures for the date above cited.

Up to September 30 the present rules will therefore be applied. The only exceptions are the following:

(1) For the shipment and analysis of various samples—methylene and pure alcohol—which after receipt of the present circular must be addressed, according to the place where they were taken, to one of the laboratories designated in the following statement, which indicates the locations and boundaries of the testing laboratories.

(2) As concerns, on the one hand, the addition of heavy benzine and green malachite to the methylated alcohols intended for heating and illuminating purposes, of resin or gum resin to those which are intended for the manufacture

of varnishes, and, on the other hand, the obligation whi is expressly imposed on the methylators and holders methylated alcohol to keep these products at their speci character.

In this respect the precepts which form the object paragraphs 6, 28, 29 to 33, 37, and 38 of the present cir lar shall become operative immediately.

A. CATUSSE,
Counselor of State, Director-General

For the duplicate:

DECHAUD,
Administrator of the Second Division

Department attached to the central laboratory.

[Address the director-general of indirect contribution at Paris, s ond division, second bureau.] Allier, Ardeche, Aube, Aveyron, Cal dos, Cantal, Charente-Inferieure, Cote-d'Or, Creuse, Dordogne, Dou Eure, Eure-et-Loir, Herault, Indre, Indre-et-Loire, Jura, Loir-et-Cl Loire, Loire (Haute), Lot, Lozere, Manche, Marne, Marne (Haut Meurthe-et-Moselle, Meuse, Nievre, Orne, Puy-de-Dome, Rhin (Haut Saone (Haute), Saone-et-Loire, Seine, Seine-et-Marne, Seine-et-O Vienne, Vosges, Yonne.

Department attached to the regional laboratory.

Arras.—[Address the director of indirect contribution at Arr Aisne, Ardennes, Nord, Oise, Pas-de-Calais, Somme.

Bordeaux.—[Address the director of indirect contribution at B deaux.] Ariege, Aude, Charente, Cher, Garonne (Haute), Gers, G onde, Landes, Loiret, Lot-et-Garonne, Pyrenees (Basses), Pyrene (Hautes), Pyrenees (Orientales), Tarn, Tarn-et-Garonne, Vie (Haute).

Marseilles.—[Address the director of indirect contribution at M seilles.] Ain, Alpes (Basses), Alpes (Hautes), Alpes-Maritimes, Bouch du-Rhone, Correze, Drome, Gard, Isere, Rhone, Savoie, Savoie (Haut Var, Vaucluse.

Nantes.—[Address the director of indirect contributions at Nante Cotes-du-Nord, Finistere, Ille-et-Vilaine, Loire-Inferieure, Maine-Loire, Mayenne, Morbihan, Sarthe, Seine-Inferieure, Sevres (Deu Vendée.

Methods of analysis.

ANNEX A.

TESTING FOR CONTENTS OF ESSENTIAL OIL IN ALCOHOL.

QUALITATIVE ANALYSIS.

Take 1 cubic centimeter of alcohol; add 25 cubic centimeters of d tilled water, then 1 cubic centimeter of permaganate of potassium a gram per liter. If the color does not sensibly change its shade aft some time, it shows that there is only a trace of essential oil, and the is then no occasion for testing for the percentage.

If the color changes more or less abruptly to maroon or yellow, t following test is to be made:

Place in a test tube 5 cubic centimeters of alcohol, and after it 30 35 cubic centimeters of salt water colored by a little aniline violet.

A. No oily layer floats on top.

B. A greater or less quantity of higher alcohol of violet tinge floats at the surface of the liquid.

A. No oily layer floats on top of the salt water.

1. Take 100 cubic centimeters of alcohol; introduce it in a decanting funnel holding 1 liter; add 60 to 70 cubic centimeters of carbon sulphide, then 450 cubic centimeters of saturated salt water and a quantity of water sufficient to redissolve the water which precipitates (about 50 cubic centimeters).

2. Shake the funnel vigorously, then let it rest.

3. Decant the carbon sulphide into a funnel provided with a stopcock and holding about 300 cubic centimeters, avoiding the introduction of water.

4. Empty twice four in the same way and add the carbon sulphide to that of the first test.

5. Then shake the carbon sulphide with a quantity of sulphuric acid sufficient to cause the carbon sulphide to drop to the bottom of the funnel after shaking (2 to 3 cubic centimeters are generally sufficient).

6. Let it settle well; then decant the acid into a vial holding 125 cubic centimeters; wash the carbon sulphide twice with 1 cubic centimeter of sulphuric acid each time, and add these liquids to that already introduced in the vial.

7. Then pass a current of air over the surface of the liquid, heating, if necessary, up to 60°, so as to draw away the sulphide that may have been carried along.

8. Add a quantity of crystallized acetate of soda necessary to neutralize almost all the sulphuric acid (15 grams of acetate suffice for 10 cubic centimeters of sulphuric acid), then heat over a water bath for a quarter of an hour, taking care to close the vial with a stopper bearing a glass tube 1 meter long, serving as a cooler.

9. Let cool, and add 100 cubic centimeters of salt water; then introduce the whole into a decanting funnel holding 300 cubic centimeters, the lower part of which is graduated to tenths of cubic centimeters.

10. Let it stand for some time, then decant the liquid so as to bring the acetate of the higher alcohol within the limits of the graduation, and read the number of cubic centimeters which they occupy.

The number read multiplied by 0.8 gives the quantity of butylic and amylic alcohol existing in the alcohol.

In order to ascertain the percentage of propylic alcohol, filter through wet paper the salt water containing the alcohol, in order to free it from the carbon sulphide; then distill until the liquid marks 50° at 15° (at that moment the whole of the alcohol has passed in distillation); pour it into a burette provided with a stopcock and make it run drop by drop into a beaker containing 1 cubic centimeter or permanganate in the proportion of 1 gram per liter, and 50 cubic centimeters of water, until you obtain a copper-red tint resembling a typical tint.

Under these conditions about 2.5 cubic centimeters of alcohol at 50° containing 1 per cent of isopropylic alcohol are needed to obtain the desired tint.

Hence it follows that according to the number of cubic centimeters used, one is able to deduce the approximate content of the liquid in propylic alcohol; this number will then have to be reduced to the initial test sample taken.

By adding the number thus found to the result given by the sulphide

method, one will obtain the total proportion of essential oil in the one-hundredth part of alcohol treated.

The approximate test of the propylic alcohol thus performed will suffice in the majority of cases. If a more precise determination is necessary, it will be made by the homeotropic method.

NOTE.—The typical copper tint is obtained by mixing 20 cubic centimeters of fuchsine containing 100 grams per liter and 30 cubic centimeters of potassium chromate at 0.5 grams per liter and bringing them up to 150 cubic centimeters by means of distilled water.

B. Case in which an oily layer floats on the salt water.

1. Take 100 cubic centimeters of alcohol; put it in a decanting bowl containing about 1 liter with 500 cubic centimeters of salt water and about 50 cubic centimeters of water; shake, then let it stand.
2. Separate the aqueous alcoholic solution from the layer of essential oil and introduce into a decanting bowl containing 1 liter.
3. Measure the number, N, of cubic centimeters of insoluble essential oil.
4. Then operate on the alcoholic liquors as has been said under A; then a number, *n*, of cubic centimeters of acetate will be obtained for the essential oil dissolved.

The percentage will be the sum of the two numbers N plus (*n* times 0.8)

CH. BARDY,
Director of the Central Laboratory of the Administration of Indirect Contribution.
BÉRARD,
Secretary of the Consultative Committee of Arts and Manufactures.

A true copy:

E. ROUME,
Director of Foreign Commerce.

ANNEX B.

TESTING FOR PERCENTAGE OF VINOUS ALCOHOL IN ESSENTIAL OIL.

1. Put 500 cubic centimeters of essential oil in a decanting funnel holding 1 liter.
2. Add 150 cubic centimeters of salt water; shake vigorously, and decant this water into a funnel provided with a stopcock and holding 1 liter. Do this three times and gather up all the rinsing water.
3. Shake with 125 cubic centimeters of carbon sulphide, and repeat this treatment four times, in order to eliminate from the liquid the butylic and amylic alcohol that may be in solution.
4. The carbon sulphide having been separated after every emptying, filter the aqueous solution through a wet filter; then introduce it in a balloon containing 1 liter.
5. Distill the liquid and collect 250 cubic centimeters.
6. Take the degree of the alcoholometer and the temperature, reduce it to 15° by means of the correction table, and divide by 2 to obtain the percentage in alcohol.

This number is to be corrected, if need be, by the contents in propylic alcohol, the testing for which is to be performed as set forth in the instructions for vinous alcohol.

CH. BARDY,
Director of the Central Laboratory of the Administration of Indirect Contribution.
BÉRARD,
Secretary of the Consultative Committee of Arts and Manufactures.

A true copy:

E. ROUME,
Director of Foreign Commerce.

ANNEX C.

VOLUMETRIC TESTING FOR PERCENTAGE OF ACETONE IN THE METHYLENE.

The test requires the preparation of the following liquids:

ONE-FIFTH NORMAL SOLUTION OF IODINE.

Weigh exactly 127 grams of pure bisublime of iodine and dissolve with 250 grams of potassium iodide in distilled water; bring up the solution to the volume of 5 liters at 15°.

ONE-TWENTIETH NORMAL SOLUTION OF HYPOSULPHITE OF SODA.

Dissolve 62.025 grams of pure hyposulphite of soda dried in the air in distilled water; bring the solution to the volume of 5 liters at 15° after adding 15 cubic centimeters of soda.

SOLUTION OF SULPHURIC ACID.

A liquid containing 100 grams of pure sulphuric acid per liter.

SOLUTION OF SODA.

A liquid containing about 80 grams of soda (NaOH) per liter.

STARCH.

Dilute 5 grams of starch in 500 cubic centimeters of distilled water; boil for about an hour, then bring up to 1 liter with salt water.

METHOD OF TESTING.

1. Measure exactly 20 cubic centimeters of methylene; pour into a balloon holding 1½ liters filled with distilled water; bring up to 1 liter with water; then shake vigorously in order to render it homogeneous.
2. Introduce 30 cubic centimeters of soda in a flask holding 250 cubic centimeters used for assaying silver.
3. Add 20 cubic centimeters of the diluted solution of methylene.
4. Pour in N cubic centimeters of the iodine solution (about 55 cubic centimeters); allow it to react for at least 10 minutes while shaking it.
5. Pour in at least 30 cubic centimeters of sulphuric liquid so as to render the liquid acid.

6. Then allow the hyposulphite liquid to drop until the discoloration is almost complete; at that moment add 4 to 5 cubic centimeters of starch, and continue to pour in the hyposulphite solution until the discoloration is complete.

Note the number of cubic centimeters used and call the number n; find its value in cubic centimeters of iodine (the solution of hyposulphite being four times weaker than that of iodine it will be convenient, to arrive at the equivalent, to divide the number n by 4).

7. Subtract this number, n divided by 4, from the number n expressing the cubic centimeters of iodine used, and multiply the difference by 0.6073.

The formula $\left(N - \frac{n}{4}\right) \times 0.6073$ gives the percentage of the quantity of acetone contained in the methylene.

In order that the test may be as accurate as desired, it is necessary that $\frac{n}{4}$ shall be equal at least to 10 cubic centimeters of iodine liquid.

Example:

$$N = 49.55^{cc}$$
$$n = 41.8^{cc}$$
$$\frac{n}{4} = 10.45^{cc}$$
$$N - \frac{n}{4} = 49.55^{cc} - 10.45 = 39.10^{cc}$$
$$39.10 \times 0.6073 = 23.74 \text{ per cent of acetone.}$$

NOTE.—If an original test made with the soda indicated that this soda contained nitrite, it would be necessary in the test to take account of the correction due to the presence of these nitrites.

BARDY,
Director of the Central Laboratory of the Administration of Indirect Contribution.

BÉRARD,
Secretary of the Consultative Committee of Arts and Manufactures.

A true copy:

E. ROUME,
Director of Foreign Commerce.

ANNEX D.

VOLUMETRIC TEST FOR ACETONE IN METHYLATED ALCOHOL.

1. Take exactly 50 cubic centimeters of methylated alcohol by means of a pipette having two marks.

2. Let it drop into a balloon, holding 500 cubic centimeters, half filled with distilled water.

3. Fill it up to the mark by the addition of distilled water, then shake it to render it homogeneous.

4. Take out 20 cubic centimeters of this solution and let it drop into a flask holding 750 cubic centimeters stopped with a ground glass stopper, in which 25 cubic centimeters of solution of soda at 80 grams per liter have previously been put.

5. Then add 250 cubic centimeters of distilled water, then N cubic centimeters of one-fifth normal iodine (about 45 cubic centimeters), and shake.

6. Let it react during 15 minutes at least and during twenty minutes at most at a temperature comprised between 15° and 20° C; render it acid by the addition of 25 cubic centimeters of sulphuric acid at 100 grams per liter.

7. Pour the one-twentieth normal hyposulphite solution until the discoloration is almost complete; add some cubic centimeters of starch and complete the discoloration.

8. Notice the number, n, of cubic centimeters used.

9. Divide this number, n, by 4, to get the value in cubic centimeters of iodine not used (this number, $\frac{n}{4}$, always means at least equal to 10 cubic centimeters).

10. Deduct the quotient found from the number N, multiply this difference by 0.12146 to get the percentage of acetone in volume in the alcohol tested.

$$\left(N - \frac{n}{4}\right) \times 0.12146 = \text{percentage of acetone.}$$

$$N = 44.1^{cc}$$

$$n = 44.4^{cc}$$

$$N - \frac{n}{4} = 44.1^{cc} - \frac{4444}{4}^{cc} = 33^{cc}$$

$$33^{cc} \times 0.12146 = 4 \text{ percentage of acetone.}$$

CH. BARDY,
Director of the Central Laboratory of the Administration of Indirect Contribution.
BÉRARD,
Secretary of the Consultative Committee of Arts and Manufactures.

A true copy:

E. ROUME,
Director of Foreign Commerce.

ANNEX E.

TESTING FOR PERCENTAGE OF METHYLIC IMPURITIES IN THE COMMERCIAL METHYLENE (BARILLOTT PROCESS).

INSTRUMENTS NECESSARY.

Rose tube, the lower part of which is gauged at 50 cubic centimeters and the upper bowl of which contains about 200 cubic centimeters.

The stem uniting these two parts divided into cubic centimeters and tenths, from 50 to 55 cubic centimeters.

MODE OF OPERATION.

1. Measure very exactly at the temperature of 15° a volume of 50 cubic centimeters of pure chloroform by means of a pipette with two marks and provided with a stopcock. Introduce this chloroform in the rose tube.

2. Prepare, on the other hand, the following mixture:

Twenty-five cubic centimeters of methylene.

Thirty-eight cubic centimeters of bisulphite of soda of 1.35 density.

Twelve cubic centimeters of water.

Cool this mixture down to 15°, then pour it into the tube closed by means of the ground-glass stopper; turn the apparatus upside down and shake it vigorously; let it rest, and read the increase of the layer of chloroform at the temperature of 15°.

3. Multiply this number by 4 to express the value of the methylic impurities for 100 parts of methylene.

The quantity of these impurities estimated by the above method must be at least 5 per cent.

These impurities must be entirely due to the two products of wood distillation; any other material, of whatever nature, added to the methylene for the purpose of falsifying the indications of chloroform will entail the rejection of the methylene.

CH. BARDY,
Director of the Central Laboratory of the Administration of Indirect Contribution.
BÉRARD,
Secretary of the Consultative Committee of Arts and Manufactures.

A true copy:

E. ROUME,
Director of Foreign Commerce.

GENERAL DIRECTION OF INDIRECT REVENUES.

[Circular of June 23, 1882, No. 337—Third Division, First Bureau.]

METHYLATED ALCOHOLS, METHYLENES, TRANSPARENT SOAPS, CHLOROFORM, CHLORAL, AND COLLODION.

Publication of divers decisions of the committee of arts and manufacture.—Recommendations to the officials.

The advisory committee of arts and manufactures which, by virtue of article 5 of the law of April 2, 1872, has been appointed to fix for each branch of industry the conditions upon which the methylation of alcohol shall be operated, has in a general manner admitted the methylene or wood spirit as methylating agent.

Adoption of a new type of methylene.

The methylene employed for the methylation of alcohol shall be conformable to a determined type.

According to the terms of a decision by the committee, bearing date of February 12, 1879, the regulation wood spirit should mark at least 90 alcoholometric degrees and contain at most 40 per cent of methylic alcohol, the surplus being composed of impure substances, such as acetone, acetate of methyl, methylacetal, aldehyde, methylamine, phenol, etc. As the employment of a methylene containing so strong a portion of impure matters has excited reclamations, the administration has been led to discover whether it would not be possible to authorize the manufacturers to make use of a wood spirit which, though ever so little charged with tarry substances, would present sufficient guarantees from the point of view of the methylation of wine alcohol. In conformity to the opinion which it has expressed in this regard, the committee of arts and manufactures has, in its session of May 11, 1881, decided that in the future methylenes destined for the methylation of wine alcohol shall mark 90 alcoholometric degrees at least, con-

tain at most 65 per cent of pure methylic alcohol, and at least 35 per cent of foreign substances, among which acetone figures at about 20 to 25 per cent.

As this decision interests all the manufacturers who are authorized to methylate alcohol under the benefit of moderation of the tax sanctioned by the law of August 2, 1872, the officials ought to bring it to their knowledge.

The central laboratory of the administration has prepared samples of the new type of methylene. The directors shall immediately apply for them from the first office of the third division, a sufficient number, in order to secure the necessary supplies for their department. One sample will be deposited in each post of excise where alcohol is methylated. These samples will be protected against air and light. They shall be renewed at least once every year, and oftener when the bottles containing them have frequently been opened. A sample of the type shall likewise be sent to each methylator and to each manufacturer of methylene.

I have had printed abstracts of a notice written by Mr. Bardy, director of the central laboratory, and treating of the assay of commercial methylenes destined for the methylation of wine spirits. The question is not about a process of analysis which in an exact manner gives the tenor of methylenes in pure methylic alcohol, but rather about a method which easily permits one to know whether the methylenes approach sufficiently the regulation type.

This notice contains very useful indications for the manufacturers who may themselves wish to make the assay of wood spirits which they intend to present as methylating agents. The officials will communicate the abstracts hereto annexed to the methylators and to the manufacturers or depositors of methylenes.

As in the past, the methylenes may not be applied to the methylation of alcohols except after having been previously approved by the administration.

Recommendations relative to the previously taking away of samples of methylene.

The previously taking away and the sending of samples will thus continue to be performed under the present conditions.

The administration has recently caused to be taken from divers methylators a certain number of samples from methylenes received in carboys sealed with lead. The analysis has evidenced that the wood spirit of which several of these samples consisted was not a good methylene. Yet, from the moment that the carboys had been sealed with lead they ought to have contained nothing but methylene, previously approved by the central laboratory. Therefore, there must have taken place a substitution of methylene, either by the manufacturer or merchant, between the first taking of samples and the putting under lead, or by the methylator on the carboys sealed with lead.

Such facts demonstrate that the sealing with lead is not always carefully attended to by the officials.

On the other hand, attentive verifications have permitted one to recognize that even on carboys conveniently sealed with lead substitutions have been effected by the

aid of an opening made in the stopper and deftly hidden by a wood or cork faucet. To frustrate every maneuver the administration has decided that in the future the neck of every carboy be clothed with a metal capsule at the expense of the tradesman. Then the sealing with lead shall be effected as Circular No. 314 prescribes, the ends of the cord shall be crossed and knotted on the upper part of the capsule, and the lead shall be fixed in such a manner that one can not lift the capsule without breaking the cord. The directors and subdirectors will watch over it that this operation be performed with the care required. The administration would find itself obliged to severely proceed against any agent who should be convicted of negligence in this respect.

I recall that, according to article 2 of the regulation of January 29, 1881, the methylating substances, instantly after the taking of samples, shall be locked up in a locality previously agreed upon by the administration, under the double key of the tradesman and of the officials. By Circular No. 314 of April 30, 1881, the administration has admitted that in default of this special locality the methylators could lock the methylenes in glass, sealed by means of the seal of the administration; but it would not hesitate to withdraw this concession if proof should be obtained that the tradesmen have abused it. The taking of samples from carboys otherwise is not authorized except by the methylators, and is prohibited with the manufacturers, merchants, or depositors of methylenes. When these latter tradesmen desire to have analyzed in advance the wood spirits intended for sale they shall necessarily include them in a reservoir provided with two padlocks. After the publication of the result of the analysis the methylene, in the presence of the officials, may be transfused into glass carboys, which afterwards are sealed with lead by the administration. If the manufacturer, merchant, or depositor desires to perform the transfusion before publication of the result of the analysis, he could not be allowed to do so except upon condition that he place the carboys under double key.

Padlocks for the locking of receivers or of localities containing the methylene.

The administration has ordered the manufacture of a double series of padlocks with different locking arrangements for the locking of receivers or of places containing the methylenes destined for the methylation of alcohols.

These new padlocks, which will be furnished free of charge, shall immediately be substituted for those which are in actual use. The two padlocks applied to each locality or receiver, be it well understood, shall belong to two distinct series. The principal recipients are invited to direct, under the address of the fourth division, second office, the applications necessary for the demands of their district.

Up to the present time the alcohol employed for the manufacture of transparent soaps, of chloroform, of chloral, and of collodion has not been admitted to the benefit of tax moderation. By reason of the mode of the manufacture of these articles and of the uses to which they are destined, the administration has thought that there was

room for making application of the dispositions of the law of August 2, 1872, and it has submitted anew the question to the committee, who, in its session of November 2, 1881, has published the following report:

Decision admitting the transparent soaps, chloroform, chloral, and collodium to the benefit of tax moderation.

1. The manufacturers of transparent soaps may be authorized to employ, under the tax reduction, the alcohol necessary for their manufacture, upon condition that this alcohol be methylated by the addition of one-ninth part of methylene and be employed in the establishment itself.

2. The manufacturers of chloroform may be authorized to employ, under tax reduction, the alcohol necessary for their manufacture, upon condition that this alcohol be methylated by the addition of one-ninth part of methylene and be employed in the establishment itself.

3. The manufacturers of chloral may be authorized to employ, under tax reduction, the alcohol necessary for their manufacture, upon condition that they show for each liter of alcohol of 95° a quantity of chloral hydrate which may not be less than 780 grams.

4. The manufacturers of collodion may be authorized to employ, under tax reduction, the alcohol necessary for their manufacture, upon the condition that they show for each liter of alcohol of 95° a quantity of collodion which may not be less than 2 liters; this collodion, besides that, to contain at most one part of alcohol for one part of ether, and to hold in solution from 12 to 15 grams of pyroxyline per liter.

The decision of the committee shall be brought to the knowledge of the manufacturers. The officials shall watch over it that the conditions to which the moderation of tax is subjected be exactly observed. They will remark that the manufacturers of transparent soaps and of chloroform are entitled to methylate the alcohol, under reduction of the revenue, merely under the reservation that the alcohol will be employed in the establishment itself. They will, therefore, not confine themselves to assisting at the mixture of the alcohol and of the methylene. They shall insist that the methylated alcohol be utilized under their very eyes for the manufacture of transparent soaps or of chloroform; not any quantity of it shall be allowed to be carried outside of the factory.

As far as concerns the alcohol employed for the manufacture of chloral and of collodion, the methylation results from the manufacture itself. It is, therefore, indispensable not merely that the agents of the indirect revenues be present at the beginning of the operation, but also that they follow the different phases of the manufacture up to the moment where the transformation of the alcohol is complete, or at least so far advanced that its revivification is impossible. Besides that, the manufacturers of chloral and of collodion will be required to serve with the greatest exactness and to keep constantly in use the manufacture register No. 20 F, the keeping of which is prescribed by article 5 of the regulation of January 29, 1881, this register affording control for the officials.

According to the decision of the committee, the manufacture of chloral and of collodion, in order to confer a right upon the moderation of the tax on alcohol, shall be accomplished upon the following conditions:

1. Manufacture of Chloral and its Hydrate.

Let pass over the alcohol a current of chloral gas, which from the first moments determines the formation of numer-

ous products by which the production of chloral is accompanied—aldehyde, chlorhydric acid, chlorhydric ether, etc.

2. MANUFACTURE OF COLLODION.

Mix the alcohol with its weight of ether; add to the mixture the pyroxyl, and, in cases where the employment of the collodion shall be immediate, the iodides, bromides, etc., which are to transform it into a commercial article.

Also, as a result from Circular No. 223, of November 2, 1877, the transparent soaps, chloral, and chloroform were exempted from the right of entry, even when the alcohol employed for their manufacture had not been admitted to the benefit of the right of methylation; this alcohol being completely transformed or disappearing in the course of the operation, these articles could not be subjected to the octroi duty except when designated in the tariff by name. With stronger reason, the same exemption from duty shall be given to them at the present time, as far as it relates to the entry duty, and the former situation is maintained from the point of view of the octroi duty. These rules are extended to the collodion, in the manufacture of which the alcohol may be considered as methylated by the very fact of the manufacturing.

At all times the products on the basis of alcohol imported from foreign countries have had to pay, at their entrance into France, the internal revenue on the quantity of alcohol employed in their manufacture. This principle has been sanctioned by an express provision of the law of May 7, 1881, bearing promulgation of the new general customs tariff, which is couched in the following words:

> The products into the composition or manufacture of which alcohol enters will have to pay, independently of the customs duty which concerns them, the internal revenue on alcohol employed, and according to the bases which will be determined by the advisory committee of arts and manufactures.

By virtue of preceding decisions of the committee, the proportion of alcohol impassable in the imported transparent soaps, chloroforms, chloral, and collodion, has been fixed as follows:

Transparent soaps.—Thirty centiliters alcohol per kilogram. (Decision of July 23, 1873; circular letter of January 23, 1874.)

Chloroform.—Two liters alcohol per kilogram. (Decision of September 18, 1867; circular letter of March 27, 1868.)

Chloral and *chloral hydrate.*—Two liters alcohol per kilogram. (Decision of July 10, 1872; circular letters of October 30, 1872, and of February 4, 1873.)

Collodion.—Two liters alcohol per kilogram. (Decision of February 21, 1866; circular letter of June 15, 1866.)

The quota relating to transparent soaps and chloroform has not been modified. Those referring to chloral, to chloral hydrate, and to collodion have been placed in harmony with the medium quota resulting from the processes of manufacture of similar French products. In its session of April 5, 1882, the advisory committee of arts and manufactures decided that in the future the internal revenue on

imported chloral, chloral hydrate, and collodion should be collected upon the following bases, viz:

Chloral and *chloral hydrate.*—One liter and 22 centiliters of pure alcohol per kilogram.

Collodion.—One liter and 19 centiliters of pure alcohol per liter of collodion.

Corresponding with all imported products based on alcohol, the internal revenue relatively due on transparent soaps, on chloroform, on chloral, and on collodion continues to be the general consumption tax.

List No. 20 D.

In order to follow in a close and constant manner the use of methylated alcohols, the administration decides that at the expiration of the second period of three months of the current year the list No. 20 D be furnished in a double issue, and that one of these issues be sent to the directors, accompanied with the observations which the examination of the operations accomplished during said period of three months will have suggested. At the time of the second edition, a special column will be opened, after the model No. 20 D. Provisorily, the administration will deposit its observations on a sheet of paper, which it will annex to the issue remitted to the departments.

F. RENAUD,
Director-General.

A compared copy:

CROZES,
Chief of the Office in charge of the Third Division.

Notice concerning the assay of commercial methylenes destined for the methylation of wine alcohol.

[Extract.]

* * * * *

There are precise scientific methods in possession that permit one to accurately ascertain the quantity of pure methylic alcohol contained in the commercial methylenes. Nothing is, therefore, easier than to know whether a methylene presented for methylation satisfies the conditions required by the advisory committee. It must, however, be known that these methods can not be put into practice but by experienced chemists. They require the employment of a fragile apparatus, are relatively costly, and (a more serious circumstance) they necessitate considerable time.

There was, therefore, a real interest to find out a method simple, expedient, easy to be operated by persons little familiar with the delicate chemical reactions, permitting, in a word, the superintendent charged with the manufacture of the methylene to follow, step by step, the progress of his distilling apparatuses, and the tradesmen to know whether a methylene, offered him, will be accepted or refused by the administration. The problem so put already presents great difficulties; but these difficulties still increase if it is proposed to push the investigations further and to find out whether the wine alcohol methylated by an addi-

tion of methylene really contains the requisite proportion of this product, and whether, beside that, the methylene which has served at the methylation has well fulfilled the conditions required by the advisory committee.

None of the methods proposed up to date solve this difficult question.

Our researches having shown us that the methylenes appropriate for methylation contain, besides methylic alcohol, but little water and acetone, accompanied by a slight quantity of acetate of methyl, methylacetal aldehyde, methylamine, phenol, etc., we have thought of learning the value of a methylene no longer by its real tenor of methylic alcohol, but rather by the presence, more or less large, of the principal impurity—one might almost say of the sole impurity it contains—of acetone.

* * * * *

Inspired by the works of Dr. Guenning and of Mr. Kraemer, we have succeeded in finding a method as simple as it is expedient.

It rests on the immediate transformation of the acetone into iodoform by the aid of a lye of caustic soda and of a solution of iodine in iodure of potassium. In order to facilitate the employment of the method, we have done away with the weighing of the iodoform produced, and we operate by a comparison with the liquid types of known richness.

In the practice, two cases may present themselves—

(*a*) To learn whether a methylene sufficiently approaches the type adopted by the advisory committee and can, consequently, be admitted as an efficient agent for methylation.

(*b*) To examine an alcohol previously methylated and to find out whether it really contains the regulation proportion of methylene of the admitted type.

We will successively study these two cases. Whatever may be the end which we propose to attain, the reactives and the material employed are the same.

We commence by preparing the following two solutions:

A. Lye of pure caustic soda containing two equivalents of soda per liter. This solution marks 1,080 in the densimeter.

B. A solution of iodine in iodure of potassium in the proportions of 254 grams of iodine for 385 grams of iodure of potassium in a quantity of water sufficient for obtaining the volume of 1 liter.

The material consists of—

Pipettes of 5 and of 10 cubic centimeters.

Gauged balloons of 50 and of 100 cubic centimeters.

Gauged decanter of 1 liter.

Tubes stopped at one extremity, bearing three strokes of gauge—5, 15, and 30 cubic centimeters.

1. Assay of a Commercial Methylene.

Take, with the aid of a pipette, 5 cubic centimeters of methylene to be assayed and introduce it into a balloon of 50 cubic centimeters, filling immediately with water up to its stroke of gauge. Stop the balloon with the finger and

agitate the mixture vigorously. This done, take away with a pipette 10 cubic centimeters of this liquor, and let run into a decanter of 1 liter. Fill this vessel with pure water up to the stroke of the gauge. Stop the decanter with the palm of the hand and agitate it vigorously.

This leaves a solution of methylene of one one-thousandth.

To make the assay, take 5 cubic centimeters of this liquor and pour into the stoppered tube;[1] add of the solution of soda, A, up to the stroke marked 15 cubic centimeters; then introduce a one-half cubic centimeter of the solution of iodine, B. Stop the tube with the finger, and turn it over once in order to mix the liquids. Instantaneously a milky turbidity is produced, due to the formation of the iodoform. Thereupon fill the tube with water up to the stroke marked 30 cubic centimeters. Agitate gently, overturning the tube once, and proceed to the comparison with a similar tube prepared under the conditions identical to the methylene type.

In operating with these precautions, the iodoform precipitates in the state of extreme division and remains emulsioned in the liquid. This condition permits a very easy comparison. It is in order to avoid the agglomeration of the iodoform that we recommend not to agitate the tubes more than is strictly necessary to effectuate the mixture and to produce the homogeneousness of the liquid.

To facilitate the comparison, we resort to a little trick. Place behind the tubes to be examined a white card on which strokes of different thickness are traced, ranging in the order of their decrease in density, and examine whether there can be observed the same number of stripes in each of the tubes.

Three cases may present themselves:

1. The turbidity is much less abundant than that produced by the methylene type.
2. The turbidity is sensibly like the type, or slightly weaker.
3. The turbidity is manifestly stronger.

In the first case, the methylene does not contain the intended proportion of acetone; it is too rich in methylic alcohol and can not be accepted for the methylation.

In the second case, it approaches much the type, and the precise dosage of the methylic alcohol becomes necessary in order to know whether it should be admitted or rejected as a methylating agent. In this case the dosage is made by the process of Ch. Bardy and L. Bordet.

Lastly (the third case), it can be admitted without resorting to the dosage of the methylitic alcohol. The assay loses all its value when one abandons the tube to rest. The iodoform agglomerates and deposes itself to the bottom of the tube; therefore the comparison with the type must be made immediately.

[1] This taking of the assay shall be done with a graduated pipette, and not by pouring the liquid directly into the tube till up to the stroke marked 5. This feature has been indicated only for the purpose of avoiding the errors due to the employment of a pipette of 10 centimeters instead of a pipette of 5 centimeters.

The wine alcohol or the pure methylic alcohol does not, under these conditions, furnish any trace of iodoform; even after a prolonged contact the solutions remain perfectly limpid.

This process would prove a failure should the assayed methylene show a very strong quantity of aldehyde. When one suspects that this is so, a preliminary assay becomes necessary. Proceed in the following manner:

Commence by diluting with water the methylene in the proportion of 1 part of methylene and 10 parts of water; then take 5 cubic centimeters of the liquor thus extended and add thereto 2 cubic centimeters of a watery solution of fuchsine of 0.20 grams per liter, discolored by bisulphite of soda. At the expiration of some minutes, observe a rose-violet coloration if the methylene contains aldehyde, and this coloration is the more intense as the aldehyde exists in a stronger proportion.

If the presence of aldehyde is observed, proceed to its elimination before making the assay by iodoform. For this, distill 5 cubic centimeters of methylene additioned by 7 cubic centimeters of sulphuric acid and 10 cubic centimeters of water. Collect the vapors into the balloon of 50 cubic centimeters into which a little water has been put, and when the distillation is finished, continue the assay in the ordinary manner. In making the assay of commercial methylene, be certain that it does not contain wine alcohol introduced either by accident or by fraud.

Finally, the methylenes presented for methylation shall be free of methylic ethers—at least contain but very slight quantities of them. Ascertain the quantity of these ethers, if there be any, by saponifying them with a determined quantity of titrated caustic soda. The quantity of soda disappearing in the assay will give the calculation of the tenor of ethers.

* * * * *

To avoid any arbitrary measure or any erroneous appreciation, it is convenient, every time that the assay does not class frankly the methylene either above or below the type, to resort to the dosage (ascertainment of the quantity) of the methylic alcohol by the method of Ch. Bardy and L. Bordet.

2. Assay of Methylated Alcohols.

It is convenient to distinguish three cases—

(*a*) Alcohols methylated by methylene alone.

(*b*) Alcohols methylated by an addition of methylene and essences.

(*c*) Varnishes manufactured with methylated alcohol.

(*a*) *Alcohols methylated with methylene alone.*

Take 10 cubic centimeters of the product, and introduce directly into the gauged decanter of 1 liter; fill this decanter with water; agitate carefully, and proceed to the assay in the same manner as if it were methylene. The comparison is made with alcohol methylated by the methylene of the type employed in the regulation proportion—a ninth or a fifth part of the volume, according to the adopted formula

(b) Alcohols methylated by an addition of methylene and essences.

Take thereof 11 cubic centimeters and proceed to the assay as in the preceding case, taking care each time to previously filter the liquid through a moistened filter, in order to separate the precipitated essences.

(c) Assay of varnishes manufactured with methylated alcohol.

Take 11 cubic centimeters of varnish and distill dry in a small bulb, collecting the vapors into a bulb of 100 cubic centimeters, containing water. When the distillation is finished, pour the contents of the bulb into a gauged decanter of 1 liter and terminate the assay as above.

If there be doubts concerning the genuineness of the methylation of an alcohol or of a varnish, the assay by iodoform shall be controlled by the analysis and the dosage of the methylic alcohol, because the methylated wine alcohol shall contain not merely a certain quantity of acetone, but also a determined proportion of methylic alcohol.

This analysis is done by the method published by Messrs. Riche and Bardy.

To sum up, though the new method which we propose can not be stated as furnishing results of absolute exactitude, yet it is of a character simple enough and quick enough to be daily utilized in commercial transactions. It can furnish to the experts charged with the delicate mission of appraising the value of a methylic alcohol (in regard to its adoption or rejection as an agent for methylation) sufficient elements of investigation to permit them, almost in the generality of cases, to formulate an opinion without having to resort to the minute method of dosage of methylic alcohol by the transformation into iodure of methyl.

GENERAL DIRECTION OF INDIRECT CONTRIBUTION.

[Circular No. 314, of April 30, 1881—Third Division, First Bureau.]

METHYLATED ALCOHOL.

Notice of regulation of public administration of January 29, 1881.

The law of August 2, 1872, which has been notified to the service by Circular No. 67, of September 19 following, decrees (art. 4) that alcohol methylated in such way as to be unsuitable as a beverage shall be subject everywhere to a special tax, called the methylation tax, of 30 francs per hectoliter of pure alcohol. The same law (art. 5) charges the consultative committee of arts and manufactures with the duty of determining for every branch of industry the conditions under which the methylation of alcohol is to be effected. Finally, article 3 of the law of finances of March 21, 1874, authorized the Government to issue, by the way of regulation of public administration, the measures to be taken to assure the collection of the tax from the methylators.

It is in virtue of this last-mentioned law that the decree of January 29, 1881, has been rendered, the text of which is reproduced farther on, and which it is the object of the present circular to put into execution.

Historical.—Different kinds of management to which the methylation of alcohol destined for industrial uses has been successively subjected.

Under the sway of the law of December 8, 1814 (art. 80), the spirituous liquors employed for industrial uses were exempted from all tax on condition that they should be methylated in the presence of an agent of the service. The law of April 28, 1816, did not grant this franchise, but the minister of finances, by a decision November 29, 1816, ordered its maintenance.

Long experience proved that the revenue service was powerless to prevent or repress abuses. In consequence, a ministerial decision of October 10, 1833, revoked that of November, 1816, and thenceforward the alcohols employed in industry were once more subjected to the same taxes as alcohols used as beverages.

The law of July 24, 1843, revised while restricting the principle contained in the law of December 8, 1814. It did not grant to methylated alcohols absolute freedom from tax; it merely ordered that they should be subjected to a reduced tax. The ordinance of June 14, 1844, determined the rate of taxation and, furthermore, regulated the condition to which the methylation of alcohols was subjected.

Under the terms of that ordinance, which has been commented on by Circular No. 303, of July 16, 1844, the alcohols were to be methylated, whatever might be their further employment, by the addition in variable proportions of certain essential oil (essences of wood tar, of coal tar, of turpentine, of rock oil, of naphtha oil, etc.); the amount of imposts varied according to the proportion of the essences and according to the proportion of the places where the methylated alcohols were utilized; the sale of these mixtures of alcohol and essences was subjected to no restriction, and its circulation was simply subject to the compliance with the general formalities relating to the transportation of spirits and ordinary brandies.

Under this system the employees had no legal means of controlling the further use of the alcohol which had been methylated in their presence; on the other hand, the process of methylation involving an obligatory addition of essential oils, certain manufacturers had not been able to adopt this process and were, in fact, excluded from the benefits of the reduced tax.

The consumption tax on alcohols having, in 1871, been raised from 75 to 125 francs in principal, caused the inconveniences and dangers of this system to be more seriously felt. On the one hand, fraud, stimulated by the increase of tax, might be tempted to abuse those simple mixtures of spirits and essential oils which it was so easy to restore to their previous condition and which circulated without control in any quantity and for any purpose; on the other hand, the exclusion which, as a matter of fact, befell some manufacturers had become still more prejudicial to them than before. To give to the treasury the indispensable guaranty in reserving exclusively to manufacturers, commonly so called,

the right to methylate alcohol, and at the same time to grant to these manufacturers greater facilities for being admitted to the benefit of the reduced tax, such was the double object of the law of August 2, 1872; such was also the idea which guided the elaboration of the regulation of public administration of January 29, 1881.

I will analyze in succession the divers articles of these regulations and set forth in what spirit the revenue service should interpret and apply them.

The present management of methylation of alcohol involves at once technical and purely administrative methods.

The technical arrangements are those which refer to the processes of methylation, to the choice of methylating substances, and to the special condition of manufacture imposed on certain manufacturers, etc. The administrative arrangements are those which concern solely the superintendence and control which the employees have to exercise in the interest of the tax over the various operations of methylation. The decree of January 29, 1881, did not and could not have for its object anything else than to regulate the administrative measures—that is to say, to determine the condition under which the service is to act. As regards the technical arrangement, they belong exclusively to the consultative committee of arts and manufactures, which passes enactments in this respect by virtue of an express delegation of authority from the legislative power, and the decisions of which, accordingly, have by themselves the force of law. The administration contents itself with ordering and superintending the execution of these decisions.

Since the law of 1872 became operative the committee has pronounced its decisions in regard to a great number of industries. Following the present circular will be found the text of the decisions on principles which have been rendered by the committee up to the present day. The new decisions which it may see fit to issue in the future will be successively notified to the service, but these decisions will not modify the general arrangement of the regulation of January 29, 1881.

Analysis of articles.

Article 1.—Application for authorization to be handed in by manufacturers.

Article 1 imposes on manufacturers who wish to profit by the terms of the law of August 2, 1872, the obligation of applying in writing, specifying—

1. The mode of employment of the alcohols, and the process proposed for methylating them.

2. The nature and kind of products to be manufactured, and their industrial uses.

3. The quantity of alcohol necessary for manufacture.

These applications, written on stamped paper conformably to the statute of the law of 13th Brumaire of the year VII, shall be addressed to the administration, which reserves the right to decide, no matter what may be the industry exercised by the petitioner, and even if the committee has already made known the process of methylation applicable to that industry. It is important that the statement of the application be very precise and very clear, especially as concerns the nature, the species of product to be manufactured, and the industrial applications of those

products. The service will subject the application beforehand to an examination, which shall be made with accuracy in order that its result may furnish either to the committee or to the administration the element necessary for its complete formation.

It will not be necessary to require a new application of manufacturers who are already authorized to methylate alcohol. The directors will confine themselves to transmitting to the administration before the 20th of May next a list of names of these methylators, which list shall be drawn up conformably to the model printed after the present circular.

The manufacturers who wish to profit by the reduction of tax on alcohols which they put on the market are obliged under the terms of the regulation to prove that they are enrolled among the patents for an industry the product of which involves the employment of alcohol.

This arrangement enters absolutely into the spirit of the new legislation, which, as has been explained above, is understood to grant to none but manufacturers the benefits of the reduction of tax on methylated alcohol. It should, however, not be interpreted in too absolute and restrictive a sense. One may foresee that persons not exercising any industry properly so called, and thus not subjected to any patent, may have to employ alcohol accidentally for operations having an industrial or scientific character. It would be too rigorous to refuse to them, a priori, for that reason the benefit of methylation. Similarly, the lack of a patent will not necessarily be a motive of exclusion in regard to certain scientific establishments which use alcohols for their works. These special cases will always be subject to the administration, who will determine the special disposition to be made in these cases in regard to the methylation of alcohol.

License

The methylator must be provided with a distiller's or wholesale merchant's license accordingly as he himself produces or receives, with the credit of the general consumption tax, the alcohols which he methylates. On this point the regulations make no innovation; they merely give the methylators of alcohol to understand the general rule which subjects to license any manufacturer who holds, under any title whatever, spirituous liquors on which the general consumption tax has not been paid in cash. Nevertheless, the decree of January 29, 1881, maintains and reaffirms the exception which the circular, No. 67, of September 19, 1872, had authorized for the benefit of manufacturers who do not demand the credit of taxes either on the alcohol which they receive or on the product of their manufacture. These methylators continue to be free from the payment of a license, but they are obliged, under the terms of the new regulations, to methylate their alcohols within the space of ten days, beginning from the moment when they have received them, and to pay the tax immediately after the methylation. The collection is then made in a special register, No. 9.

The space of ten days is calculated in towns subject to local taxes, beginning from the moment of the delivery of the permit for transit;[1] in towns not subject to local taxes and in the country, beginning from the expiration of the time of transportation.

The permits exhibited in the regulation period of time by the methylators who absolutely renounce the credit of the tax shall be discharged by virtue of act of methylation only after the payment of the tax of 37 francs and 50 centimes. On the other hand, if the methylation of the alcohol has not been effected in the space of time prescribed it can not be effected afterwards except on special authorization of the director or subdirector. If for serious reasons the authority for delayed methylation is not granted, the service would refuse the discharge of the permit, and the double consumption tax would become payable without prejudice to penalties enacted by article 1 of the law of February 28, 1872.

These refusals shall be at once notified to the administration.

Manufacturers possessing licenses as wholesale merchants do not have to pay a second license in their capacity as methylators.

Distillers and simple rectifiers who merely methylate alcohol arising from their production similarly have only to pay the distiller's license, but those who make the operation of methylation bear on alcohols drawn from without, and who claim the credit of the duty either for these alcohols themselves or for the product for methylation, will be obliged to provide themselves both with the distiller's license and with the wholesale merchant's license.

The manufacturer provided with a license, if under the conditions which have been indicated, is authorized to place himself under bond both for the natural alcohol and for the methylated alcohol. The circular, No. 67, cited above, ordered that none but manufacturers who export a notable quantity of their product could obtain the credit of the methylation tax. The decree of January 29 annuls this order, which for the rest has already been revoked by the common letters of October 20 and November 5, 1874.

Some of the manufacturers who methylate alcohols as they receive them, and who, therefore, are not bound to have the license as bonders of natural alcohol, will perhaps claim the benefit of the bond for the methylated alcohol. These manufacturers will be bound to pay the license of a wholesale manufacturer. In fact, it is the general rule, with some rare exceptions formally stipulated in the law itself, that all persons liable to tax who desire to obtain the credit of the tax shall first provide themselves with a license.

Article 2.—Declaration to be made before every operation of methylation.

The methylators of alcohol shall, as in the past, make a declaration before every one of their operations. Article 2

[1] The auditing of the permit for transit delivered under these conditions shall be conditional on the actual methylation of the alcohol in the space of ten days.

of the regulation sets forth the indication which this declaration is to contain. It shall show—

1. The kind, quantity, and degree of the spirits to be methylated.

2. The nature of the product to be manufactured.

3. The kind and quantity of the methylating substances.

These declarations, which have thus far been made at the receiver's office nearest to the residence of the methylator, will hereafter be received only at the receiver's office designated by the revenue officers. The latter will indicate to the maker of the declaration the day and the hour at which they will be able to be present at the operation. Nevertheless, the space of time which they assign shall not, under the terms of the regulation, exceed two days in the town and four days in the country.

I call the attention of the service to this order. The employees shall take care that the declaration of methylation which will serve as a basis of the further control be formulated with much care and exactness. As regards the authority given to them by the new regulations to fix, themselves, under certain limitation, the moment when the methylation may be effected, this authority has for its object to facilitate the general workings of the service. The local chiefs shall use this authority with discretion; they shall come to an understanding with the manufacturers, in order to choose as much as possible according to the convenience of the latter the day and hour of operation. I rely on the tax, the spirit of conciliation of the personnel, to guard against all difficulty in this respect. It is only for unforeseen and altogether imperative reasons that the officer might excuse himself from appearing at the hour agreed on. According to the formal expression of the law of August 2, 1872, a special paragraph of article 2 of the regulations orders in fact that methylators of alcohol shall not take advantage of the absence of the officer, and that the operations of methylation must always be effected under the eye of the officer.

Any methylation that is not effected under these conditions would be considered as nonvalid, and the general tax would become due on the quantity of alcohol put on the market. Manufacturers shall at once be informed of this.

The declarations of methylation shall continue to be received in the register No. 20 C. The wording of these declarations will be modified conformably to the model annexed to the present instructions. Until the administration has issued a new edition of these registers those which are actually in the hands of the accountant shall be made conformable by means of the pen.

As soon as he has received a declaration of methylation, the receiver shall give notice thereof to the local chief of the service by means of a special bulletin detached from register 20 C (new model), where they will be found printed in the form of an appendix following the duplicate of the declaration (see the new model 20 *c* at the end of the present circular). This bulletin of advice bears a stub, which the local chief of the service will send back without delay to

the receiver, with the indication of the day which he has fixed for the methylation. The receiver will immediately give notice of that day to the methylator.

Bulletin 6 A will be used for these advices.

Article 2 contains also some dispositions to which I call the particular attention of the service:

Prohibition to alter the alcohol and the methylating substances presented for methylation.

1. Prohibition to present for methylation alcohols which have received an addition of alcohol or of methylating substances.

It was necessary to introduce this order in the regulations to reach certain frauds which were frequently practiced and for the repression of which the former legislation contained no explicit provisions. These frauds consisted in having the same alcohols methylated several times after they had been more or less perfectly restored to the natural state, the methylator keeping at his disposal equal quantities of well-tasting alcohol which he clandestinely delivered for consumption. Hereafter maneuvers of this kind shall constitute a contravention of the regulation, and by this very fact shall fall under the penalty enacted by article 1 of the law of February 28, 1872 (article 3 of the law of March 21, 1874). The service can not use too great vigilance to prevent or repress such fraud.

Obligations to employ methylating agents conformable to the regulation type; control of these substances; sending of samples.

2. Obligations to employ none but methylating substances conformable to the type determined by the committee of arts and manufactures, and to submit to the excise samples of these substances.

The committee of arts and manufactures has decided that certain methylating substances—notably methylene—shall, in order to constitute efficacious methylating agents, be conformable to such type. In order to make sure of this conformity, the employees, therefore, would have to take samples at the moment of each operation, transmit them to the laboratory of the excise, and await the result of the analysis before the methylation is effected. It has appeared simpler, and at the same time more advantageous for the service and for the manufacturer, to lock up under the double key of the official and of the methylator, in a place satisfactory to the excise, the substances from which samples have previously been taken.

The closure will be effected by means of two padlocks with different locks, furnished by the service.

The following method of operating is to be employed:

When the methylator has received methylating substances—methylene for example—he shall inform the officials. They will appear as soon as possible and take a double sample, which they will seal with the seal of the excise (two samples for each receptacle, or if the number of receptacles be too great and if the methylene which they contain has been declared to be of the same kind, a double sample from a certain number of these receptacles). The liquid from which these samples are taken is then inclosed, in the presence of employees, in the room mentioned in article 2. One of the samples shall be immediately and directly mailed to the central laboratory of the excise. When the result of the analysis is known, the

methylene, if it is accepted, may be used for all the further operations of methylation without taking new samples. The officials shall only be really present at the taking of the quantity necessary for each operation, and assure themselves that no other liquid is substituted for the methylene thus verified.

Such is the general rule. The administration, however, is disposed to admit the use of any other mode of control which may give sufficient guaranty.

In particular, instead of causing the methylene to be placed under key, one may content himself with sealing the receptacles which contain it. The procedure shall then be the following:

The officers shall take samples in the form which has just been indicated. Immediately after taking them the receptacle shall be hermetically stopped and the stopper shall be suitably fixed by means of strips of cloth, the extremities of which are united and tied over the neck of the receptacle, then sealed with the seal of the excise so that the stopper can not be drawn out without cutting the strip or breaking the seal. When the methylene has been recognized to be good, this seal will be replaced by a lead, which shall also close the vessel very hermetically. The officer will then have merely to verify the state of the lead at the moment when the methylator wishes to use the inspected methylene.

Methylators who wish to submit themselves to this mode of verification shall use exclusively glass receptacles, in order to store the methylene.

In order to give greater facilities to industry, the administration authorizes manufacturers, merchants, or depositors of methylene to have the wood spirits which they intend to sell to methylators appraised. In that case the samples shall be taken on the premises of those manufacturers according to the mode of procedure indicated above. Immediately after the taking of samples the methylene shall be placed in a recipient closed by means of two padlocks, the key of one of these padlocks remaining at the exclusive disposal of the service.

The methylene is of different compositions according as it is taken at the beginning, in the middle, or at the end of the distillation. That is a fact which the officer will have to bear in mind. If the products of one and the same distillation arrive successively in different receptacles, samples would have to be taken from each of these receptacles, and, furthermore, the officer would have to make sure by previous shaking that the liquor is homogeneous.

When the methylene has been recognized as good, the transfer into glass receptacle can not be effected except in the presence of the officer, and in proportion as it is effected these glass receptacles shall be sealed by means of a lead. The methylene vessels shall be sent in this state to the methylators, and the employees will confine themselves to making sure before the methylation that the leads are intact, without having to proceed to any other kinds of inspection.

In these different cases the cost of leading shall be refunded by the methylators or manufacturers, merchants,

and depositors of methylene, at the rate of 10 centimes for every lead applied.

For the operations of leading and for the entry of receipt of the press of the lead the provisions of the circular, No. 288, of August 17, 1843, shall be complied with.

The principal receivers shall apply to the administration, under the stamp of the fourth division, second bureau, for the leads, pliers, and strings which are necessary for these operations.

It is understood that it is only a matter of toleration for the administration to authorize the use of methods of control other than the deposition of the methylene in a room under double lock, the only system legalized by the regulations of January 29, 1881. These authorizations will be at once withdrawn if they give rise to abuses. Manufacturers must be informed of this.

Hereafter, methylators can no longer effect mixtures of alcohol and methylene except after having previously had their methylene analyzed and accepted. It is important, therefore, from the point of view of the interest of manufacturers, that the analyses of samples may be made quickly and that the results thereof may be notified as promptly as possible. To this end, instead of sending the samples to the administration by the routine way, the local chief of the service shall send them directly and without delay to the director of the central laboratory of the excise, 9 rue Cambon, at Paris. They shall send at the same time in duplicate to the director or to the subdirector a letter of advice drawn up according to the model annexed to the present instruction. Previously they shall detach from the bulletin the label joined thereto and shall attach that label to the flask containing the sample. As soon as they have received the bulletin in question, the directors or subdirectors shall address immediately and directly a copy thereof to the administration and the other copy to the central laboratory. The administration will thereupon publish, by means of the third sheet of those printed formulas, the result of the analyses.

In order to avoid all error and all confusion in the sending of samples, the bulletins shall be drawn up with great care and their indications shall correspond absolutely to those of the labels attached to the flask and to the receptacle from which the methylene has been drawn. For the rest, only a single sample shall be treated on one blank.

The administration will have printed under 20 E bulletins of shipment of samples. It will furnish them as administrative print. The principal receivers must therefore at once ask of the store department a sufficient number of them to satisfy the need of their departments.

For the present, the local chiefs of service will confine themselves, as in the past, to simple letters of shipment, but they will transmit hereafter the samples to the central laboratory. On the other point, the service will conform itself to the disposition contained in Circular No. 227, of January 23, 1878; only it will be necessary as a measure of precaution to take the samples of methylene in duplicate.

The second sample will be retained by the employees, who will restore it to the manufacturer as soon as the result of the analysis shall have been notified to them.

In case of contestation or suit at law, not two, but three, and if need be four, samples shall be taken.

The samples shall not be more than half a liter; this quantity suffices to allow the laboratory to make its experiment.

The value of the samples shall be refunded immediately to the manufacturers, and the cost thereof shall be provisionally allotted to the account of the advances to be liquidated. The director shall address every three months to the administration, at the same time as the list 20 G, a proposition of admission for definitive expenses of the cost of purchase and also the cost of shipment of samples of all kinds taken during the three months, and they shall produce exactly in support of these suppositions the memoirs, receipts of the manufacturers, the receipts of railways, etc.

Obligations to effect a mixture of alcohol and the methylating substances in isolated tubs.

The last paragraph of article 2 contains a disposition which explains itself. The mixture of alcohol and the methylating substances must be effected in isolated tubs resting on free support. The service will thus be enabed easily to make sure on the one hand that the methlylations have been effected under the conditions determined by the committee of arts and manufactures, and on the other hand that no quantity of natural alcohol has been fraudulently withdrawn from the course of operations.

I invite the local chief to see that this order is strictly executed. It will be proper, however, to grant to manufacturers who demand it the privilege of setting up the methylation tubs conformably to the regulation prescription.

When called upon to verify a methylation, the employees shall, first of all, ascertain with great care the quantity and alcoholic strength of the spirituous liquors which are to be methylated. They shall thereupon assure themselves by all the means at their disposal that these spirituous liquors have not already undergone a methylation followed by restoration to the natural state. Finally, taking all the precautions necessary to the end that not a part of it can be diverted to a state of nature, they shall cause to be incorporated before their eyes, in the required proportions, the methylating substances whose employment is obligatory.

It does not suffice that the incorporation of the methylating substances take place in the presence of the officer. The employees shall prolong their superintendence until these mixtures have been brought to the condition of a perfectly homogeneous product in all its parts before their eyes. Thus, when there is question of separating of varnishes, the methylation shall not be considered as sufficient until the resinous substances are entirely dissolved, and the essences, if any of them are added, are intimately united with the methylic and vinous alcohol. In any case, the employees shall not draw up the act of methylation until they are in a position to certify the compliance with

the regulations and formalities. The acts of methylation, moreover, shall indicate very accurately the nature and quantity of the substances employed.

In the towns, the operation shall be directed as much as possible by the comptroller or the chief of the service, and in the course of their verification the inspector shall frequently intervene to make sure that the instructions are well understood and well applied.

Article 3.—Prohibition to place distillation apparatus or to carry on commerce in natural alcohols in the rooms intended for the methylation of alcohol or for the storage of methylated alcohol.

Under the terms of article 3 the methylation rooms, as well as the magazines where the methylated alcohols and the product manufactured with these alcohols are kept, must not communicate, except by the public road, with rooms containing distilling apparatus or with the magazines devoted to wholesale or retail commerce in natural alcohol.

This provision, the bearing of which will be readily understood, is not new in our legislation on beverages. For the rest, the regulation in this respect merely confirms by statute what is already practiced.

The same article, however, provides for the case when, owing to the necessities of their industries, certain methylators, such as manufacturers of ether, manufacturers of alkaloid, etc., should be authorized to set up in their shops distilling apparatus. It gives to the administration the authority to regulate by itself in those cases the measures to be taken to guard the interest of the treasury.

Before granting authorizations of this kind the directors shall consult the administration on its propositions relating to the particular obligations which it might be necessary to impose on the manufacturers. It must be remarked, moreover, that this toleration relates solely to the presence of distilling apparatus in the methylating shop. The apparatus shall be exclusively intended for the operation on account of which the reduction of tax is granted, and under no pretext shall the rooms reserved for methylation and the magazines intended for methylated alcohol communicate internally, in case of the establishments in question, with distilleries of alcohol or shops where liquors are manufactured.

Article 4.—Prohibition to make or to allow to issue from the methylating shop or from storage rooms of methylated alcohols any quantity of natural alcohol.

Article 4 prohibits methylators from making or allowing to issue from the methylating shop or from the magazines of methylated alcohols any quantity of natural alcohol.

This disposition completes, while rendering accurate, that disposition which forms the object of the first paragraph of article 3.

All the spirituous liquors introduced in the establishments of the methylators shall be further methylated. Such is the principle, such the general rule. Nevertheless, in order to mitigate anything that might be too absolute in the application of this rule, article 4 leaves with the revenue service the authority to authorize, if need be, the manufacturers to take from their factories unmethylated alcohols. The officers shall grant this kind of authorization without difficulty when they are convinced that there is no occasion to fear abuse, or when the instances when natural alcohol is taken out are not frequent enough to lead one to suppose that the manufacturer trades unlawfully in these spirituous

liquors. For the rest, they shall be present as much as possible at the taking out of the alcohol.

Obligations to transform on the spot into finished product the alcohol submitted to methylation; consequent prohibition to put on the market those which have simply received addition of methylation substances and do not constitute finished product, properly so called.

The second paragraph of article 4 decrees the obligations for the methylators to transform the alcohols which they have submitted to methylation into industrial and commercial products on the spot—that is to say, within the limits of their factories; in other words, aside from the exceptions provided by article 6 of the same regulations the methylated alcohols can not be put on the market so long as they have not been converted into finished products.

This provision is intended to prevent the grave abuses which might arise if the methylators were authorized to often ship in considerable quantities alcohols simply methylated—that is to say, elementary mixtures of spirits and methylene—which it would be easy to restore to the natural state, in order to introduce them afterwards to consumption as beverages, to the great detriment of the treasury and of public health. This disposition, moreover, is conformable to the intention of the law of 1872, which, by delegating to the committee of arts and manufactures the right to formulate the procedure of methylation proper for each industry, meant to have it understood by this very fact that the methylated alcohol should be exclusively put into use by the manufacturers for the purpose of the manufacture of finished product. I call the attention of directors especially to this disposition of the second paragraph of article 4 and to the correlative order contained in the following paragraph, under the terms of which the manufacturer's product must be exactly of the kind for which the authorization of methylation has been accorded to the manufacturer.

When a question arises between the revenue service and the methylators in regard to the character and the nature of the product put into circulation, it will be necessary to notify the administration thereof and to transmit at the same time to the laboratory samples of the same product.

Formalities for circulation.

The law of February 28, 1872, subjects to the formalities of circulation prescribed by the law of April 28, 1816, the varnishes, scented water, ether, and in general all preparations with alcoholic base. As this disposition applies as well to the preparation with a base of methylated alcohol as to the preparations with a base of ordinary alcohol the regulations have nothing to prescribe on this point. For the circulation of methylated alcohol or of products with a basis of methylated alcohol, the following rules shall be complied with:

As concerns liquid products, it will be necessary to deliver—

1. A permit, 2 B, for the shipment of products not freed from duty sent with the transfer of credit of duty, and for the shipment of products free from duty sent to methylators or to depositors subject to the verification by the revenue service. In the latter case, the receiving officers shall take care to mention in a very plain manner on the permit that the products sent are free from duty on the methylation.

The products not freed from duty sent in virtue of permit will necessitate the guarantee of payment of duty on

arrival. On entering towns subject to tax, the collection of the duty on methylation and, if need be, the town tax, will be made by means of a special register, No. 10; in towns not subject to entrance duty and in the country, it will be effected by a special register, No. 9.

2. A discharge, 4 B, for the shipment effected with payment of methylation duty at the moment of taking out.

3. A pass permit, 3 B, for shipment of products free from duty sent to addresses not subject to the verification by the revenue service.

Special registers 2 B, 3 B, and 4 B (beverages) shall be used, as in the past, for the delivery of article 6.

Solid products, such as sulphate of quinine, santonine, atropine, etc., are exempt from the formalities of circulation. Nevertheless, when they are exported by a bonder, the latter can obtain on his account the discharge of the quantity of alcohol which is represented only on conditions of providing himself with a permit. (Circular No. 107 of July 15, 1835.)

According to the concession already granted by Circular No. 223 of November 2, 1877, the free circulation is authorized up to the amount of 2 liters of pure alcohol for the product freed from duties shipped by nonbonders to persons not subjected to inspection.

Taking of samples on the premises of methylators and from the product in the course of transportation.

Some methylators have thought themselves at liberty to deny to the service the right of taking samples from substances which they put into use and from the product which they manufacture. The right of the officers evidently was not subject to dispute. Nevertheless, in order to prevent the return of similar difficulties, the last paragraph of article 4 orders that the employees shall be able every time they deem it suitable to take samples, not only from the methylating substances and from the finished product or the product in preparation found on the premises of methylators, but also from the product in the course of transportation. The revenue service shall take samples in this way from time to time. In particular, it shall not fail to do so whenever there are any doubts regarding the nature and composition of the product.

The value of the samples shall be reimbursed to the persons interested. In this respect the rules set forth above shall be complied with as regards reimbursing the price of samples taken from the methylating substances.

Any refusal on the part of manufacturers to allow the taking of samples, and any hindrance raised by them against such taking of samples, shall constitute a contravention of the orders of the regulations of January 29, 1881; and by virtue of the law of March 21, 1874, these contraventions shall be liable to the penalties decreed by article 1 of the law of February 28, 1872.

Register of manufacture to be kept by the methylator.

Under the terms of article 5 of the regulations the methylators are obliged to inscribe on a register specially kept for this purpose, on the one hand, at the very moment of methylation, the quantity of alcohol used, the kind and quantity of methylating substances employed, the volume of the mixtures obtained, as well as the quantities of real alcohol

which they represent; and on the other hand, from day to day, the volume of mixtures put to use, the quantities of alcohols represented by these mixtures, the kind and quantity of products manufactured, as well as the proportion according to which the alcohol has entered into the preparation of the product.

The revenue service will find in the indication of this register useful elements for estimation and control. In particular, the officers will be able to ascertain whether the real product of manufacture corresponds to the quantity of alcohol which the manufacturers submit to methylation. It is necessary, therefore, that this register shall be kept with great exactness. The employees shall look to this.

The administration shall print a special model which, in the series of forms of the stores department, shall receive the number 20 F. In the meantime the manufacturers shall use the blank 50 A, which the officers shall take care to modify for this purpose.

Article 6.—Special rule for the circulation of simple mixtures of alcohol and methylene.

Whatever be their destination, the varnishes, ether, and other liquid preparations of a base of methylated alcohol which constitutes finished products—commercial products—may be shipped in any quantity. On the contrary, article 4 of the regulation stipulates as a general thesis that the simple preparatory mixtures of alcohol and methylated substances shall be employed on the spot and shall not thereafter be admitted to circulation. This rule was established and accurately observed in the beginning of the application of the law of August 2, 1872, but experience has shown that it was convenient to depart from it in certain cases in order to satisfy legitimate industrial need. Thus the administration has authorized methylators to prepare and sell simple mixtures of alcohol and methylene which have not the character of finished product and which are generally destined to supply heating and illuminating apparatus.

This concession was made subject to certain special conditions. The producers of mixtures in particular had to inscribe all the sales on a special register, and they were not allowed to deliver at one time to the same person more than 10 liters of methylated alcohol. Article 6 confirmed this departure, while specifying the guaranties and restrictions to which it will hereafter be subject.

As in the past, manufacturers who prepare or receive simple mixtures of alcohol and methylene destined for illuminating or heating purposes or to clarify varnishes shall keep a special register on which they shall inscribe, day by day—

1. The quantities of mixtures which they have successively manufactured or received from other establishments.

2. The quantities which they deliver, as well as the name and the address of the addressee.

3. The quantities which they employ in the interior of their establishments and the manner of this employment.

This register is entirely distinct from the register of manufacture which is to be kept according to the prescription of article 5. Methylators who deal in alcohols methylated by simple additions of methylene therefore shall, as a general

rule, keep both these registers. Nevertheless, the revenue service shall take note whether in certain cases, particularly in the case of methylators who trade exclusively in alcohols for illuminating, heating, and clarifying purposes, the registers of deliveries might not be modified in such way as to receive, at the same time with the declarations of sale, all the indications which the register of manufacture involves.

The administration will also print these registers of sale, which, in the series of models, will receive the number 20 G. In the meantime it will be necessary to use, as has been prescribed in the case of registers of manufacture, the blanks 50 *a*.

The limit of 10 liters, which had previously been adopted for the deliveries of simple mixtures of alcohol and methylene, has become insufficient, especially since the apparatus for heating and for clarifying with alcohol has become so common. In this respect the new regulations satisfy to a large extent the wish often expressed by manufacturers. Article 6 extends the limit—

1. To 100 liters (total volume) if the alcoholic mixture includes methylene in the proportion of one-fifth, at least, of the volume of alcohol.

2. To 20 liters (total volume) if the mixture, which must always contain at least one-ninth of methylene, contains less than one-fifth.

This limitation relates only to shipments to the address of persons not having the quality of bonders. Dealers provided with a wholesale merchant's or distiller's license, under the conditions indicated on page 5, may receive and ship in any quantity the mixtures of spirits and methylene termed illuminating, heating, and clarifying alcohols.

It is understood that if the addressees themselves carry on wholesale or retail trade in methylated alcohols, they must, whatever be the importance of each shipment, conform to the obligations stipulated by article 6.

All the other dispositions which the administration had previously taken with a view of regulating manufacture and sale of methylated alcohols, and which are not reproduced in the decree, shall cease to be applied. Particular mixtures composed of alcohol and one-ninth of wood spirits, specially intended for clarifying varnishes, shall no longer be limited to one-third the quantity of alcohol transformed into varnishes.

Up to the present, simple mixtures of alcohol and methylene have not been exported from France. It is possible that manufacturers enjoying the benefit of the duty may in the future find an outlet for these products abroad. The limit of 20 and 100 liters specified in article 6 would not apply to shipments abroad.

The revenue service shall very closely superintend the operations of manufacturers who may take the license of bonders with a view of receiving in any quantity simple mixtures of alcohol and methylene and putting these mixtures on sale. In natural alcohols, and in methylated alcohols in rooms not separated by a public road, all the orders imposed on them by the regulations, and particularly the

orders relating to the keeping of the register of receipts and sales, simply apply to them; in fact, these deposits of methylated alcohols may constitute a sort of danger to the tax interest. It is necessary, therefore, that all guarantees shall be taken with a view of guarding against abuses.

Article 7.—Keeping of accounts by bonders of methylated alcohol.

Article 7 determines the form in which the accounts of methylators provided with a license who shall claim the credit of the methylation duty shall be kept. Under the terms of that article bonders, according to the nature of their industry, are subjected to all the obligations imposed on distillers by profession and on wholesale dealers in beverages. In particular, they must make a deposit in order to guarantee the methylation tax. As regards wholesale merchants or distillers who by reason of their industry have already made a deposit, it may suffice to mention in the act entered in register 52 C that the deposit applies equally to the methylation tax that may become due. The directors and subdirectors shall see to it that in default of a special deposit for the tax in question, this mention shall be expressly made on the record of the deposit.

The operations of the methylators who claim bond for natural alcohols are followed by two distinct accounts:

1. An account of natural alcohol. This account is filled out according to the shipment which the bonders notify to the revenue service, and shall be discharged by virtue of the act which the officers shall draw up in consequence of the operations of methylation effected under their eyes.

2. An account of methylated alcohol. The entries shall consist of the quantities of methylated alcohol successively prepared or received from outside (volume or weight, proportion of alcohol, quantity of alcohol). The issue shall consist of the quantities of the finished products sent out by virtue of needs of transportation of the excise or recognized as wanting, and the methylated alcohol which they represent.

The articles which constitute the entries and the discharges of this second account indicate very accurately the quantities of alcohol methylated (vinous alcohol) represented by the products. This indication is indispensable to the regulation of the accounts with precision and without loss to the treasury, as well as without prejudice to the persons subject to tax. For this purpose the deeds of transportation which accompany the product shipped by the methylators (permit when the methylation duty is payable or has to be guaranteed on arrival and discharged 4 B: 1 special when it is acquitted the moment of taking out) shall state the proportions of pure vinous alcohol represented by these products.

The regulations have provided for the case in which the finished products do not retain the alcohol or are constituted in such way that the revenue service has not the means to recognize in them the presence of alcohol. The quantities of real alcohol are then estimated according to a base of conversion agreed on between the manufacturers and the administration. Such in particular is the case for ether and divers alkaloids.

The basis of conversions is determined according to the results of actual experiments made by way of contradiction by the revenue service and the persons interested. The results of these experiments are submitted to the administration, which determines the basis to be adopted.

If there is absolute disagreement between the manufacturers and the employees, or if successive experiments give different results, it will be necessary to refer immediately to the administration, which will designate, if need be, experts to settle the difference or to proceed to new experiments.

All the deficits which are referable to account No. 2 are subject to the methylation tax. When they apply to liquid products actually retaining alcohol, such as varnishes, tinctures, combustible products, etc., they are not dutiable except under the legal deduction applicable to nonmethylated alcohol (7 per cent).

This deduction shall also be applied to ether and kindred liquid products which, although they ought not theoretically to retain the alcohol which has served for their manufacture, always contain, as a matter of fact, a rather notable proportion of it, and which, moreover, by their very nature, are apt to evaporate even more rapidly than alcohol.

As regards solid products, such as sulphate of quinine, fulminates, etc., they are excluded from the benefits of deduction, and they will hereafter be followed by a distinct account in the registers Nos. 50 A and 50 D.

The deficit of alcohol will appear in account No. 1, and shall be subject to the general consumption tax, and, if need be, to local taxes. Both for the keeping of accounts of the bonded methylators and for the stock taking and verification to be made on the premises of the taxpayers, the service shall conform to the regulations and instructions relating to the keeping of accounts and to the control to be exercised in the case of wholesale dealers in beverages. It seems superfluous to reproduce these instructions here. I will confine myself to remarking that the dispositions contained in articles 8 to 12 of the law of July 19, 1880, are applicable to the methylators placed under the bond management. It will be proper, therefore, to refer in this respect to the recommendation in Circular No. 304 of December 9, 1880.

Under the terms of the last paragraph of article 7 of the regulation, no account is kept of methylated alcohol in the case of manufacturers who, while enjoying the credit of the general consumption tax of natural alcohol, pay the tax on methylated alcohol as the methylation is verified. The revenue service, nevertheless, shall follow for their record, on the blank according to the indications of the registers, the keeping of which is prescribed by articles 5 and 6, the operations of these manufacturers, and also the operations of the methylators who have given no bond either for natural alcohols or for methylated alcohols.

In the case of the manufacturers in question the employees will not have to proceed to regulate the taking of stock of

methylated alcohol or of finished products; they will confine themselves to making, from time to time, simple material verifications under the conditions determined by article 8 of the regulation.

Article 8.—Verification and visits by the revenue officer on the premises of the methylators of alcohol.

This article gives to the service of indirect contribution the right to operate under the conditions determined for the distilleries by article 235 of the law of April 28, 1816, and to make visits and verification in the establishments of methylators and in the dependencies of these establishments, whatever be the management adopted for the payment of the methylation tax. All the methylators, whether they are provided or not provided with the distiller's or wholesale merchant's license, are bound, moreover, to be present at the inspection of the officers or to cause themselves to be represented there by a delegate to facilitate these inspections and to furnish for this purpose the labor and utensils necessary. They must also exhibit, whenever required, the registers of manufacture and sale deposited in their hands, and to declare exactly the species and quantity of product which they have in store and the quantities of alcohol which these products represent.

Any violation of these orders is punishable by the penalties enacted by article 1 of the law of February 28, 1872. Thus, the refusal by a methylator of alcohol to allow the employees to enter into his establishment or to facilitate their operations there, would be subject not to the penalties provided by the law of April 28, 1816, but to the penalty of 500 to 5,000 francs specified by article 1 of the law of February 28, 1872.

Any inexact declaration of the quantities of methylated alcohol or of the finished products remaining in store would be subject to the same penalty. In fact, the service shall abstain from drawing up a report for differences of small amounts. It shall not even report judicial acts unless it finds itself in the presence of fraudulent maneuvers that are well authenticated. In this respect it shall conform to the recommendation contained in Circular 304 of December 9, 1880, relating to the analogous declaration required of wholesale dealers in beverages.

Article 9.—Register of manufacture and register of sales.

The various registers, the keeping of which is prescribed by the regulation—namely, register of manufacture (article 5) and register of sales of methylated alcohol (article 6)—are furnished gratuitously to the manufacturers; they are lettered and initialed by the director or the subdirector.

Article 10.—Methylation of alcohol at Paris.

Article 10 determines the special condition to which the methylation of alcohols has to be subjected at Paris owing to the special management of that city.

The methylators established at Paris must effect the mixture of alcohol and the methylating substances prescribed by the committee of arts and manufactures in real warehouses; they must pay immediately the methylation tax; finally, they are bound to transport to their residence—not elsewhere—under the escort or under the restriction of a permit the alcohols which have received the addition of methylating substances.

Being excluded from the benefits of bonds, both for

natural and methylated alcohols, they do not have to pay the distiller's or wholesale merchant's license; but they are subjected to all the other obligations which have to be complied with by methylators established outside of Paris, and which form the objects of articles 1, 2, 4, 5, 6, 8, and 9 of the regulation, to wit:

Proof of a valid charter for the industry in pursuance of which the benefits of the drawback is demanded.

Previous declaration of the nature, kind, and quality of products which they wish to manufacture and the uses for which the products are intended.

Special declaration made in advance in the office of the actual warehouse for each operation of methylation.

Obligation to subject on their premises the mixtures taken out of the real warehouse to the transformation involved in the fabrication in view of which the methylation has been admitted.

Keeping of registers of manufacture and sale.

Obligations to permit and facilitate the verification by the employees, etc.

Certain methylators established outside of Paris have shops for transformation and for sale within Paris. The escort or the permit is equally obligatory so far as relates to simple mixtures of alcohol and methylene in quantities higher than those provided for in article 6, which those methylators cause to be conveyed to their sales rooms within Paris.

The shipment of which there is question necessarily involves delivery of a permit for the transportation up to the customs line. They will then arrive at the magazine of the methylator either by virtue of the same permit or under escort. Even when the transportation takes place without escort, which the customs service will always be at liberty to demand, the permit will be left in the hands of the conductor and will have to be retained by the addressee in order to be subsequently exhibited to the employees charged with the service of methylated alcohol at Paris.

According to the rule, the permit indicating Paris as the place of destination, and delivered to accompany methylated alcohol which has already paid the duty, shall mention that the products are freed from the duty of methylation. The products not freed shall be subject to the methylation duty and to the customs duty on introduction into the city.

Aside from shipment from the outside factory to the inside establishment of the same manufacturers, no methylator is allowed to ship to Paris simple mixtures of alcohol and methylene in quantities exceeding 100 liters if the mixture contains one-fifth of methylene, and exceeding 20 liters if it contains less than one-fifth.

As these orders in a certain measure are of interest to methylators in the country, the service shall bring them to their knowledge.

Article 11.—Prohibition to disinfect or restore to the natural state methylated alcohol.

The regulations expressly prohibit all operations of diluting, rectification, or decantation intended to restore to the natural state or disinfect methylated alcohol. These operations evidently constitute fraudulent maneuvers;

but, aside from the case provided for by article 14 of the law of June 21, 1873, their character as misdemeanors was not sufficiently defined by existing legislation. Article 11 is intended to do away with this defect and to place maneuvers of this kind expressly under the penalties enacted by the law of February 28, 1872.

Article 12. Article 12 states that the provisions of the ordinance of June 14, 1844, are abrogated. The methylation of alcohol shall hereafter be solely under the rule of the law of August 2, 1872, and under the regulations of January 29, 1881. Violations of any kind of the provisions of these regulations fall under the penalties enacted by article 1 of the law of February 28, 1872. At Paris and in the other localities subject to the same prohibitive law, the restoration of methylated alcohol to the natural state remains punishable by imprisonment, as enacted by article 4 of the law of June 21, 1873.

ROUGOU,
Councilor of State, Director-General.

For the duplicate:

CROZEN,
Bureau Chief in Charge of the Third Division.

LAW OF FEBRUARY 28, 1872.

[Extract.]

ARTICLE 1.

* * * * * * *

Violations of the provisions of the present article involve the confiscation of the beverages seized and a fine of 500 to 5,000 francs.

* * * * * * *

ARTICLE 4.

The following substances are subject to the formalities of circulation prescribed by chapter 1, title 1, of the law of April 28, 1816: Varnishes, scented waters, ethers, chloroforms, and all other preparations with alcoholic base.

LAW OF AUGUST 2, 1872.

[Extract.]

ARTICLE 4.

Alcohols methylated in such way as not to admit of being consumed as beverages shall be subjected everywhere to a special tax called methylation tax, the rate of which is fixed in principal at 30 francs per hectoliter of pure alcohol.

The duty of entry on methylated alcohol shall not exceed one-fourth of the duty of the treasury.

ARTICLE 5.

The committee of arts and manufactures shall determine for every branch of industry conditions under which the methylation of alcohol shall be effected in the presence of the employees of the excise.

LAW OF JUNE 21, 1873.

[Extract.]

ARTICLE 14.

The penalty of six days' to six months' imprisonment shall be applied to offenders who, contrary to the prohibition of article 10 of the law of May 22, 1822, and the royal ordinance of July 20, 1825, shall have manufactured, distilled, or restored to the natural state, within the limits of Paris or any other localities subject to the same prohibitive systems, brandies or spirits, or shall have restored to the natural state methylated alcohols previously introduced with payment of the reduced tax.

LAW OF MARCH 21, 1874.

[Extract.]

ARTICLE 3.

A set of regulations of the public administration shall determine the measures necessary to assure the collection of the tax * * * from methylators of alcohol. * * *

Violations of the provisions of these regulations are subject to the penalties enacted by article 1 of the law of February 28, 1827.

DECREE OF JANUARY 29, 1881.

[Inserted in the official journal of April 29, 1881.]

FRENCH REPUBLIC.

The President of the Republic, on the report of the minister of finances—in view of the law of April 28, 1816; in view of the law of July 24, 1843; in view of the ordinance of June 14, 1844; in view of article 1 of the law of February 28, 1872; in view of articles 4 and 5 of the law of August 2, 1872; in view of the decree of December 4, 1872; in view of the law of June 21, 1873; in view of article 3 of the law of March 21, 1874, which reads as follows: "Regulation of public administration shall determine the measures necessary to assure the collection of the tax * * * from the methylators of alcohol. * * * Violations of the provisions of these regulations are subject to the penalties enacted by article 1 of the law of February 28, 1872"—the council of state having agreed, decrees:

ARTICLE 1.

Every manufacturer who desires to profit by the moderation of tax applicable to alcohols methylated in such manner as not to admit of being consumed as beverages, is to address to the administration of indirect contribution a demand, specifying—

1. The mode of employment of the alcohol, and the processes proposed for its methylation.
2. The nature, kind, and quality of the products which he manufactures, and their intended use.
3. The quota of alcohol necessary for the manufacture of the product.

When the process of methylation has already been authorized by the advisory committee of arts and manufactures, the administration of

indirect contribution immediately decides on the demand. If there is question of a new process, the administration before admitting it is bound to have it examined by the consultative committee of arts and manufactures, which, conformably to article 5 of the law of August 2, 1872, determines the condition under which the methylation shall be effected.

The manufacturer can only be authorized to manufacture or prepare methylated alcohols when he proves that he is provided with a charter valid for the exercise of the industry in view of which he claims the benefits of the reduced tax. He must, moreover, be provided with a distiller's license if he himself produces the alcohol which he methylates, or with a wholesale merchant's license if he keeps in store, with the credit of the general consumption tax, alcohols intended to be methylated.

The manufacturer who does not demand the credit of taxes is bound to methylate the alcohols which are sent to him under permit within the space of ten days, beginning from the moment when he has received the alcohols.

He shall pay the tax at the moment the methylene is effected.

ARTICLE 2.

Each operation of methylation is preceded by a declaration indicating—

1. The kind, quantity, and degree of the spirituous liquors to be methylated.
2. The nature of the products to be manufactured.
3. The kind and quantity of methylating substances.

The declaration of methylation is made at the receiver's office designated by the agent of indirect contribution, who informs the declarators of the day and hour at which they will be able to be present at the operation. The time within which the agent must appear is fixed at two days for the town and four days for the country.

No methylation can be effected except in the presence of the employees.

It is forbidden to present for methylation with the benefits of the reduced tax alcohols to which methylated alcohols or methylated substances have been added.

The methylating substances for which type has been determined by the consultative committee of arts and manufactures must be conformable to these types. They are verified by the excise according to the samples taken by the agents. The samples having once been taken, they must be locked up in a room previously agreed on by the excise under the double key of the manufacturer and the agent of indirect contribution.

The mixture of alcohol with the methylating substances for which the consultative committee of arts and manufactures have determined types must be effected in isolated tubs resting on free support.

ARTICLE 3.

The shops where the methylation is effected, as well as the storehouses where the methylated alcohol and the products manufactured with these alcohols are placed, can have no communications except by the public road with the rooms containing stills or with those where the unmethylated alcohols are placed which are intended to be sold at wholesale or retail.

Nevertheless, if the industry carried on by the methylators absolutely requires the employment of apparatus of distillation or rectifica-

tion, the administration of indirect contribution may authorize, under the conditions determined by it, the installation of such apparatus in the localities intended for methylation.

ARTICLE 4.

Methylators can not without special authorization given in advance by the service of indirect contribution, issue, or allow to issue, from the rooms assigned to the methylation of alcohol or to the storage of methylated alcohol any quantity of nonmethylated alcohol.

Aside from the case provided in article 6 of the special regulation, the methylated alcohol shall be employed in the methylators' own establishment, or shall be transformed on the spot into finished products, industrial and mercantile, recognized as such by the testimony of an expert in case of dispute between the methylator and the excise.

The manufactured product shall be exactly of the kind of those for which the authorization to employ alcohol with reduced tax has been granted.

Whenever it is deemed desirable, the service of indirect contribution shall take, against reimbursement in the shops or magazines, samples of the alcohols put into use of the methylated substances, as well as of the finished products or those in preparation. In case of removal, and when in course of transportation, the service shall also have the right to take samples of the products shipped.

ARTICLE 5.

There is placed at the disposal of methylators of alcohol a register, on which they inscribe day by day, without any blanks or words written over another—

On the one hand, the quantity and degree of the spirituous liquors submitted to methylation, the kind and quantities of methylating substances employed, the volume of the mixtures obtained, and the quantity of real alcohol which they represent.

On the other hand, the volume of the mixtures put to use, the quantity of real alcohol represented by these mixtures, the kind and quantity of the product manufactured, as well as the proportion in which the alcohol has entered into the preparation of the product.

ARTICLE 6.

Manufacturers who prepare, under the exemptions of the reduced tax, simple mixtures of alcohol and methylene according to the formulas approved by the advisory committee of arts and manufactures, are bound, furthermore, to mention day by day on a special register, without any blank or words written over another—

1. The quantities of these mixtures successively manufactured or received from other establishments.

2. The quantities which they deliver, as well as the name and address of the addressee.

3. The quantities employed in the interior of the establishment and the justification of this employment.

The deliveries made to persons who are not bonders shall not exceed per day and per addressee a total volume of 100 liters, if the alcoholic mixtures contain methylene in the proportion of one-fifth at least of the volume of alcohol, or 20 liters, if the volumes contain less than one-fifth of methylene.

ARTICLE 7.

The manufacturers or producers of methylated alcohol who are provided with a license conformably to article 1, and who have claimed the credit of the tax, are subjected, according to the nature of their operation, from the point of view of verification of credit and of payments of tax, to all the obligations imposed by the laws and regulations on distillers by profession and on wholesale dealers in beverages.

Their operations are followed by means of two accounts:

1. An account of nonmethylated alcohol. This account is kept up conformably to the keeping of account by ordinary wholesale merchants, it is filled out according to the shipment certificate which the bonders are bound to exhibit to the agents of the excise, and it is discharged by virtue of the declaration of methylation.

2. An account of methylated alcohol. The entries consist of the quantities of methylated alcohol successively manufactured or received from outside. The discharges consist of the quantities in volume or net weight of the finished products shipped by virtue of means of transfer of the excise or recognized as lacking methylated alcohol which they represent.

For the products which do not retain the alcohol, or in which the service has no means of recognizing its presence, the quantities of real alcohol are estimated on a basis of conversion agreed on between the manufacturer and the administration of indirect contribution.

The deficits which appear in account No. 2 are subject to the methylation tax. When they apply to liquid products which actually retain the alcohol, they are dutiable only under the legal deduction applicable to nonmethylated alcohol.

Any excess in alcohol recognized in the entries of one of the two accounts is to be recorded in a protocol.

In the case of bonders who do not ask for the credit of the tax on the methylated alcohols, the accounts of methylated alcohols shall not be kept.

ARTICLE 8.

Methylators are bound to allow, under the conditions determined for distilleries by article 235 of the law of April 28, 1816, the visits and verification of the employees of the indirect contribution in their establishments and dependencies. They shall be present at the verification, or cause themselves to be represented there by a delegate. They shall facilitate them, and furnish for this purpose the labor and utensils necessary.

They are obliged to exhibit the register of manufacture and sale, the keeping of which is prescribed by articles 5 and 6, and they shall, moreover, declare exactly the kind and quantity of the products remaining in store, as well as the quantity of alcohol which these products represent.

ARTICLE 9.

The various registers, the keeping of which is prescribed by the present regulation, are furnished gratuitously by the administration. They are numbered and initialed by the director or subdirector of *indirect* contribution.

ARTICLE 10.

At Paris, the menthylators shall effect the mixtures of alcohol and methylating substances prescribed by the administration at the general warehouse. The tax is paid immediately. The alcohols which have been mixed with methylating substances shall be transported from the general warehouse to the methylators within Paris under escort or with a permit.

The same requirements of circulating in Paris under escort or with a permit are imposed on shipment of simple mixtures of alcohol and alcohol methylated in quantities exceeding those provided by article 6, made by the methylators and sent from their factory outside of Paris to their sales rooms within Paris.

The provisions of the present regulations, except articles 3 and 7, are applicable to methylators who are established at Paris or who possess a sales room there.

ARTICLE 11.

Methylated alcohols or products manufactured with these alcohols can not be subjected anywhere to any decantation or rectification—in a word, to any operation intended to disinfect the alcohol or restore it to the natural state.

ARTICLE 12.

The provisions of the ordinance of June 14, 1844, are abrogated.

ARTICLE 13.

The minister of finances is charged with the execution of the present decree, which shall be published in the official journal and inserted in the bulletin of laws.

Done at Paris, January 28, 1881.

JULES GRÉVY,
President of the Republic.
J. MAGNIN,
Minister of Finances.

A true copy:

ROUCOU,
Councilor of State, Director-General.

ABSTRACT OF DECISIONS ADOPTED BY THE ADVISORY COMMITTEE OF ARTS AND MANUFACTURES IN REGARD TO THE METHYLATION OF ALCOHOL.

Obligations imposed on manufacturers to indicate the processes of methylation which they intend to employ—Adoption of methylene as a general methylating agent.

MEETING OF JULY 29, 1874.

* * * * * * *

The committee has adopted this principle—that the manufacturers interested are bound to propose the processes of methylation of alcohol compatible with the uses for which the manufactured products are intended. The committee examines the processes from the points of view of public health and the interest of the State, approves or rejects them, but does not take upon itself to indicate new ones.

A single principle has been admitted in a general way by the committee—namely, the employment of wood spirits as methylating agents in the proportion of one to nine.

Thus, whenever the employment of wood spirits is admitted by the manufacturers, the service is free to accept it; whenever the wood spirits is considered by the manufacturer as harmful to the substances which he produces, the person interested must himself indicate the process which he desires to substitute for the employment of methylic alcohol or wood spirits.

MANUFACTURERS OF VARNISHES.

MEETING OF JANUARY 18, 1873.

To mix with the alcoholic liquid presented for methylation one-ninth of its volume of wood spirits.

* * * * * * *

The service may furthermore require that there shall be added, in the presence of the employees, a quantity of essential or mineral oil, of resinous substance, or other substances intended for the manufacture of varnishes, in a proportion which shall never exceed the proportion of the recipes adopted by the manufacturer.

MANUFACTURERS OF DYES.

MEETINGS OF JANUARY 18, 1873.

Mix with the alcohol, in the same proportion as the above, wood spirits.

MANUFACTURERS OF CHEMICAL PRODUCTS.

1. Simple or compound ethers.

MEETINGS OF JANUARY 18, 1873.

Mix with the alcohol of any degree 10 per cent of sulphuric acid at 66°, or 20 per cent of sulphuric acid at 54°, taking care that the temperature of the mixture be brought up to 80° C. during the longest time that it is possible for the officer to observe it. It will be necessary not to exceed this temperature very greatly, in order to avoid the danger of fires when the mixture is effected in the open air.

MEETINGS OF JULY 23 AND OCTOBER 22, 1873.

The committee admits in principle that the residues of either of the alcohols which the manufacturers put to use under the reserve shall be conformable to determined type.

MEETING OF APRIL 9, 1873.

Chloral hydrate, iodohydrate, nitrate, acetic, formic, and valerianic ethers, aldehyde, and sulphovinate used for these different preparations shall be methylated according to the process applicable to the manufacture of ether.

3. Aldehyde.

MEETING OF NOVEMBER 11, 1874.

The committee is of the opinion that in the manufacture of aldehyde the mixture of alcohol and sulphuric acid shall be poured on the bichromate of potassium only after the rise of temperature produced in the mixture has completely ceased.

4. Chloral.

MEETING OF JANUARY 18, 1873.

Chloral, being intended for internal consumption or use, shall not be freed from tax.

5. Chloroform.

MEETING OF JANUARY 18, 1873.

The same holds of chloroform.

6. Collodion.

MEETING OF APRIL 9, 1873.

Alcohol employed for the preparation of collodion has not thus far been given the benefit of the reduced tax. The committee has reserved the question as to whether it ought to be admitted.

MEDICAMENTS.

MEETING OF JANUARY 18, 1873.

Medicaments, when they have an alcoholic base—namely, Garus elixir, melissa waters, tincture of arnica, spirits of camphor, etc.—may be considered as intended for consumption and must pay the entire duty.

DIGITALINE, SANTONINE, ATROPINE, AND ALKALOID.

MEETING OF APRIL 9, 1873.

Mix with the alcohols one-ninth of the wood spirits.

TANNIN.

MEETING OF DECEMBER 9, 1873.

Alcohol intended for the preparation of tannin must be methylated by an addition of one-ninth of wood spirits.

PHARMACEUTIC EXTRACTS.

MEETING OF OCTOBER 13, 1875.

Manufacturers of pharmaceutic extracts shall be permitted, like the manufacturers of alkaloids, and under the same condition, to methylate alcohols under the benefits of the reduced tax. The committee explains the decision as follows:

The committee has applied the entire duty on alcohol to the alcoholic medicaments, such as the Garus elixir or the tincture of arnica; but, on the other hand, it has exempted manufacturers of quinine or other alkaloids, as well as manufacturers of chemical products who employ methylated alcohol for the preparation of their product.

It will be proper, first of all, to remark that there is no possible resemblance between the medicaments which contain alcohol and which this solvent constitutes a therapeutic element, and those which, resembling extracts and alkaloids, contain no alcohol. The decision of the committee in regard to alcoholic medicaments, such as the tincture of

arnica, is therefore not applicable to pharmaceutical extracts in the same way as to the alkaloids. On the contrary, it is easy to establish, from the industrial point of view, a relationship between the manufacturer of alkaloid and that of extracts. In both kinds of manufactures alcohol is used as solvent for the extraction and purification of these products. This solvent is afterwards evaporated, and consequently is no longer found either in the alkaloid or in the extract. The alcohol being in these two cases an agent of manufacture which is consumed in the factory itself, there is no reason to deny to manufacturers of extract the consumption of this alcohol in the methylated state, since this favor has already been granted to manufacturers of alkaloid and of chemical product.

HAT-MAKING.

MEETING OF APRIL 9, 1873.

Mix with the alcohol one-ninth of wood spirits.

INSECTICIDE.

MEETING OF APRIL 9, 1873.

Mix with the alcohol one-ninth of wood spirits.

TRANSPARENT SOAP.

MEETING OF JANUARY 18, 1873.

The committee has decided that it could not come to a decision in the case when alcohol is volatilized or lost in the course of the operation of manufacture. That is the case with the manufacture of transparent soap. Consequently, the alcohol used in the manufacture of transparent soap has thus far been subject to the general consumption tax.

PERFUMERY.

MEETING OF APRIL 9, 1873.

The committee has decided that there is no occasion to admit the process of methylation imposed by some manufacturers of toilet vinegar—a process which was to consist in dissolving in the alcohol certain aromatic principles employed in the manufacture itself of the product. Consequently, the toilet vinegar, and in general all the liquid products of perfumeries, are excluded from the benefits of the deduction of tax.

LIQUID RENNET.

MEETINGS OF JULY 1 AND NOVEMBER 11, 1874.

On the advice of the administration of indirect contribution the committee admits in principle that alcohol employed in the manufacture of liquid rennet may be considered as sufficiently methylated by dilution in salt water, on the conditions that the degree of alcoholic strength of this dilution shall not exceed 10°. In default of this process or of an analogous process, the methylation shall be effected by the addition of one-ninth of methylene.

FULMINATE OF MERCURY.

MEETING OF JULY 29, 1874.

Alcohol employed in the manufacture of fulminate of mercury shall be methylated by the addition of one-ninth of wood spirits.

MEETING OF DECEMBER 6, 1875.

The committee admits as methylation process the addition to the alcohols of residues derived from previous manufacture.

ETHYLDIPHENYLAMINE.[1]

MEETING OF DECEMBER 8, 1875.

The mixture of alcohol with the substance, used for the manufacture shall be effected in the following proportion:

	Kilograms.
Diphenylamine	25
Hydrochloride acid	20
Alcohol at 96°, having previously received the addition of 5 per cent of benzine	20

This mixture shall be introduced in the boiler in the presence of the officer.

ALCOHOLS INTENDED FOR HEATING AND ILLUMINATING.

MEETING OF FEBRUARY 12, 1879.

Alcohols intended for heating and illuminating shall be methylated by means of methylene in the proportion of one-fifth the volume of alcohol.

TABLE OF CONTENTS.

	Paragraphs.
Factories to which regulation A applies	1
Factories in operation:	
Superintendence	2
Office of employees	3, 4
Internal communication	5
The right of visit and verification:	
Gauging and putting up of the fixed receptacles	6
Tubing	8–11
Receptacles of alcohol—Rectifiers—Indicators of level	12–15
Purpose of each vat	16
Testers	16
Counting devices	17
Receiving tank—Weighing machines—Weight	18–23
Putting up, numbers, capacity, and dead weight of casks	24–30
Gauging vats	36–43
Verification in the interior of the gauging vats	36–43
Closing and plumbing—Padlocks—Nippers	45–51
Raw material:	
Account of molasses	52–57
Previous declaration—Minimum output	58–61
Register of fermentation charge	62–65
Control of the alcoholic strength of the fermented matters—Densities—Samples	66–74
Imperfect alcohol introduced into fermented juices—Discharge in the military account	75–76

[1] Ethyldiphenylamine is a coloring product derived from coal.

Paragraphs.

Fermenting substances:
- Definition of the two authorized modes of entries in the general account of manufacture 31-44
- Distilleries in which the account is regulated according to the first method 77-81
- Verification of lees in the gauging vats, or on issuing from those receptacles 77-81
- In introduction into the verification of lees in the gauging vats, or on issuing from those receptacles 77-81
- Introduction into the lees of matter apt to lower their degree 77-81
- Taking charge of the quantities of lees extracted from the gauging vats—Deduction of the quantities of alcohol added to the fermented juices. 77-81

General account of manufacture:
- Distilleries in which the account is regulated after the second method . 82-87
- Taking in charge at the minimum according to the output declared by the distillers 82-87
- Lees obtained on the spot 82-87
- Taking in charge of quantities in excess ascertained by means of inventories 82-87

Rectification of lees and imperfect product:
- Product from abroad 82-87

Storage accounts:
- Declaration 88
- Charging of apparatus 89
- Product of rectification 90-91
- Storage account 92-93
- Partial verification 92-93
- Transfer into casks of spirituous liquors contained in the fixed receptacles 92-93
- Residues from rectification 94-104
- Storage register 105

Losses in material:
- Molasses 108-111
- Fermented liquors 108-111
- Spirituous liquors 108-111

Issues from the factories:
- Declarations of quantities taken out 112-116
- Verification 112-116
- Discharge in the general account and in the storage account 112-116

Stock taking in the store:
- Quantities in excess 117-120
- Deficit 117-120
- Calculation of the deduction for the annual operating period 117-120

General inventories:
- Quantities in excess 121-130
- Deficit 121-130
- Deficit in output—Waste in rectification 121-130
- Proposition of discharge 121-130

General provision:
- Space of time within which the declaration must be received 131-135
- Putting the regulations into operation 131-135
- Declarations of option between the two modes entry 131-135

GENERAL DIRECTIONS OF INDIRECT CONTRIBUTION.

[Circular 275, September 22, 1879.—Fourth Division, First Bureau.]

DISTILLERIES.

Regulation A of September 18, 1879, on industrial distilleries—Instruction for its application.

The regulations of the 18th and 20th of July, 1878, have given rise to complaint, owing to which the minister of finance has caused the application of some of their provisions to be postponed, and has instituted a commission in order to hear distillers.

The regulations of August 26, 1876, for which those of 1878 have been substituted, had already been the subject of criticism, which bore especially on two points: Formalities attached to the keeping of a general account of raw material, and employment of closed vessels to receive the product of every kind.

In abandoning the account of raw material and restricting to the lees the obligation for the distiller to keep his product in close receptacles, the administration had been forced to require guarantees. It had all the better reason to believe that the measures enacted by the decrees of 1878 had contained nothing impracticable, because they had been proposed by a commission which included two distillers whose competence could not be called in question.

The protest which the industrial and agricultural distillers have raised against the regulations which are applicable to them relates especially to the provisions regarding the plans, the weekly declaration which they have to make at the receivers office, the keeping of the fermenting register, and the discharge of the waste of rectification.

The commission appointed to listen to the representatives of the industry and to seek for the modification which, without jeopardizing the collection of the tax, might be introduced into the regulations of 1878, has been of opinion that, owing to notable differences existing both in the plans and in the processes of manufacture in use in distilleries, the new regulation arrangement had better be classed in three distinct decrees.

The council of state, which had already recognized last year the advantage offered by a set of regulations adapted to the special conditions of each group of industry, has entered into the views of the administration. The two sets of regulations the text of which it has adopted are designated by the letters A and A bis. They have been approved by the President of the Republic. A third set of regulations will be further promulgated, which will apply to distilleries of wines, etc., to the other distilleries delivering their product directly to consumption, and where the administration shall not have deemed it proper to establish a permanent service, owing to the small importance of the manufacture, and, finally, to all the itinerant distilleries.

Article 1.—Factories to which regulation A applies.

1. Regulation A, which I have had printed after the present circular, bears the date of September 18, 1879. Its first object is to define the factories to which it applies.

They are those which, under the system of permanent superintendence, rectify lees or imperfect spirits manufactured in other establishments, or which use, under the same system, material other than wine, cider, berries, lees, mash, and fruits obtained by simple distillation, or, by the operations of rectification, products suitable for delivery directly to consumption.

Article 2.—Factories in operation. Superintendence.

2. Officers are authorized by article 235 of the law of April 28, 1816, to visit the distilleries during the night, when it appears from the declaration that these factories are in operation.

According to article 2 of regulation A, these establishments are considered as in operation when there exists in the shops substances in fermentation or liquids capable of being distilled or rectified.

Office of employees.

3. The execution of the duties of the service requires that a furnished office room be provided for the officers charged with the function in the factories. Article 3 of the new regulation fixes neither the dimensions nor the locality of this office, but it stipulates that a convenient room be provided for this within the precinct of the distillery. Two chairs, and table with drawer provided with lock and key, must, moreover, be placed at the disposition of the employee of the service near the tester.

4. The rent of the office room and of the furniture will be paid by the administration. In case of difference regarding the fixation of the amount of this rent, the prefect will decide.

Article 4.—Interior communication.

5. The former regulation prohibited all internal communication not only between the distilling shop or the rectifying shop and the neighboring building not occupied by the distiller, but also between these shops and the rooms in which the distiller might practice some other industry.

Article 4 of the new regulation maintains the first part of this provision. For the second, it restricts the prohibition to the building in which the manufacturer carries on either the manufacture or the trade of the sale of fermented beverages other than alcohols, or the preparation of liquors or aromatic brandies, such as absinthe, or beverages similar to absinthe, etc., the present legislation no longer granting any waste of rectification for this preparation.

According to the demands of the delegates of the industry, the regulations require that in case where the house of the distiller is not separated from the manufacturing shop by an internal court, all direct communications between these shops and the house or its dependencies shall also be prohibited. (Sec. 2 of art. 4.)

When it is required, the distiller is bound to comply with these regulation provisions within the space of one month and to cut off communication by a masonry wall.

Article 5.—Gauging and putting up. Numbers and capacity of vessels.

6. The provisions of article 5 refer to the gauging and numbering of vessels. They are already in use in the distilleries through the application of article 17 of the law of April 28, 1816.

The number and the capacities must be painted in oil on

every receptacle in characters at least 5 centimeters high, under the care and at the expense of the distiller.

Article 6.—Utensils, means of verification.

7. The distillers are bound to furnish the workmen and utensils necessary both for the weighing and the measuring of molasses and products of all kinds, and for the gauging of the vessels and other receptacles.

Articles 7 and 8.—Tubing intended for the circulation of the alcohol.

8. The obligation formerly imposed on distillers to furnish the interior plan of their factories is not maintained; but as it is essential that the superintending agent shall know the direction of the tubing intended to effect the circulation of the products of distillation and of rectification, the new regulations, like the former ones, require that this tubing be painted in red.

9. Every tube must be set up under such conditions that its total course can be followed with the eye, and that no opening can be made in it without previous notice having been given thereof to the employees by the distiller.

10. The distiller shall then name a declaration indicating for every tube its number in order, its length, its point of departure, and its point of arrival. The number in order shall be painted and punched in a very apparent manner near every point of connection.

11. The director shall insist that the declaration mentioned in paragraph 10 be furnished in duplicate within the space of time fixed by article 8 of the regulation.

One of the two copies shall be kept by the chief of the service; the other shall be filed in the archives of the director's or of the subdirector's office. The same is true of the declarations of amendment which are to be furnished in case of further changes.

The rendering of each declaration shall be verified.

Article 9.—Receptacles of alcohol; rectifiers; indicator of level.

12. Every receptacle intended to hold alcohol, including the boiler of each rectifier, must be provided with a glass indicator so arranged as to present on the outside the level of the liquid. The scale of this indicator must be graduated in centimeters.

13. For receptacles other than the rectifying apparatus, the indicator may be replaced by a metallic gauge also graduated to centimeters. The gauge must admit of being readily introduced to the bottom of the vessel by two openings introduced for this purpose in its upper part at the point indicated by its officers. These points shall be so calculated that the double notation resulting from the introduction of the gauge in each opening shall give correctly the mean height of the liquid, even if the vertical position of the receptacle has been accidentally disturbed.

Article 10.—Purpose of each receptacle.

14. The purpose of the receptacle in which the spirituous liquors are placed must be indicated by one of the following notations:

Lees.

Alcohol to be redistilled.

Finished alcohol.

Essential oil.

The designations must be fixed on the receptacles under the same conditions as the numbers and capacities (sec. 6).

Article 11.—Alcohol found outside of the tubing, the receptacles, and the casks declared and set up under the regulation condition.

15. The legislation previous to the regulations of 1876 allowed the distillers to deposit the product of their manufacture in receptacles which were not always placed in evidence, and the destination of which was not indicated in any way, so that the verifications might be rendered very long and very complicated. It was not even possible to detect the quantities withheld except after a general inventory taken in the presence of the manufacturer, who, under a pretext of a mistake or forgetfulness, always tried to justify that which in reality was often merely a voluntary confusion intended to admit fraud.

According to the new regulations, any alcohol found either in the tubing or in receptacles other than those mentioned in 7, 8, 9, and 10 of these regulations (secs. 8, 9, 10, and 14 above), or outside the casks inscribed in the storage register, the keeping of which is prescribed by article 33 of the same regulation, shall be regarded as fraudulently manufactured and shall be seized.

Article 32.—Testers; tasting.

16. Article 32 of the regulation, moreover, forbids the taking at the testers of any quantity of lees or other products except for purposes of tasting.

Article 12.—Counting apparatus.

17. The old regulation authorized the administration to cause to be installed in distilleries, at the expense of the manufacturer, counting devices to measure the liquids issuing from the distilling or rectifying apparatus.

Article 12 of the new regulation maintains this authorization; but it places the cost of the installation of counting devices to the account of the excise.

Instructions will be given hereafter if there is need for the application of this article.

Article 13.—Receivers.

18. Henceforward distillers who have not conformed to the provisions of the old regulation shall be legally notified to satisfy the provisions of article 13 of the new regulation, which imposes on them the obligation to cause to be installed at their expense the verifier of weights and measures.

19. The scale of each receiver shall be graduated by hectoliters in its upper part and by fractions of a liter in its lower part for a capacity of at least 1 hectoliter. The space from one division to the other shall not be less than 3 millimeters. All the indications of this scale shall be easily legible.

20. The receivers at present in use in the distilleries, whatever be their form and capacity, may be admitted after verification by the service of weights and measures (par. 4 of art. 13).

21. Whatever be the precision of the receiver, it would be easy to falsify its indication, either by continuing to need it in proportion as it is emptied, or by putting it into communication with the cask to be filled before the overflow begins to run. The service must be on its guard against such abuses.

Independently of the special issue of the overflow, the receiver must have no other openings than those which serve to fill and empty it.

When a cask is to be filled, the stopcock through which

the receiver is emptied can not be opened until the stopcock fitted to the filling tube has been closed and the overflow has been completely emptied.

22. At the option of the distillers the filling of the cask is effected either previously by means of water, or by pouring in alcohol at the moment the casks are filled.

23. Under the terms of the same article 13, a pair of scales and weights must be placed at the disposal of the employees for weighing alcohols and casks.

Scales—Weights.

24. According to the law of June 21, 1873, "the declaration of taking out of alcohol and spirituous liquors shall show the capacity of every cask and the degree, with a number corresponding to that placed on the cask."

Article 14.—Number in order; capacity, dead weight, and gross weight of the casks and kegs.

25. Article 14 of the new regulation completes this provision in about the same terms as the old regulation A. It requires that casks and kegs of any kind used for storing and transporting products of any kind and of any origin shall present the mark indicating their number in order, their total capacity, their dead weight (weight when empty), and their gross weight.

26. These indications are painted or marked with fire or the brand iron. They are reproduced on the records, which shall specify, moreover, the quantity and the degree of the spirituous liquors contained in each keg (see sec. 113).

27. The operations regarding the weighing of the empty cask, its filling with alcohol, and ascertaining the gross weight, shall follow each other without interruption. That is an essential provision. In fact, it is readily understood that if after ascertaining the dead weight of a very wet cask it were allowed to dry before filling, the weight which it would have lost in drying would mash a corresponding weight of alcohol when the gross weight was ascertained. Furthermore, whenever the officials can have an opportunity to verify by filling casks that have been weighed or not weighed when empty coming from distilleries and bearing thereafter the indication of their dead weight, they shall make sure of the exactness of this indication.

28. The ascertaining of the dead weight of the casks and their gross weight has not only for its purpose to facilitate the recognition of the identity of the charge; but it furthermore offers a valuable element of control as regards the indications of the receiver. In fact, it suffices to note the degree of the spirituous liquors the effective weight of which is known, in order to determine, by means of the table[1] of volumes corresponding to every apparent degree of the alcoholometer, the volumes of these alcohols which they represent.

29. The employees who have been present at the filling of a keg and who have noted its dead weight and gross weight shall immediately fix on one of the heads of this keg a label, which the distiller is not allowed to remove. They shall reproduce on this label the number in order, the dead weight and the gross weight of the cask, and the vol-

[1] A table of this nature and a practical instruction will be shortly addressed to the service.

ume and the strength of the spirituous liquors, and they shall follow up the verification with their signatures.

If after the affixing of this label the conditions of the filling are modified, another label indicates accurately the new situation.

At the moment when the keg is shipped from the factory the label is completed by writing on it the number of the permit.

Article 15.—Distillers who merely rectify products coming from abroad.

30. The new regulation does not impose the obligation to rectify inclosed vessels on distillers who restrict themselves to receiving products from abroad.

The account of the manufacturers is, and remains, charged with the quantity of alcohol which these products represent, according to their volume and degree (secs. 85, 86).

The administration or the ministry decides on the waste of rectification under the conditions provided by article 38 of the regulation (secs. 126, 127 of the present circular).

Distillers who manufacture lees.

31. According to article 15 of the new regulation, the other distillers have the choice, for the entry in the general manufacturing account, between the two modes defined hereafter.

32. In the first mode the entry comprises, on the one hand, the quantity of alcohol contained in the lees obtained on the spot. This quantity shall not be less than the minimum declared in the execution of articles 141 of the law of April 28, 1816, and 9 and 10 of the law of July 20, 1837. On the other hand, the entry shall comprise the quantity of alcohol contained in the product received from abroad.

33. In the second mode the minimum output declared in execution of the law cited above and the quantity of alcohol contained in the product coming from abroad constitutes the element of the entry, and this entry can not be less than the result of the rectification.

34. The declaration of options shall be made by distillers within the space of time and under the conditions determined by the last three paragraphs of article 15.

The option shall be valid for at least one operating season. It shall continue effective so long as a declaration of amendment shall not have been sent to the chief of service of the factory.

Mode of entry in the general account of manufacture.

35. In the first mode only the distillation is carried on in closed vessels (see par. 32). The product of rectification and the lees received from abroad are deposited in receptacles arranged as prescribed in article 9, but not sealed or in kegs. The distiller submits to the decision of the administration or of the minister for the management of waste of rectification (pars. 125, 126, 127).

Gauging vats.

36. In factories subject to this first mode of entry, the receptacles or gauging vats into which the lees are directed when issuing from the cooler shall be isolated and rest on free supports, so that the superintending agent may make sure that no tube conduit not reported has been fitted thereto. They shall be closed and shall not communicate with the still, and, if need be, with the receiver, except by tubes fitted as prescribed in paragraphs 8 and 9.

37. The gauging vats shall be provided with two scales

graduated to hectoliters. If the height of the receptacle allows the space from one division to the other to be at least 3 millimeters, the graduation shall be made by decaliters or by liters.

The gauging vats shall be set up in such way that the indications of the scale can not be lessened by the displacement of level. The distiller is bound to fix these scales on the point designated by the employees.

38. The scale may be replaced by a metallic stem graduated on one of its faces like the scales themselves and on the other face in centimeters. This stem or scale shall bear a number corresponding to that vat to which it relates. It must admit of being introduced into the vats by two openings made under the conditions specified in paragraph 1 *e*.

39. The points of junction of the tubes which connect the gauging vats among themselves and with the cooler, and if need be with the receiver, can not be disconnected except in the presence of the employees. These agents may fix on the sleeves forming the connection a lead or a seal, which the distiller can not remove.

40. The openings made in the gauging vats shall be closed by sealed covers, as is said in the preceding paragraph.

41. The stopcock fitted both to the tube and to the gauging vats shall be kept closed either by a padlock or by a lead, or by any other means adopted by agreement between the service and the distiller.

42. On condition of being closed, padlocked, and furnished with gauges or scales conformably to the prescriptions, the receptacles at present in use to receive the lees on issuing from the coolers may be admitted as gauging vats.

Verification in the interior of the gauging vats.

43. The employees are authorized to verify the interior of the gauging vats in order to make sure that no tube has been clandestinely fitted to these receptacles or hidden in the thickness of their support. They may require that the distiller cause such vats as they wish to submit to this examination to be clean when they are empty. In case of suspicion, they are furthermore authorized to cause to be emptied and cleaned full vats or vats that are being emptied, whenever the work of distillation is interrupted for forty-eight hours at least.

Second mode of entry in the general account of manufacture (art. 18).

44. In the second mode of entry (secs. 31 and 33) the products of distillation and of rectification are conducted as they issue from the cooler into closed receptacles which do not communicate among themselves and with the stills except by tubes without any other solution of continuity than that which exists for the tester.

The receptacles of finished products, and the tubes by means of which these receptacles are placed into communication among themselves and with a cooler, shall be set up like the gauging vats intended for the lees manufactured in establishments placed under the first system of entry. The provisions of paragraphs 36 to 43 are applicable to them. On the proposition of the directors the administration may, furthermore, cause to be sealed under the conditions provided by paragraphs 39, 40, and 41, the

receptacles of lees and other products to be redistilled, as well as the tubes which connect them among themselves or with the coolers and with the still, whenever these receptacles and these tubes are not placed under the eyes of the employees in the room containing the distilling and rectifying apparatus.

When the distiller operates only on products of his distillation, the waste of rectification shall not cause any notice to be taken on the part of the administration or of the minister, inasmuch as this waste can not appear in the general account, which, having been established first of all on the minimum of output declared, is definitively charged, pursuant to the general inventories prescribed by article 37, only with the products of rectification themselves.

Article 20.—Nippers, leads, padlocks.

45. The padlocks, nippers, and leads shall be furnished gratuitously by the administration.

46. Distillers conforming themselves to the indications given by the employees shall take at their cost the measures necessary to have the padlocks and leads properly placed.

Ticket of control.

47. The padlock used closes automatically by introducing the iron bow in the copper armature. It receives a ticket of control, which is fixed above a disk by means of a plate which has to be lowered before closing the padlock.

This padlock is opened with a key with a ward which acts with a lever on a spring.

At every opening the disk rises, and the five beveled pins with which it is armed perforate the ticket, which must not be broken by the distiller under any pretext.

48. This ticket is detached from a register with stub (No. 11). It bears a number in order, the date, and the hour of the closing of the padlock, as well as the signature of the employee who has performed this operation.

49. After opening the padlock the ticket is attached to the stub of the register opposite its number of order, on a gummed sheet provided for this purpose.

50. On the stub of each ticket there shall be inscribed the name of the officer who has closed and opened the padlock, the date, and the hour of closing and opening.

51. Every employee who has opened the padlock and withdrawn the ticket of control is bound to assign the reason why he opened it.

As a matter of principle, the opening of a padlock placed at the stopcock of discharge of a gauging vat must correspond to an entry of alcohol.

Article 22.—Accounts of molasses.

52. The regulation A requires the keeping of an account of raw material only for molasses. This account may be followed on schedule No. 50 A, arranged for this purpose.

53. Every introduction of molasses must be justified by the presentation of a permit.

54. The quantities recognized on arrival by the employees shall be entered in the account of raw material.

55. From this account there shall be successively canceled the quantities subjected to fermentation (sec. 74 hereafter) or shipped in their natural state under permit.

56. The employees shall be free to take account of remainders as often as they deem necessary.

The quantities in excess noted at each taking of stock shall be added to the charges, and the deficit shall be entered as discharges.

57. Distillers can not be held responsible for the output in alcohol corresponding to the deficit of molasses. The sugars represented by these deficits alone shall be subject to tax. They may be relieved of this tax by the administration on sufficient justification and on the proposition being supported by reasons of the directors.

Article 23.—Declaration of manufacture; minimum of output.

58. The law of April 28, 1816 (arts. 117, 118, 140), obliges distillers to make, previous to any manufacture, a declaration indicating the situation of their factories and the composition of their materials of manufacture.

59. Independently of this declaration, the distillers are bound to present to the office of the excise, two weeks at least before the beginning of every operating period, a declaration showing the number of working days, the minimum output of alcohol per hectoliter of fermented liquor which will be subjected to distillation, and the hour at which every day the heating of the distilling or rectifying apparatus will begin and cease, if the work is not to be continuous.

60. Any modifications in the conditions of manufactures as regards the minimum of output and the time during which the distillery will work every day shall be declared to the permanent employees in the factory.

61. The declarations specified in the two preceding paragraphs are received on register No. 1 of the series of the service of distilleries. They will be completed by the indications of the register of fermenting charge.

Article 24.—Register of fermenting charge.

62. The register of fermenting charge bears No. 3 of the series of special blanks. It will be furnished gratuitously by the administration and filled out by the permanent employees in the factory according to the declaration which shall have been made to them by the distiller. If the latter prefers to keep the register of fermentation himself, he must exhibit it on every demand of the superintending agent appointed.

63. The register of fermenting charge must show, without interruption of gap and without erasure of writing.

(1) At the moment when the juice and the substances begins to be poured into the vats—

The number and capacity of that vat.

The date and hour of the beginning of the operation.

(2) At the end of the charge of each vat—

The hour at which this charge ended.

The waste of farinaceous matters and the weight of molasses.[1]

The volume of the juices and the macerated substances.

(3) When the fermentation is ended—

The date and the hour when the fermentation ceased.

[1] See section 7; see also practical instruction of memorandum book No. 5 A for the case when maceration and fermentation are effected in distinct vessels.

(4) In proportion as the contents of each fermenting vat are distilled—

The date and hour when the fermented liquid begins to be extracted.

The hour at which the extraction has ceased and, as the case may be, the quantity of liquid desired for the new charge.

64. If the vats are not entirely filled, then the volume of the juices and the macerated substances really introduced in each vat must be inscribed in the register.

65. To calculate the minimum output in alcohol this volume must be diminished, if need be, with the quantity of liquids preserved for another charge, so that this calculation shall be applied only to the juices or to the macerated substances really subjected to distillation.

Controller of the alcoholic strength of the fermented substances. Densities; samples.

66. From experiments made to determine the specific gravity of sugar[1] and the relation existing between the density of sugar solutions and the quantity of sugar which they contain, it results that this quantity is not absolutely in proportion to the density of the liquid. It diminishes in proportion as the density rises, but it nevertheless does not fall below 2.68 kilograms per hectoliter, and per degree of density above 100 of a liquid exclusively composed of sugar and water (the densimeter of the excise marked at 100°, the density of the water at the temperature of 15°).

It is known, on the other hand, that with 100 kilograms of sugar must be radically produced 51.12 kilograms of alcohol, but in practice the actual output does not notably exceed two-thirds of the theoretical output, or about 36 kilograms of alcohol for 100 kilograms of sugar.

Now, as the liter of anhydrous alcohol weighs only 0.7947 kilograms at the temperature of 15°, the quantity of alcohol (0.9648 kilograms) that can be obtained in industry per degree and per hectoliter of fermented juice represents 1.214 liters, or, in round numbers, 1.2 liters.

67. It therefore suffices, as it appears in order to estimate approximately the alcoholic strength of these macerations and to show the volume of these macerations and their density before and after their fermentation, the difference of the density observed at each of these phases representing the quantity of sugar decomposed and transformed into alcohol.

Article 25.—Density of juices; samples.

68. Distillers are not bound to declare the density of juices and substances before and after fermentation. Article 25 of the new regulation reproduces the provision of article 20 of the regulations of July 18, 1878, according to which it is incumbent on the officials to note themselves this double density, they shall inscribe as the memorandum on the inspection book, 5 A.

These verifications are essential; they must be made many times and made with great care.

69. Employees are authorized to take, when they deem it necessary, samples of the fermented liquids, in order to submit them to the testing alembic.

[1] Facts observed in the study of sugar by Mr. Maumene. (Memoirs presented to the Chemical Society, 1874.)

70. The result of the distillation of these samples and the theoretical output based on the elements which memorandum book No. 5 A presents will enable the service to control both the minimum declared and the actual output noted at the issue from the gauging vats.

71. For farinaceous substances without mixtures of other substances, the minimum of output, the declaration of which is prescribed by article 23 of regulation A, shall not be less than the percentage determined by the last paragraph of article 9 of the law of July 20, 1837 (2½ liters of alcohol per hectoliter of macerated material); but whatever be the theoretical output resulting from the difference of densities noted before and after the fermentation, the law does not allow that a declaration above that proportion be required.

72. The law fixes no minimum for the other substances. When the declared output is notably below the actual output, the officers must make note of the result of their experiences in order to induce the distiller to reform his declaration. The important point especially is that nothing be neglected to assure the entry of the entire product of distillation.

73. The distillers are bound to declare the weight of the farinaceous matter and molasses employed in charging the fermenting vats (par. 63). Their declarations must be controlled by the superintending agent.

74. For molasses, the administration allows that, in default of actual weighing, the weight declared by the manufacturer shall be controlled by means of a calculation based on the density of this molasses and that of the liquids prepared for fermentation.

In general, the distillery molasses indicate 41° or 42° Baumé, which is equivalent, in the mean, to a specific gravity of 1,400 grams per liter, or 400 grams more than that of water, which is 1,000. They are submitted to fermentation until after being diluted, and the density of the product of dilution approaches more nearly to 1,000 as the quantity of water employed is greater.

This being premised, in order to estimate the original quantity of molasses obtained in the dilution of molasses prepared for fermentation and not yet having received any addition of other material, the following proportion has to be established: 400 grams (difference between the density of normal molasses and the density of water) : 1,400 (density of molasses) :: x (difference between the density of diluted molasses and the density of water) : to x (original molasses contained in the production of dilution).

Thus for a mixture of—

	Grams.
1 liter of normal molasses	1,400
4 liters of water	4,000
5 liters	5,400
The density (one-fifth)	1,080

We have:

$$400 : 1{,}400 :: (1{,}080 - 1{,}000 = 80) : x = 280 \text{ grams.}$$

The ratio of 400 (difference between the density of water

and the density of molasses) to 1,400 (density of molasses) being as 1 to 3.5, we shall arrive at the same result if multiplying by the last figure the difference between the density of water and that of the mixture. In the preceding example, 80 times 3.5 equals 280 grams of original molasses per liter of diluted molasses.

The quantity of molasses, the raw material of which is taken into account to be discharged, would thus be at the rate of 280 grams per liter—28 kilograms per hectoliter of liquid intended for fermentation.

For further information I have had printed, after the present circular, a table which indicates for the densities from 1,001 to 1,100 (1° to 10°) the quantity of original molasses (at 1,400) contained in a hectoliter of dilution of molasses prepared for distillation. By means of that table one may obtain the quantity of molasses to be carried as discharged in the account of raw material by multiplying the volume of dilution by the figure corresponding to the density recognized before fermentation.

Article 26.—Auxiliary account.

75. Independently of the account of molasses, the account of fermentation, and the general account of manufacture, the following auxiliary account must be kept:

For products to be redistilled.

For finished products.

For residues or essential oil.

Article 27.—Imperfect alcohols introduced into the fermented juices.

76. Under the terms of article 27 of the new regulations A, the distillers who add to the fermented juices imperfect alcohol already entered must make a declaration of them to the employees. After every verification these agents carry to the discharge in the storage accounts the quantities of pure alcohol represented by these imperfect products (see par. 80).

Article 17.—Distilleries in which the general account of manufacture is regulated according to the first mode defined by article 15.

77. The quantity of alcohol represented by the lees manufactured on the spot in the factories where the entry is effected according to the first mode defined by article 15 shall be ascertained in the gauging vats or at the issue from those receptacles.

If they are not well mixed in the vats, the low wines do not present a uniform density at all heights. The denser part, whose alcoholic degree consequently is lower, naturally occupies the lower layer, and the lighter part, which in the alcoholometer indicate the highest degree, rises to the surface.

It is therefore essential—and this is a recommendation on which one can not insist too much—that, before taking liquids intended for testing, the contents of each vat be strongly shaken, in order that it may be mixed as much as possible.

If the mixture can not be conveniently effected, three weighings at least must be performed, the first at the beginning, the second at the middle, and the third at the end of the extraction of the contents of each vat. The means of these weighings would serve as the basis for entry.

The employees shall not proceed with their verifications until the stopcocks by which the distilling apparatus communicates with the gauging vats has been closed.

78. Distillers who have chosen the first mode of entry shall not introduce into the lees, before the verification on which this entry rests has been effected, any quantity of substances apt to lower the alcoholic degree of the lees, unless they furnish beforehand the means to ascertain the influence of these substances on the degree. Introduction into the lees of substances apt to lower the degree thereof.

In the latter case, the directors shall cause experiments to be made under the direction of a superior officer of the degree of controller at least, and they shall give notice of the results of the experiments under the stamp of the present circular.

79. When a distiller who is subject to the first mode of entry wishes to withdraw lees from the gauging vats, he shall make a declaration thereof to the employees.

The lees successively extracted from these vats shall be entered for the quantity of pure alcohol corresponding to the volume and to the degree ascertained by the service—

(1) In the general account of manufacture.

(2) In the storage account of the products to be redistilled.

In the case provided for by article 27 of regulation A, the quantity of alcohol added to the fermented juices is deducted from that which is subsequently recognized in the gauging vats; the difference forms the basis of the entry in the general account of manufacture.[1]

81. If in the case of a general inventory effected under the conditions provided for in paragraph 121 the quantities of alcohol successively entered in the general account of manufacture or of the distiller subject to the first mode of entry are lower than the minimum of output declared by that distiller, the employees shall make a complementary entry in that account under the head of dutiable deficit, applying the provisions of articles 15 and 17.

82. In the case of distillers who are subject to the second mode of entry provided for in article 15, the quantities of alcohol represented by the fermented juices subjected to distillation according to the minimum output declared are entered every day in the general account of manufacture. Article 19.—Distilleries in which the general account of manufacture is regulated according to the second method defined by article 15.

83. At the end of every day the lees arising from the distillation performed on the spot by the same distiller are entered for the quantities of alcohol which they contain in the storage account of products to be redistilled.

84. Applying articles 19 and 39 of regulation A, the quantities of alcohol in excess noted in the inventories taken in the distiller's establishment, the general account of which is regulated by the second mode defined by article 15, are added to this account. Nevertheless, they are not inscribed except under deduction of the waste that may arise from the rectification of the imperfect product comprised in the remainder (sec. 124).

85. In general, the rectifiers do not confine themselves to redistilling the low wines derived from raw material distilled in their factories; they furthermore practice the rec- Article 28.—Products from abroad.

[1] See practical instructions of register No. 2 for the case when the deduction can not be made all at one time.

tification of low wines and imperfect products which they obtain from abroad.

According to article 28 of the new regulation, the product of that origin must be presented to the verification of the service.

86. In all distilleries the quantities introduced shall be entered in the general account of manufacture. They shall furthermore be entered either in the storage account of products to be redistilled or in the storage account of finished products, as the case may be.

87. If the products received from abroad are contained in kegs, and if they are not immediately mixed with the spirituous liquors manufactured on the spot, the employees who have performed the verification will attach a label on each one of these kegs.

This label, which the distiller can not remove, shall indicate the number in order of the keg as well as the quantity and degree of the spirituous liquors therein contained.

Articles 29 and 30.—Redistillation of low wine and imperfect products.

88. It does not suffice to make sure of the entry of product from abroad and of home product intended for rectification; the service must also be enabled to be present as these products are distilled at the charging of the apparatus, and thus be able to prevent the maneuvers which would consist in clandestine removal in the hope of obtaining clearance of deficiencies under the head of waste of rectification.

For this purpose the distiller who wishes to submit a redistillation of low wine or of spirits of any origin shall be bound to make a declaration thereof before beginning to charge the rectifier.

The declaration shall state—

(1) The nature, volume, and degree of the low wines and products to be redistilled.

(2) The number of vessel whence these products are to be taken.

(3) The number of the rectifier, the date, and the hour of charging that apparatus.

89. The quantities introduced in the rectifier will not give rise to any record in the general account of manufacture (Schedule No. 8), inasmuch as that account shall only show the discharges of quantities of spirituous liquors shipped abroad or the deficit which has been put on record.

They shall only be carried as discharged in the storage account (Schedule 50 A).

90. The products of rectification shall be entered at the end of every day for the quantity of alcohol which they contain, either in the storage account of finished alcohol or in the storage account of products to be redistilled, as the case may be.

91. For the purpose of making sure of this entry, and preventing diversion, the agent appointed to superintend the matter shall often note in the special memorandum book No. 5 and in the storage register No. 9 (sec. 105) the state of the receptacles which contain spirituous liquors.

In general, the status of the products contained in the receptacles of large dimensions shall be put on record during

the days at least every two hours. The agents of control shall take care to compare the results of their own verification with those which have been put on record by the employees, and to assure themselves whether they agree.

Transfusion into kegs of spirituous liquors contained in stationary receptacles.

92. Alcohols contained in stationary receptacles can be placed in kegs only after the distiller has made a declaration thereof to the employees.

93. The weight and capacity of the kegs shall be ascertained under the conditions determined by paragraphs 18 to 27 of the present circular.

Article 31.—Residues of rectification.

94. The residues of rectification, which are designated under the terms essential or empyreumatic oils, contain but little alcohol, but their density approaches that of spirituous liquors of high degree, so that it is easy to confound them with bad-tasting spirits. Thus it was necessary to take precautions lest they might be substituted for ordinary alcohol, either on taking out of the factories or in the circulation.

According to article 31 of regulation A, the residues of rectification which are not intended to be redistilled once more shall be entered into special accounts—

(1) For their total volume.

(2) For the degree recorded by the alcoholometer.

(3) For the quantity of alcohol corresponding to that volume and to that degree.

(4) For the quantity of pure alcohol which they really contain after the elimination of the essences.

95. To ascertain the latter quantity, the employees shall use a graduated tube, in which they shall introduce a mixture composed of two parts of water and one of the liquid to be tested. After stopping the orifice of the tube with the hand, they are to shake the mixture and let it rest for some time.

The essence having thus been isolated in an upper layer, it will be possible to recognize on the one hand the volume of the essence, and on the other hand the volume of alcohol and of the water with which that alcohol may have combined.

For this purpose the essence is to be decanted by means of a pipette, so as to completely separate from it the mixture of alcohol, the degree of which is afterwards to be ascertained by the ordinary processes. If necessary, several tests are to be made in order to liberate a quantity conditioned for the working of the alcoholometer.

Supposing that 20 centiliter of residues of apparently 86°, to which 40 centiliters of water have been added, have been tested once or several times, and that the essence which floats on top represents 4 centiliters, and that the remainder of the mixture (56 centiliters, including the water) marks 2° of the alcoholometer at the temperature of 15°, the test will have shown that the residues tested contained 20 per cent of essence and 5.6 per cent of alcohol.[1]

96. When the residues of which there is question are taken

[1] 20 : 4 : : x equal to 20 per cent: 0.56 liters at 2° equal to 1.12 centiliters of alcohol. 20 : 1.12 : : 100 : x equal to 5.6 per cent.

from the factory, the permit which accompanies them reproduces the fourfold indication prescribed by paragraph 94.

In the general account of manufacture the quantity of pure alcohol really contained in the residues taken from the factories is discharged. These residues, furthermore, are marked discharged in the special account, both for their total volume and for the quantity of alcohol corresponding to degree recorded before and after the elimination of the essence.

Essential oils not containing more than 6 per cent of alcohol. Freedom from duty.

97. On principle, any liquid which contains any quantity whatever of alcohol is subject to duty proportional to its alcoholic strength. But the administration has always thought that it would be too rigorous to impose the tax on the quantity of alcohol contained in the residues of distillation, and which can not be extracted except at great cost from the fat bodies with which it is mixed.

The freedom from tax which products of that kind have thus far enjoyed under the denomination of essential oil ought not, it seems, to be taken from them. But in order to prevent abuses, the administration, after experiment made on samples taken in various factories, has deemed proper to fix at 6 per cent the maximum of alcohol permitted to be tolerated in the residues in question.

98. The immunity from tax shall, moreover, be subject to the condition that the product to which it applies shall be employed on the spot, either for illumination in the distillery or for an industrial use, or shall be shipped with permit to industrials not interested in the trade in spirituous beverages, to be used under the same conditions under the superintendence of the agent of the excise.

99. In the latter case the permit shall not be discharged free except after the identity of the residues has been ascertained and the administration has made sure that they do not contain more than 6 per cent of pure alcohol.

For this purpose, samples taken, both on departure and on arrival, shall be transmitted to the administration under the stamp of the present circular. Every number shall bear a label recording the name and residence of the sender, the name and residence of the addressee, and the name and date of the permit.

100. In communicating to the director of the place of destination the result of the analysis of the two samples, taken conformably to the preceding paragraph, the administration shall inform him of the condition to which the discharge of the deed of transportation shall be subject.

Essential oils of an alcoholic degree above 6 per cent.

101. Residues of an alcoholic degree above 6 per cent are subject to duty like ordinary alcohol, according to the strength indicated by the alcoholometer.

102. The obligation to take samples of the residues of rectification shipped from the distillery is intended to prevent substitution, to which allusion was made in paragraph 94.

In the same order of ideas, the last paragraph of article 31 provides that the distiller shall not obtain the discharge of products of that kind shipped to wholesale dealers in beverages except on condition that these residues are

entered at the place of arrival under the same conditions as at the place of shipment.

103. When wholesale dealers reship the residues which they have received under these conditions, new samples shall be taken and the officer shall proceed conformably to the preceding provision.

104. In case these dealers refuse to submit to the formalities imposed by the regulation for the entry and for the circulation of the residues which they introduce into their magazines, the discharge of the permit submitted by the shipper would be suspended. Information would be sent thereof to the administration under the stamp of the present circular by a special report.

The attention of distillers shall be called to this point. Thus informed, these manufacturers will be able to inform their buyers, when they ship to wholesale merchants, of the consequences which would ensue from their refusal to submit to the condition provided in the last paragraph of article 31 of the regulation.

Article 23.—Storage register.

105. With a view to facilitate the verification of spirituous liquors entered in one of the storage accounts, and to follow their movement, a storage register (No. 9) shall be kept for every distillery by the employees charged with superintending (art. 35).

The first part of this register is intended to present the status of each one of the large-sized vessels (except the gauging vats) set up in a stationary manner to contain the product of distillation and rectification.

In the second part of the same register the agent shall inscribe, after verification, the number in order, the dead weight, and the gross weight of every keg introduced into the store, the volume, and the alcoholic strength of the spirituous liquors (see secs. 28, 29).

106. In case of an accident necessitating a transfer to other receptacles, the employees of the service shall immediately be informed.

Every other transfer to other vessels shall be declared in advance.

107. The contexture of the second part of the storage register leaves no doubt as to the manner in which it is to be kept. All the kegs inscribed in the entries opposite the lines remaining blank at the clearances must be found in the stores. By means of this register the service will thus be enabled to establish surely and rapidly the situation of the stock.

Article 34.—Losses in material.

108. The administration will grant the discharge—

(1) Of the molasses.

(2) Of the fermented liquid.

(3) Of the spirituous liquors, the material loss of which shall have been regularly established by the employees.

In regard to this, the administration will decide on special propositions which shall be made to it for each case by the directors.

109. For molasses, the discharge shall be effected in the special account of these substances.

110. The fermented liquids, the loss of which has been

ascertained, shall simply be noted in the register of fermentation (sec. 63).

111. As regards spirituous liquors as a loss, they shall be carried as discharged both in the general account of manufacture and in the auxiliary storage account.

Article 35.—Declarations of liquors taken out.

112. Shipments made outside of the factory shall be the object of the most attentive superintendence.

The taking out of spirituous liquors shall previously be declared to the employees appointed as superintendents. These agents are charged with delivering the deed of transportation. For this purpose registers No. 2 (*b* or *c*) shall be sent to each chief of the service.

113. It has been recognized that the identity of the cargoes can not be efficaciously ascertained in the course of transportation or at the destination unless the deeds of transportation indicate, on the one hand, the number in order, capacity, the dead weight, and the gross weight of every keg; on the other hand, for every kind of liquor having the same alcoholic strength, (1) the degree of dipping of the alcoholometer and the temperature at which that degree has been recorded on starting, and (2) the alcoholic degree reduced to the temperature of 15° C.

Article 35 of the new regulation requires that distillers furnish these various items of information in their declaration of liquors taken out. The service shall take care to record them exactly on the permit, and to indicate, moreover, the empty space recognized on departure on every keg.

114. With records thus filed, not only substitution, addition, or subtraction of alcohol can be ascertained without delay at every point of the transportation of the cargoes, but the agents of the places of distillation will also have the means of deciding intelligently whether transportation shrinkage is to be allowed or refused.

115. The cargoes, the taking away of which has been previously declared, must be presented to the employees. The new regulations, as well as those of 1878, leave every latitude to distillers to effect, during the day, the verification which must precede the departure of the cargoes.

Discharge in the general account and in the storage account.

116. The quantities of pure alcohol contained in the product shipped shall be carried as discharged in the general account of manufacture (Schedule No. 8). They shall, furthermore, be inscribed as outgoing (Schedule 50 A) in the storage accounts of finished products or products to be redistilled, as the case may be. (For the residues of rectification see sec. 96.)

Article 36.—Stock taking of the products entered in the storage account.

117. At odd times the employees are authorized to put on record the status of the storage accounts—

(1) Of the finished products.

(2) Of the products to be redistilled.

(3) Of the essential oils.

118. The distiller shall be bound to fill the casks or kegs so that the officer shall have to make his verification only on a single cask, to be emptied for every species of products.

119. If no work of distillation or rectification has been done, then the excess that the stock taking shows over the

last entry in the storage account can arise only from an introduction or a clandestine operation, and shall be seized, conformably to the law of April 28, 1816.

In the opposite case, the excess shall be simply added to the charges as a product of the current work.

120. As regards deficit, they shall be relieved of tax only up to the amount of the deduction fixed in execution of article 6 of the law of July 20, 1837. That deduction shall be calculated for the annual operating season, beginning on October 1 and ending on September 30 of the following year.

The elements of the calculation shall be established, as for the wholesale dealers, on schedule No. 50 A and on register 50 B.

Articles 37, 38, and 39, general inventories of products of distillation and rectification.

121. Independently of the partial stock taking of the store, article 37 prescribes the taking of a general inventory of the products of distillation and rectification whenever the employees deem it necessary, and as much as possible when the apparatus is at rest.

122. For the columns of the general account of manufacture the quantities of alcohol inventoried shall be added, in the square where this balance is established on schedule No. 8, to the quantities already carried as discharged for some reason. The total of these different quantities shall be compared to that of the charges of all kinds (presumption entries, sec. 86—products manufactured on the spot; secs. 80, 81, 82—quantities in excess previously noted).

Excess.

123. In distilleries which use only products coming from abroad, and in those where the low wines manufactured on the spot are entered in the general account according to the first mode provided in article 15, the quantities in excess can only be derived from a fraudulent introduction or from a subtraction made in the gauging vats. Article 37 of the regulation prescribes that they be seized under the law of April 28, 1816.

124. In the establishments where the output in alcohol from the juices distilled on the spot is inscribed in the general account only for the minimum declared by the distiller (sec. 82), the quantities in excess appearing from the general inventories after the deduction of the waste which may arise from the rectification of the imperfect products comprised in the stock (a deduction regulated by an agreement between the service and the distiller) represent bonuses of output. On that account they are simply added to the charges of the general account conformably to the provisions of articles 19 and 39 of the regulation, recalled by section 84 of the present circular.

Deficit.

125. In all factories the deficits obtained by general inventories are immediately dutiable under the deduction acquired in the storage account.

126. Nevertheless, if it is ascertained that the deficits arise exclusively from deficits of output below the minimum declared, or from weight of rectification, the administration will grant the discharge thereof if they do not exceed 5 per cent of the entries.

127. When the deficits which have one of these kinds of

origin exceed the proportion in the preceding paragraph, or when the distiller protests against the decision of the administration in what concerns the deficit of 5 per cent and less, the minister of finance shall decide, after having taken the advice of the secretary of finances of the council of state (arts. 38, 39 of regulation A).

128. It is understood that the discharge of a deficit in the general account of the distiller in whose case the low wines obtained on the spot are entered in that account on issuing from the gauging vats (sec. 80) would not be entered as deficit of output except so far as a complementary entry has been made under the conditions provided in section 81.

Propositions for the discharge of deficit.

129. Except in the case where the director thinks he must take conservative measures with the previous authorization of the administration, whom he is to consult under the stamp of the present circular, the duties applicable to the deficit exhibited in the general inventories shall not be immediately put on record. In ordinary cases the administration or the minister will be enabled only at the end of the operating season to decide as to whether these deficits shall or shall not be exempt from duty. The statements of the inventory shall mention this reserve.

130. The propositions which the directors shall have to formulate in regard to these deficits will have to be in the hands of the administration and under the stamp referred to in the preceding paragraph at latest on November 15. They shall be drawn up on a special blank, which will be furnished as official paper. They will present the opinion and accompanying reason (1) of the chief of service of the factory in which the deficit has been noted, (2) of the comptroller, (3) of the special inspector, or in default thereof of the subdirector of the district, and (4) the conclusions of the director.

Article 21.—Declarations.

131. The declarations of profession and those which relate to the capacity of vessels in use in distilleries shall be made at the receiver's office at least two weeks before the beginning of the work of distillation or rectification.

132. Those which are prescribed by articles 7 (marked paragraph), 8 (last paragraph), 17 (second paragraph), 23 (second paragraph), 27, 29, 30, 33 (last paragraph), and 35 of regulation A shall be received by the employees. They shall be made at least two hours in advance (secs. 9, 11, 60, 76, 79, 88, 92, 106, 112).

Article 1.—Execution of the new regulation.

133. The new regulation shall take effect from October 1 next.

From and after that date the regulations of July 18, 1878, shall cease to be operative for the distilleries which are subject to the new regulations, but they shall continue to be applicable to the distilleries which deliver their products directly to consumption and to those which are not subject to the system of permanent superintendence. Nevertheless, until the promulgation of the third special regulation announced by the seventh paragraph of the present circular, these latter distilleries shall operate under the same conditions as during the operating season of 1878–79.

134. The new regulations A have been inserted in the official journal of the 21st of the current month. They have been printed separately and sent into the department in sufficient numbers to allow of one copy to be sent to each distiller whose factory is subject to permanent superintendence.

135. The manufacturers to whom the regulations apply shall be notified that they are to choose without delay between the two modes of entry defined by article 15 (secs. 31–44).

Before December 1 next the directors shall transmit to the administration, under the stamp of the present circular, two separate statements:

(1) Of distillers who have chosen the first mode.

(2) Of those who have adopted the second.

P. AUDIBERT,
Councilor of State, Director-General.

A true copy:

ROUCOU,
Administrator of the Fourth Division.

Decree of September 18, 1879, containing regulations of public administration regarding distilleries other than those which use wines, ciders, perry, lees, hulls, and fruits (industrial distilleries).

REGULATIONS A.

[Inserted in the official journal of September 21, 1879.]

The President of the French Republic, on the report of the minister of finance—in view of article 3 of the law of March 21, 1874, which reads thus, "A set of regulations of public administration shall determine the measures necessary to assure the collection of the duty in distilleries. * * * Contraventions against the provisions of these regulations are subject to the penalties enacted by article 1 of the law of February 28, 1872;" in view of the law of April 28, 1816 (notably articles 97, 100, 117, 118, 138, 139, 140, 141, 142, 235, and 236); in view of the laws of April 23, 1836, and July 20, 1837; in view of the law of February 28, 1872; in view of article 7 of the law of August 2 of the same year; in view of the decree of December 4, 1872; in view of the law of June 21, 1873; in view of the decree of July 18, 1872—with the agreement of the council of state, decrees:

ARTICLE 1.

The present regulations are applicable to distilleries in which the administration deems it useful to establish a service of permanent superintendence which rectify either low wines or imperfect spirits manufactured in other establishments by using substances other than wine, cider, perry, lees, hulls, and fruits obtained by simple distillation or, by operations of rectification, products suitable for being delivered directly to consumption.

It shall become effective from October 1, 1879.

From that moment onward the regulations of July 18, 1878, shall cease to be in force for distilleries which are subject to the new regula-

tions. The old regulations shall continue to apply to distilleries which deliver their products directly to consumption and which are not subject to the system of permanent superintendence.

ARTICLE 2.

The employees of the excise of indirect contribution are authorized to enter into distilleries at any hour of the day and night and there exercise a permanent superintendence when there are in the shops matters in fermentation or liquids suitable for being delivered for distillation or rectification.

ARTICLE 3.

The distiller shall arrange within the precincts of his shops for the service of the employees a convenient room as an office, furnished with chairs, tables, and a stove or fireplace. He shall, furthermore, place at the disposal of the employees of the service, near the tester which receives the alcoholic liquid on its issue from the distilling or rectifying apparatus, two chairs, and a table, with drawers that may be locked with a key.

The cost of the establishment of this furniture and of the office is fixed by private agreement, or, in default of amicable agreement, it is regulated by the prefect.

ARTICLE 4.

All internal communication between the distillery and the neighboring buildings not occupied by the distiller, or those in which the manufacturer practices either the manufacture or the commerce of fermented beverages other than alcohols, or the preparation of liquors or aromatic brandies such as absinthe or beverages similar to absinthe, etc., is interdicted and must be suppressed.

When the dwelling of the distiller is not separated from the manufacturing shop by an interior court, all direct communication between these shops and the house and its dependencies may also be interdicted.

The distiller is bound, within one month, beginning with the day when he has been notified by the administration, to cut off the prohibited communication.

ARTICLE 5.

The capacity of the boilers, stills, tanks, and vessels declared conformably to articles 117, 118, and 140 of the law of April 28, 1816, shall be verified by metric gauging and filling.

Every boiler, still, tank, vessel, and receptacle of any sort shall receive a number in order, with the indication of its capacity in liters.

The numbers and indication of the capacity must be painted in oil, in characters at least 5 centimeters high, under the direction and at the expense of the persons making the declaration.

ARTICLE 6.

Distillers are bound to furnish the workmen and utensils necessary both for the gauging of the vessels or receptacles and for the measuring of the molasses and the products of all kinds at the inspection, the stock-taking, the taking of the inventories, and the verification of the cargoes on departure and arrival.

ARTICLE 7.

The tubes in which the alcohol circulates shall be painted in red. A number in order must be given to every tube. This number in order must be painted or punched in an easily noticeable manner near every point of junction.

Each tube must be set up in such way that the eye may follow its whole course.

No opening shall be made in the tube mentioned in the preceding articles without the distiller having previously made a declaration thereof to the employees.

ARTICLE 8.

The distiller is bound to send in duplicate a declaration indicating, for every one of the tubes to which the preceding article applies, its number in order, its length, its point of departure, and its point of entrance into the cooler or reservoir from one reservoir to another, or from these different receptacles to the rectifying apparatus.

For the establishments already in operation this declaration is sent to the chief of service, in charge of the superintendent, in the space of one month beginning from the promulgation of the present regulation. Record is made thereof in the schedule.

For new establishments the declaration shall be sent to the receiver's office at the same time as the declaration prescribed by article 140 of the law of April 28, 1816. Subsequent changes are declared in advance.

ARTICLE 9.

Every receptacle intended to receive spirituous liquors, including the boiler of each rectifier, shall be provided with an indicator with a glass tube so arranged as to exhibit externally the level of the liquid.

This indicator, the scale of which is graduated to centimeters, may be replaced for receptacles other than the rectifier by a metallic gauge, also graduated to centimeters. Two openings shall be made at the point indicated by the employees for the entrance of the gauge.

ARTICLE 10.

The purpose of each receptacle in which the product of distillation or rectification are received shall be indicated by one of the following terms:

Low wine.
Alcohol to be redistilled.
Finished alcohol.
Essential oil.

These terms are indicated on the receptacles as is specified in the last paragraph of article 5.

ARTICLE 11.

Any alcohol found either in the tube or in receptacles other than those covered by articles 7, 8, and 10, or outside of the kegs inscribed in the storage register, the keeping of which is prescribed by article 33, shall be deemed fraudulently manufactured and seized.

ARTICLE 12.

The administration shall have the right to cause to be set up at its expense, under the conditions which it shall determine, counting devices intended to measure the quantities of alcoholic liquids which run out of each distilling or rectifying apparatus.

ARTICLE 13.

Every distillery shall be provided, through the care and at the expense of the manufacturer, with a receiver duly controlled by the verifier of weights and measures.

The scale of this receiver is graduated to hectoliters in its upper part, and to fractions of a liter each in its lower part for a capacity of at least 1 hectoliter. The space from one division to the other must not be less than 3 millimeters. All the indications of this scale must be readily legible.

The filling of the kegs is effected either previously by means of water or by the pouring in of alcohol itself at the moment the casks are filled.

The receivers at present in use in distilleries may be admitted at verification by the service of weights and measures.

All the distillers must, furthermore, place at the disposal of the excise a pair of scales and weights for weighing the alcohol and kegs.

ARTICLE 14.

The casks and kegs of all kinds employed for storing and transporting products of any kind and of any origin must present the mark indicating their number in order, their capacity, their dead weight (weight when empty), weight after gauging, and the gross weight.

These indications are painted or marked by means of fire or the branding iron. They are reproduced on the deeds of shipment.

The operations relating to the weighing of the empty keg, its filling with alcohol, and the record of the gross weight must follow each other without interruption.

The employees who have been present at the operation fix on one of the heads of the keg, as soon as it has been filled and weighed, a label signed by them, and which the distiller is forbidden to remove.

This label shows the number in order, the dead weight and the gross weight of each keg, and the volume and the strength of the spirituous liquors. It is completed at the moment when the keg is shipped from the factory by the indication of the number of the permit.

ARTICLE 15.

In distilleries other than those which confine themselves to receiving products from abroad in order to rectify them, the general account is established at the choice of the distiller according to one of the two modes defined hereafter.

In the first mode the entry comprises, on the one hand, the quantity of alcohol contained in the low wine obtained on the spot, which quantity must not be less than the minimum declared in compliance with article 141 of the law of April 28, 1816, and articles 9 and 10 of the law of July 20, 1837; on the other hand, the quantity of alcohol contained in the product received from abroad.

In the second mode the minimum output declared in compliance with the laws above quoted and the quantity of alcohol contained in the product coming from abroad constitute the elements of the entry, and this element may not be lower than the result of rectification.

The option is recorded in a declaration signed by the distiller.

The distillers at work at the moment of promulgation of the present regulation are bound to send their declaration of option to the chiefs of service appointed to superintend their shops, within the space of two weeks beginning from that promulgation.

For new distillers the option is recorded in the declaration prescribed by article 140 of the law of April 28, 1816.

The option is valid for at least one operating season. It continues effective so long as a declaration of amendment has not been sent to the chief of the service. This latter declaration must be made, at the latest, within the month of July preceding the operating season, beginning with which the mode of entry is to be changed.

ARTICLE 16.

In the first of the two modes of entry indicated by the preceding article, the low wines obtained on the spot are collected separately, on issuing from the distillery apparatus, in one or several receptacles, from which they may not be extracted except with the cooperation of the service.

These receptacles or gauging vats shall be isolated and shall rest on free support. They are closed and furnished with two scales graduated to hectoliters, or, if the dimensions of the receptacles admit of the space from one division to the other being 3 millimeters, at least two decaliters or liters. These scales are fixed at the point designated by the employees. They may be replaced by a metallic gauge, graduated on one of its faces like the scales themselves and on the other face to centimeters. Two openings are made at points indicated by employees for the entry of the gauge.

The openings of the gauging vats are closed by covers sealed under the conditions specified by paragraph 5 of the present article.

The points of junction of tubes by means of which these vats are connected among themselves and with the distilling apparatus, and if need be with the receiver, can not be disjoined except in the presence of the employees deputed as superintendents. These agents may fix on the washer forming the juncture a lead or seal, which the distiller is prohibited from removing.

The stopcock fitted to these tubes and to the gauging vats must be kept closed either by a padlock or by a lead, or by any other means adopted by agreement between the service and the distiller.

The receptacles at present in use to receive the low wine at their issue from the distilling apparatus may be admitted as gauging vats on condition that they shall be closed, padlocked, and provided with scale or gauge conformably to the above conditions.

When the gauging vats are emptied, the distiller is bound to cause them to be cleaned, if required to do so by the employees, in order that these agents may inspect them in the interior.

The administration may require that the full vat or those vats which are being emptied shall be emptied and cleaned whenever the work of distillation is interrupted for at least forty-eight hours.

As regards the products of rectification, they are led into receptacles arranged as prescribed in article 9. These receptacles can not communicate among themselves and with the still except by tubes arranged as prescribed in article 7.

ARTICLE 17.

The distillers to whom the preceding article applies can not introduce into the low wines before the officer has verified and entered them any quantity of substances liable to lower the alcoholic degree, unless they furnish beforehand to the administration the means of ascertaining the influence of these substances on the strength.

They can not withdraw low wines from the gauging vats except after making a declaration thereof to the employees.

After every verification the low wines recognized are entered in the storage account of products to be redistilled for the quantity of alcohol which they contain. They are, furthermore, entered in the general account of manufacture after deduction, if need be, of the quantities of alcohol added to the fermented juices.

If the quantities of alcohol thus entered in the last-mentioned account at the issue from the gauging vats are declared less than the minimum, a complementary entry is made in that account before every general inventory prescribed by article 37 hereafter.

ARTICLE 18.

In the second mode of entry provided by article 15 the products of distillation and the products of rectification when issuing from the coolers shall be conducted into closed receptacles not communicating among themselves and with the distillery, except by tubes arranged in such way that these products can not be diverted.

The provisions of article 16 are applicable to receptacles in which are collected the finished spirituous liquors and in the tubes which connect these receptacles with the rectifying apparatus.

The administration may cause the provisions of sections 3, 4, and 5 of article 16, cited above, to be applied to the receptacle and tubes intended to contain and allowed to circulate low wines and other products to be redistilled when these receptacles and the tubes are placed either outside of the still room, where the employees are permanently present, or outside of the stores, the key of which the distillers have placed in the hands of these agents.

ARTICLE 19.

In the workshop to which article 18 applies, the quantities of alcohol represented by the juices distilled according to the minimum output declared by the distiller are entered at the end of every day in the general account of manufacture.

The low wines derived from the distillation are entered every day in the storage account of products to be redistilled for the quantity of alcohol which they represent.

The quantities of alcohol in excess that appear in the inventory drawn up in compliance with article 37 hereafter are added to the charges of the general account.

ARTICLE 20.

The leads and padlocks, the use of which is prescribed by the present regulation, will be furnished gratuitously by the administration. They must be placed, at the cost of the manufacturer, according to the indication of the employees of the excise.

These agents may fix at the entrance of these padlocks, the keys of which they keep, a seal which shall not be broken by the distillers under any pretext.

ARTICLE 21.

The declarations prescribed by articles 117 and 140 of the law of April 28, 1816, regarding the profession of distiller and the capacity of the vessels in use in the distilleries, shall be made at the receiver's office two weeks at least before the beginning of the work of distillation and rectification.

The declarations prescribed by article 7 (last paragraph), 8 (last paragraph), 17 (second paragraph), 23 (second paragraph), 27, 29, 30, 33 (last paragraph), and 35 of the present regulation are received by the employees charged with the inspection of the workshop. They shall be made at least two hours in advance.

ARTICLE 22.

Every introduction of molasses shall be justified by the presentation of a permit.

The quantities introduced are verified by the employees, who take them in charge in a special account according to the weight observed on arrival.

This account is successively cleared of the quantities put into fermentation, or shipped in their natural conditions under permit.

The employees may record the status of the remnants and strike the balance of the account as often as they deem it necessary.

The quantities in excess that appear in this balance are added to the charges.

The deficits which appear therein are entered as outgoing.

On sufficient justification the administration can free from the duties to which it is subject the sugar represented by these deficits.

ARTICLE 23.

At least two weeks before the beginning of every operating season the distillers shall make at the receiver's office a general declaration of the number of working days and the minimum output of alcohol per hectoliter of fermented liquid which will be subjected to distillation, as well as of the hour beginning with which the heating of the distilling apparatus will commence and cease every day when the work is not to be continuous.

The declarations modifying the minimum output and the time during which the distillery works every day are made, if need be, to the permanent employees in the workshop.

The declarations prescribed by the present article are completed by the indications of the register of fermentation specified in the following article.

This register must be kept by the distillers unless they make to the permanent employees in their workshop the declarations necessary in order to fill them.

ARTICLE 24.

The register of the fermentation shall present, without interruption or gap, and without erasure or writing over—

1. At the very instant when the juice and substances begins to be poured into the vats—

The number and capacity of the vat.

The date and hour of the commencement of the operation.

2. At the end of the filling of each vat—

The hours at which the filling is ended.

The weight of the farinaceous matter and of the molasses.

The volume of the juices and of the macerated substances.

3. When the fermentation is ended—

The date and hour at which the fermentation ceased.

4. In proportion as the contents of each fermenting vat are distilled—

The date and hour at which the fermented liquid begins to be drawn off.

The hour at which the drawing off ceased, and, as the case may be, the quantity of liquid reserved for a new filling.

This register is furnished gratuitously by the administration. It must be presented at every demand of the employees when it is kept by the distillers themselves.

ARTICLE 25.

The employees are authorized to ascertain the density of the juices and macerated substances before and after fermentation, and to take, when they deem it necessary, samples of the fermented liquids intended for distillation.

ARTICLE 26.

Independently of the general account of manufacture, auxiliary storage accounts are opened on the premises of every distiller—

For products to be redistilled.

For finished products and, if need be, for residues or essential oil.

ARTICLE 27.

Distillers who add to the fermented juices perfect alcohols already entered are bound to make a declaration thereof to the employees and to enable them to ascertain the volume and degree thereof.

The quantity of alcohol represented by these products is carried as clearance in the storage accounts. If there is question of an establishment based under the system of article 16, it is entered as a deduction from the quantity of alcohol to be entered in the general account of manufacture.

ARTICLE 28.

At their entrance into the distillery the low wines and spirituous liquors of any sort coming from abroad shall be submitted to verification by the agents of superintendence.

After every verification the employees affix on every keg a label, which the distiller is prohibited from removing, and which indicates the number in order of that keg, its capacity, and the degree of the spirituous liquors.

The products recognized are entered in the general account of manufacture. They are furthermore entered in the storage account of products to be redistilled or in that of finished products, according as the case may be.

ARTICLE 29.

No quantity of low wine or alcohol to be redistilled can be introduced in the rectifying apparatus without declaration thereof having been made by the distiller.

The declaration shall indicate—

1. The nature, volume, and degree of the low wines and products to be redistilled.
2. The number of vessels from which these products are to be drawn.
3. The filling of the apparatus.

The quantities introduced into the rectifying apparatus are marked discharged in the storage account.

ARTICLE 30.

At the end of every day the products of rectification are entered for the quantity of alcohol which they contain in the storage account of finished alcohols or of products to be redistilled, as the case may be.

When the distiller wishes to put into kegs alcohols collected in stationary receptacles he dates a declaration thereof to the employees.

The weight and the capacity of the kegs are ascertained under the conditions determined by articles 13 and 14 of the present regulation.

ARTICLE 31.

The residues of rectification unfit for a new redistillation are entered in a special account—

1. For their total volume.
2. For their degree ascertained by the alcoholometer.
3. For the quantity of alcohol corresponding to that volume and degree.
4. For the quantity of alcohol which they really contain.

In case of shipment these residues are accompanied by permit showing the indications above enumerated with the statements: Residues of rectification. In the general account of mannfacture the quantity of pure alcohol really contained in the product shipped is marked discharged, and these products are moreover marked discharged in the special account.

This quantity is verified in the laboratories of the excise according to the samples which the employees are authorized to take both in the workshop and in the course of transportation and at their destination.

The distiller shall obtain the discharge of the residues of rectification shipped to bonders of beverages only on condition that these residues shall be entered on the premises of the consignees under the same conditions as on the premises of the shipper.

ARTICLE 32.

It is forbidden to take from the testers any quantity of low wine or other products except for the purpose of testing.

ARTICLE 33.

A storage register must be kept in all distilleries.

The employees of the excise shall inscribe on this register the number of order, the dead weight, and the gross weight of every keg, the volume and the alcoholic strength of the spirituous liquors.

In case of accident necessitating a transfusion, the employee of the service in the workshop must be immediately informed.

Any other transfusion must be declared in advance.

ARTICLE 34.

The administration will grant the discharge of molasses of fermented liquids or spirituous liquors the loss of which has been regularly ascertained by the employees.

ARTICLE 35.

The taking out of spirituous liquor of any kind must be declared to the employees; every declaration of taking out must recall the indication prescribed by article 14, in so far as concerns the number in order, the capacity, the dead weight, and the gross weight of every keg.

It must indicate, furthermore, (1) the degree of dipping of the alcoholometer and the temperature at which that degree has been noted; (2) the alcoholic degree reduced to the temperature of 15° C.

The filling must be presented to the employees. These agents must be enabled to effect their verification during the day.

The quantities of alcohol contained in the products shipped are carried as discharged both in the general account of manufacture and in the storage account of finished product or products, to be redistilled as the case may be.

ARTICLE 36.

The employees may ascertain at any moment the status of the storage account relating to—

1. The finished products.
2. The products to be redistilled.
3. The essential oil.

The distiller is bound to fill the casks or kegs so that the service has to make its verification only on a single cask to be emptied for every kind of product.

If the verification effected in the distiller's presence shows an excess, that excess is added to the charges. If, however, no work of distillation or rectification has been performed since the last entry in the storage account, the excess is seized conformably to article 100 of the law of April 28, 1816.

If the verification shows deficit, these deficits are admitted to discharge only up to the amount of the annual deduction fixed in execution of article 6 of the law above referred to of July 20, 1837. The deduction is calculated per annual operating season, beginning on October 1, and finishing on September 30 following.

ARTICLE 37.

A general inventory of products of distillation and rectification is taken whenever the employees deem it necessary. This inventory is made so far as possible when the apparatus is at rest.

ARTICLE 38.

In distilleries which use only products coming from abroad on entrance into the workshop and in those where the low wines obtained on the spot are entered in the general account of manufacture at their issue from the gauging vats (art. 16), the quantities of alcohol which at the end of every taking of an inventory constitutes an excess over the entry are seized conformably to article 100 of the law of April 28, 1816.

The deficit that appears in the general account of manufacture after allotment of the deduction accruing to the storage account becomes immediately dutiable.

Nevertheless, the administration grants the discharge of deficits ascertained on the entry in the general account of manufacture when it is established that they are due to a deficit of output beyond the minimum declared or to waste in rectification, and that they do not exceed 5 per cent of the entries.

When distillers protest against the decision of the administration, or when the deficit or weight exceeds 5 per cent, the minister decides after having taken the advice of the section of finances of the council of state.

ARTICLE 39.

In distilleries where the entry in the general account of manufacture *is effected* according to the second system defined by article 15 of the

present regulation, if the balance of that account shows an excess, that excess is added to the charges, conformably to the last paragraph of article 19.

If the inventory shows a deficit, that deficit is subjected to the duty or admitted as discharged, under the condition determined by the last three paragraphs of the preceding article.

ARTICLE 40.

The minister of finances is charged with the execution of the present decree, which shall be published in the official journal and inserted in the Bulletin of Laws.

Done at Paris, September 18, 1879.

JULES GREVY.

By the President of the Republic:

LEON SAY,
Minister of Finances.

A true copy:

P. AUDIBERT,
Councilor of State, Director General of Indirect Contribution.

LEGISLATION.

Law of April 28, 1816.

ARTICLE 32.

Every boiler or distiller who shall introduce in a place subject (to entrance duties) wines, ciders, or berries to be converted into brandy or spirit may also claim bond. The product of distillation ascertained by the inspection of the employees shall be submitted to the entrance dues only for the quantities not presented and which he (the bonder) does not prove to have been sent by him outside of the commune.

ARTICLE 35.

The declaration of bond shall be made before the introduction of the cargoes and signed by the bonders or their attorneys. They shall indicate the storeroom, cellars, or vaults where the beverages are to be deposited, and they shall serve as deed for the entry.

ARTICLE 36.

Every boiler or distiller of grains, hulls, lees, fruits, and other substances established in a place subject to entrance dues shall be bound, if he does not claim the privilege of bond, to pay this due on the spirits arising from his distillation, the quantity of which shall be ascertained by the inspection of the clerk.

ARTICLE 37.

The bonders, dealers, or distillers shall be subject to all the obligations imposed on wholesale dealers in beverages. They shall be bound, furthermore, to produce before the clerks at the time of their inspection certificates of issue for the beverages which they shall have shipped abroad and receipt for the entrance dues for those which they have delivered at home. At the end of every quarter they shall be subject to the payment of this same duty on the quantities lacking in their charges except deductions for outflow authorized by article 103 of the present law.

ARTICLE 69.

The retail sale of beverages can not be made by boilers or distillers during the time that their manufacture takes place. That sale, however, may be authorized if the place of sale is entirely separated from the distilling shop.

ARTICLE 97.

Wholesale dealers, merchants, brokers, factors, commissioners, office keepers, depositors, distillers, boilers by profession, and others who wish to carry on wholesale commerce in beverages (whether they are bonders or not, if they live in a place subject to entrance dues), shall be bound to declare the quantities, kinds, and qualities of beverages in their possession, both in the place of their domicile and elsewhere.

ARTICLE 100.

The persons named in article 97 may transfuse, mix, and dilute their beverages without the presence of the employees. The pieces shall not be marked on arrival; only there shall be kept for beverages in their possession an account of entrance and issue, the charges of which shall be established according to the clearances, permits, or passes which they shall be bound to present under penalty of seizure, and the discharges in accordance with the receipts for the circulation tax.

Brandies and spirits shall be tallied by degrees. The charges shall accrue at the time the account is regulated in proportion to the enfeeblement of the degree of the quantities shipped or remaining in store.

ARTICLE 117.

Brewers are bound to make, at the bureau of the excise, the declaration of their profession and of the place where their establishments are situated; they shall furthermore be obliged to declare in writing the capacity of their boilers, vats, and chargers before using them; they shall furnish the water and workmen necessary to verify by the filling of these vessels the capacities declared. This operation shall be directed in their presence by employees of the excise and the protocol thereof shall be drawn up. Every vessel shall bear a number and the indication of its capacity in hectoliters.

ARTICLE 118.

It is forbidden to change, modify, or alter the capacity of the boiler, vats, and charges, or to establish new ones without having made the declaration thereof in writing twenty-four hours beforehand. This declaration shall contain the promise of the brewer not to make use of the said utensils until their capacity shall have been verified conformably to the preceding article.

ARTICLE 125.

Brewers shall be subject to the visit and the verification of the employees and shall be bound to open to them at every demand their houses, quarries, shops, store houses, cellars, and vaults, as well as to exhibit to them the beers which they shall have in their possession. These visits can not take place in the houses not contiguous to the breweries or not included within the same inclosure.

They shall also be bound to close all communications between the *breweries* and the neighboring houses other than their dwelling house.

ARTICLE 138.

Distillers and boilers by profession shall be bound to state in writing, before beginning to distill, all the declarations necessary, so that the employees may superintend their manufacture, ascertain its result, and make entry of them on their schedules.

There shall be delivered to them copies of their declaration, which they shall present at every demand of the employees during the duration of their manufacture.

ARTICLE 139.

The declaration to be made by the distillers by profession, in conformity with the preceding article, shall take place at least four hours beforehand in town and twelve hours beforehand in the country; it shall state—

1. The number and the capacity of the boilers and the macerating vats which are to be put into operation.
2. The number of working days.
3. The moment when the fire is to be lit and extinguished every day under the boilers.
4. The hour when the macerating vats are filled.
5. The quantity of farinaceous matters to be employed.
6. Finally and approximately the quantity and degree of brandy to be manufactured.

ARTICLE 140.

The provisions of articles 117, 118, and 125, regarding the declarations of the vessels in use in the breweries, and the verification which the brewers are obliged to permit in their shop and dependencies, are applicable to brewers by profession.

ARTICLE 141.

The declaration to be made by the boilers by profession, conformably to article 138, takes place at least four hours beforehand in town and twelve hours in the country. It shall state—

1. The number of working days.
2. The quantity of wine, ciders, perry, hulls, lees, fruits, molasses to be distilled.
3. Approximately the quantity and degree of the brandy to be manufactured.

ARTICLE 235.

The visits and inspection which the employees are authorized to make at the premises of persons subject to tax can only take place during the day; nevertheless, they may also be made at night in breweries and distilleries, when it shall appear from the declaration that these establishments are in activity, and on the premises of retailers of beverages during the whole time that those places of sale are open to the public.

ARTICLE 236.

The visits and the verifications which the employees are authorized to make during the day can take place only in the intervals of time determined by article 26 of the present law.

Law of April 21, 1832.

ARTICLE 38.

In towns subject to the single tax or to the entrance due, the privilege of bond shall be granted to distillers and to wholesale merchants under the conditions prescribed by articles 32, 35, 36, and 37 of the law of April 28, 1816. They shall, furthermore, present a solvent bondsman, who shall become responsible conjointly with them for the payments of the duties on the beverages, which they shall prove not to have issued from the place.

The bonder shall be bound to declare the storehouse in which he intends to place the beverages for which he claims bond. He shall not enjoy the same privilege in other storehouses if he is not authorized by the excise.

Law of April 23, 1836.

SINGLE ARTICLE.

The exercise of the right granted by article 117 of the law of April 28, 1816, to the employees of the excise of indirect contribution to verify by filling the capacity of boilers, vats, and chargers declared by the brewers can not be hindered by any obstacle raised by these brewers; they must always be ready, either themselves or through their foremen, to furnish the water and workmen necessary, and to defer to the demands of the employees.

Law of July 20, 1837.

ARTICLE 6.

The deductions granted by the laws of June 24, 1824, for waste, drawing off, and weakening in degree of wines and alcohol shall be fixed according to the places and the nature of the beverages by a royal ordinance rendered under the form of regulations of public administration; this deduction, however, can not be less than 4 per cent.

ARTICLE 7.

Any extraordinary deficit that is recognized on the premises of wholesale dealers or bonders of beverages in excess of the legal waste granted for the entire year on the quantities stored shall be at once subject to duty.

ARTICLE 8.

None but proprietors of real estate or farmers who distill exclusively wine, cider, or perry, hulls, and lees arising from their harvest, shall be considered as boilers of home growth, and shall continue to be exempt on that account from the payment of license as well as from the obligations imposed by chapter 6 of the law of April 28, 1816.

The obligations resulting from article 140 of the law of April 28, 1816, are applicable to all distillers by profession without distinction of the substances which they distill.

ARTICLE 9.

The declaration which the distillers of brandies from grain, potatoes, and other farinaceous substances shall make in conformity with article 139 of the law of April 28, 1816, shall state the quantity of macerated

substance which is to be employed during the time of the manufacture, and the quantity of alcohol which is to be derived therefrom.

The quantity of macerated substance shall be estimated by counting for every vat at least six-sevenths of the gross capacity.

The output in alcohol can not be declared at less than 2½ liters of alcohol per hectoliter of macerated substance.

ARTICLE 10.

The declarations which boilers by profession are bound to make in virtue of article 141 of the law of April 28, 1816, shall state the alcoholic strength of the liquid distilled, which shall be verified by the employees of the excise, and shall determine the minimum of the entry of products of manufacture.

In case of dispute, the alcoholic strength shall be ascertained by experiment made in the presence of the parties to the dispute.

The provisions of the present article are also applicable to distillation of sirup of starch, molasses, and other residues of factories or sugar factories or refineries.

Law of February 28, 1872.

ARTICLE 1.

The declarations required before the taking out of beverages by article 10 of the law of April 28, 1816, shall contain, besides the statement prescribed by said article, the indication of the principal point of passage which the cargo is to traverse and that of the various modes of the transportation which are to be successively employed either for the entire route to be traversed or for a part only, on condition, in the latter case, that the declaration be completed in the course of transportation.

Contraventions against the provisions of the present article shall be punished with confiscation of the beverages seized and a fine of from 500 to 5,000 francs.

Law of August 2, 1872.

ARTICLE 2.

Every holder of articles suitable for distillation of brandies or spirits is bound to make at the office of the excise a declaration stating the number and capacity of his apparatus.

ARTICLE 6.

The provisions of the law of April 21, 1832, which obliges distillers and wholesale dealers established in the town to present a solvent bondsman, who becomes responsible conjointly with them for the payment of the tax placed to their charge, is rendered applicable for the general and local taxes to all the distillers by profession and to all wholesale merchants indiscriminately.

* * * * * * *

ARTICLE 7.

Contravention against the present law and all other contravention which, relates to distillation, as well as to wholesale or retail commerce in spirituous liquors, giving rise at present to the articles 95, 96, 106, and 143 of the law of April 28, 1816, shall be subject to the penalties enacted by article 1 of the law of February 28, 1873.

ARTICLE 13.

Every distillery shall be provided, through the care and at the expense of the manufacturer, with a receiver duly controlled by the verifier of weights and measures.

The scale of this receiver is graduated to hectoliters in its upper part, and to fractions of a liter each in its lower part for a capacity of at least 1 hectoliter. The space from one division to the other must not be less than 3 millimeters. All the indications of this scale must be readily legible.

The filling of the kegs is effected either previously by means of water or by the pouring in of alcohol itself at the moment the casks are filled.

The receivers at present in use in distilleries may be admitted at verification by the service of weights and measures.

All the distillers must, furthermore, place at the disposal of the excise a pair of scales and weights for weighing the alcohol and kegs.

ARTICLE 14.

The casks and kegs of all kinds employed for storing and transporting products of any kind and of any origin must present the mark indicating their number in order, their capacity, their dead weight (weight when empty), weight after gauging, and the gross weight.

These indications are painted or marked by means of fire or the branding iron. They are reproduced on the deeds of shipment.

The operations relating to the weighing of the empty keg, its filling with alcohol, and the record of the gross weight must follow each other without interruption.

The employees who have been present at the operation fix on one of the heads of the keg, as soon as it has been filled and weighed, a label signed by them, and which the distiller is forbidden to remove.

This label shows the number in order, the dead weight and the gross weight of each keg, and the volume and the strength of the spirituous liquors. It is completed at the moment when the keg is shipped from the factory by the indication of the number of the permit.

ARTICLE 15.

In distilleries other than those which confine themselves to receiving products from abroad in order to rectify them, the general account is established at the choice of the distiller according to one of the two modes defined hereafter.

In the first mode the entry comprises, on the one hand, the quantity of alcohol contained in the low wine obtained on the spot, which quantity must not be less than the minimum declared in compliance with article 141 of the law of April 28, 1816, and articles 9 and 10 of the law of July 20, 1837; on the other hand, the quantity of alcohol contained in the product received from abroad.

In the second mode the minimum output declared in compliance with the laws above quoted and the quantity of alcohol contained in the product coming from abroad constitute the elements of the entry, and this element may not be lower than the result of rectification.

The option is recorded in a declaration signed by the distiller.

The distillers at work at the moment of promulgation of the present regulation are bound to send their declaration of option to the chiefs of service appointed to superintend their shops, within the space of two weeks beginning from that promulgation.

For new distillers the option is recorded in the declaration prescribed by article 140 of the law of April 28, 1816.

The option is valid for at least one operating season. It continues effective so long as a declaration of amendment has not been sent to the chief of the service. This latter declaration must be made, at the latest, within the month of July preceding the operating season, beginning with which the mode of entry is to be changed.

ARTICLE 16.

In the first of the two modes of entry indicated by the preceding article, the low wines obtained on the spot are collected separately, on issuing from the distillery apparatus, in one or several receptacles, from which they may not be extracted except with the cooperation of the service.

These receptacles or gauging vats shall be isolated and shall rest on free support. They are closed and furnished with two scales graduated to hectoliters, or, if the dimensions of the receptacles admit of the space from one division to the other being 3 millimeters, at least two decaliters or liters. These scales are fixed at the point designated by the employees. They may be replaced by a metallic gauge, graduated on one of its faces like the scales themselves and on the other face to centimeters. Two openings are made at points indicated by employees for the entry of the gauge.

The openings of the gauging vats are closed by covers sealed under the conditions specified by paragraph 5 of the present article.

The points of junction of tubes by means of which these vats are connected among themselves and with the distilling apparatus, and if need be with the receiver, can not be disjoined except in the presence of the employees deputed as superintendents. These agents may fix on the washer forming the juncture a lead or seal, which the distiller is prohibited from removing.

The stopcock fitted to these tubes and to the gauging vats must be kept closed either by a padlock or by a lead, or by any other means adopted by agreement between the service and the distiller.

The receptacles at present in use to receive the low wine at their issue from the distilling apparatus may be admitted as gauging vats on condition that they shall be closed, padlocked, and provided with scale or gauge conformably to the above conditions.

When the gauging vats are emptied, the distiller is bound to cause them to be cleaned, if required to do so by the employees, in order that these agents may inspect them in the interior.

The administration may require that the full vat or those vats which are being emptied shall be emptied and cleaned whenever the work of distillation is interrupted for at least forty-eight hours.

As regards the products of rectification, they are led into receptacles arranged as prescribed in article 9. These receptacles can not communicate among themselves and with the still except by tubes arranged as prescribed in article 7.

ARTICLE 17.

The distillers to whom the preceding article applies can not introduce into the low wines before the officer has verified and entered them any quantity of substances liable to lower the alcoholic degree, unless they furnish beforehand to the administration the means of ascertaining the influence of these substances on the strength.

They can not withdraw low wines from the gauging vats except after making a declaration thereof to the employees.

After every verification the low wines recognized are entered in the storage account of products to be redistilled for the quantity of alcohol which they contain. They are, furthermore, entered in the general account of manufacture after deduction, if need be, of the quantities of alcohol added to the fermented juices.

If the quantities of alcohol thus entered in the last-mentioned account at the issue from the gauging vats are declared less than the minimum, a complementary entry is made in that account before every general inventory prescribed by article 37 hereafter.

ARTICLE 18.

In the second mode of entry provided by article 15 the products of distillation and the products of rectification when issuing from the coolers shall be conducted into closed receptacles not communicating among themselves and with the distillery, except by tubes arranged in such way that these products can not be diverted.

The provisions of article 16 are applicable to receptacles in which are collected the finished spirituous liquors and in the tubes which connect these receptacles with the rectifying apparatus.

The administration may cause the provisions of sections 3, 4, and 5 of article 16, cited above, to be applied to the receptacle and tubes intended to contain and allowed to circulate low wines and other products to be redistilled when these receptacles and the tubes are placed either outside of the still room, where the employees are permanently present, or outside of the stores, the key of which the distillers have placed in the hands of these agents.

ARTICLE 19.

In the workshop to which article 18 applies, the quantities of alcohol represented by the juices distilled according to the minimum output declared by the distiller are entered at the end of every day in the general account of manufacture.

The low wines derived from the distillation are entered every day in the storage account of products to be redistilled for the quantity of alcohol which they represent.

The quantities of alcohol in excess that appear in the inventory drawn up in compliance with article 37 hereafter are added to the charges of the general account.

ARTICLE 20.

The leads and padlocks, the use of which is prescribed by the present regulation, will be furnished gratuitously by the administration. They must be placed, at the cost of the manufacturer, according to the indication of the employees of the excise.

These agents may fix at the entrance of these padlocks, the keys of which they keep, a seal which shall not be broken by the distillers under any pretext.

ARTICLE 21.

The declarations prescribed by articles 117 and 140 of the law of April 28, 1816, regarding the profession of distiller and the capacity of the vessels in use in the distilleries, shall be made at the receiver's office two weeks at least before the beginning of the work of distillation and rectification.

The declarations prescribed by article 7 (last paragraph), 8 (last paragraph), 17 (second paragraph), 23 (second paragraph), 27, 29, 30, 33 (last paragraph), and 35 of the present regulation are received by the employees charged with the inspection of the workshop. They shall be made at least two hours in advance.

ARTICLE 22.

Every introduction of molasses shall be justified by the presentation of a permit.

The quantities introduced are verified by the employees, who take them in charge in a special account according to the weight observed on arrival.

This account is successively cleared of the quantities put into fermentation, or shipped in their natural conditions under permit.

The employees may record the status of the remnants and strike the balance of the account as often as they deem it necessary.

The quantities in excess that appear in this balance are added to the charges.

The deficits which appear therein are entered as outgoing.

On sufficient justification the administration can free from the duties to which it is subject the sugar represented by these deficits.

ARTICLE 23.

At least two weeks before the beginning of every operating season the distillers shall make at the receiver's office a general declaration of the number of working days and the minimum output of alcohol per hectoliter of fermented liquid which will be subjected to distillation, as well as of the hour beginning with which the heating of the distilling apparatus will commence and cease every day when the work is not to be continuous.

The declarations modifying the minimum output and the time during which the distillery works every day are made, if need be, to the permanent employees in the workshop.

The declarations prescribed by the present article are completed by the indications of the register of fermentation specified in the following article.

This register must be kept by the distillers unless they make to the permanent employees in their workshop the declarations necessary in order to fill them.

ARTICLE 24.

The register of the fermentation shall present, without interruption or gap, and without erasure or writing over—

1. At the very instant when the juice and substances begins to be poured into the vats—

The number and capacity of the vat.

The date and hour of the commencement of the operation.

2. At the end of the filling of each vat—

The hours at which the filling is ended.

The weight of the farinaceous matter and of the molasses.

The volume of the juices and of the macerated substances.

3. When the fermentation is ended—

The date and hour at which the fermentation ceased.

4. In proportion as the contents of each fermenting vat are distilled—

The date and hour at which the fermented liquid begins to be drawn off.

The hour at which the drawing off ceased, and, as the case may be, the quantity of liquid reserved for a new filling.

This register is furnished gratuitously by the administration. It must be presented at every demand of the employees when it is kept by the distillers themselves.

ARTICLE 25.

The employees are authorized to ascertain the density of the juices and macerated substances before and after fermentation, and to take, when they deem it necessary, samples of the fermented liquids intended for distillation.

ARTICLE 26.

Independently of the general account of manufacture, auxiliary storage accounts are opened on the premises of every distiller—

For products to be redistilled.

For finished products and, if need be, for residues or essential oil.

ARTICLE 27.

Distillers who add to the fermented juices perfect alcohols already entered are bound to make a declaration thereof to the employees and to enable them to ascertain the volume and degree thereof.

The quantity of alcohol represented by these products is carried as clearance in the storage accounts. If there is question of an establishment based under the system of article 16, it is entered as a deduction from the quantity of alcohol to be entered in the general account of manufacture.

ARTICLE 28.

At their entrance into the distillery the low wines and spirituous liquors of any sort coming from abroad shall be submitted to verification by the agents of superintendence.

After every verification the employees affix on every keg a label, which the distiller is prohibited from removing, and which indicates the number in order of that keg, its capacity, and the degree of the spirituous liquors.

The products recognized are entered in the general account of manufacture. They are furthermore entered in the storage account of products to be redistilled or in that of finished products, according as the case may be.

ARTICLE 29.

No quantity of low wine or alcohol to be redistilled can be introduced in the rectifying apparatus without declaration thereof having been made by the distiller.

The declaration shall indicate—

1. The nature, volume, and degree of the low wines and products to be redistilled.
2. The number of vessels from which these products are to be drawn.
3. The filling of the apparatus.

The quantities introduced into the rectifying apparatus are marked discharged in the storage account.

ARTICLE 30.

At the end of every day the products of rectification are entered for the quantity of alcohol which they contain in the storage account of finished alcohols or of products to be redistilled, as the case may be.

When the distiller wishes to put into kegs alcohols collected in stationary receptacles he dates a declaration thereof to the employees.

The weight and the capacity of the kegs are ascertained under the conditions determined by articles 13 and 14 of the present regulation.

ARTICLE 31.

The residues of rectification unfit for a new redistillation are entered in a special account—

1. For their total volume.
2. For their degree ascertained by the alcoholometer.
3. For the quantity of alcohol corresponding to that volume and degree.
4. For the quantity of alcohol which they really contain.

In case of shipment these residues are accompanied by permit showing the indications above enumerated with the statements: Residues of rectification. In the general account of mannfacture the quantity of pure alcohol really contained in the product shipped is marked discharged, and these products are moreover marked discharged in the special account.

This quantity is verified in the laboratories of the excise according to the samples which the employees are authorized to take both in the workshop and in the course of transportation and at their destination.

The distiller shall obtain the discharge of the residues of rectification shipped to bonders of beverages only on condition that these residues shall be entered on the premises of the consignees under the same conditions as on the premises of the shipper.

ARTICLE 32.

It is forbidden to take from the testers any quantity of low wine or other products except for the purpose of testing.

ARTICLE 33.

A storage register must be kept in all distilleries.

The employees of the excise shall inscribe on this register the number of order, the dead weight, and the gross weight of every keg, the volume and the alcoholic strength of the spirituous liquors.

In case of accident necessitating a transfusion, the employee of the service in the workshop must be immediately informed.

Any other transfusion must be declared in advance.

ARTICLE 34.

The administration will grant the discharge of molasses of fermented liquids or spirituous liquors the loss of which has been regularly ascertained by the employees.

ARTICLE 35.

The taking out of spirituous liquor of any kind must be declared to the employees; every declaration of taking out must recall the indication prescribed by article 14, in so far as concerns the number in order, the capacity, the dead weight, and the gross weight of every keg.

It must indicate, furthermore, (1) the degree of dipping of the alcoholometer and the temperature at which that degree has been noted; (2) the alcoholic degree reduced to the temperature of 15° C.

The filling must be presented to the employees. These agents must be enabled to effect their verification during the day.

The quantities of alcohol contained in the products shipped are carried as discharged both in the general account of manufacture and in the storage account of finished product or products, to be redistilled as the case may be.

ARTICLE 36.

The employees may ascertain at any moment the status of the storage account relating to—

1. The finished products.
2. The products to be redistilled.
3. The essential oil.

The distiller is bound to fill the casks or kegs so that the service has to make its verification only on a single cask to be emptied for every kind of product.

If the verification effected in the distiller's presence shows an excess, that excess is added to the charges. If, however, no work of distillation or rectification has been performed since the last entry in the storage account, the excess is seized conformably to article 100 of the law of April 28, 1816.

If the verification shows deficit, these deficits are admitted to discharge only up to the amount of the annual deduction fixed in execution of article 6 of the law above referred to of July 20, 1837. The deduction is calculated per annual operating season, beginning on October 1, and finishing on September 30 following.

ARTICLE 37.

A general inventory of products of distillation and rectification is taken whenever the employees deem it necessary. This inventory is made so far as possible when the apparatus is at rest.

ARTICLE 38.

In distilleries which use only products coming from abroad on entrance into the workshop and in those where the low wines obtained on the spot are entered in the general account of manufacture at their issue from the gauging vats (art. 16), the quantities of alcohol which at the end of every taking of an inventory constitutes an excess over the entry are seized conformably to article 100 of the law of April 28, 1816.

The deficit that appears in the general account of manufacture after allotment of the deduction accruing to the storage account becomes immediately dutiable.

Nevertheless, the administration grants the discharge of deficits ascertained on the entry in the general account of manufacture when it is established that they are due to a deficit of output beyond the minimum declared or to waste in rectification, and that they do not exceed 5 per cent of the entries.

When distillers protest against the decision of the administration, or when the deficit or weight exceeds 5 per cent, the minister decides after having taken the advice of the section of finances of the council of state.

ARTICLE 39.

In distilleries where the entry in the general account of manufacture is effected according to the second system defined by article 15 of the

present regulation, if the balance of that account shows an excess, that excess is added to the charges, conformably to the last paragraph of article 19.

If the inventory shows a deficit, that deficit is subjected to the duty or admitted as discharged, under the condition determined by the last three paragraphs of the preceding article.

ARTICLE 40.

The minister of finances is charged with the execution of the present decree, which shall be published in the official journal and inserted in the Bulletin of Laws.

Done at Paris, September 18, 1879.

JULES GREVY.

By the President of the Republic:

LEON SAY,
Minister of Finances.

A true copy:

P. AUDIBERT,
Councilor of State, Director General of Indirect Contribution.

LEGISLATION.

Law of April 28, 1816.

ARTICLE 32.

Every boiler or distiller who shall introduce in a place subject (to entrance duties) wines, ciders, or berries to be converted into brandy or spirit may also claim bond. The product of distillation ascertained by the inspection of the employees shall be submitted to the entrance dues only for the quantities not presented and which he (the bonder) does not prove to have been sent by him outside of the commune.

ARTICLE 35.

The declaration of bond shall be made before the introduction of the cargoes and signed by the bonders or their attorneys. They shall indicate the storeroom, cellars, or vaults where the beverages are to be deposited, and they shall serve as deed for the entry.

ARTICLE 36.

Every boiler or distiller of grains, hulls, lees, fruits, and other substances established in a place subject to entrance dues shall be bound, if he does not claim the privilege of bond, to pay this due on the spirits arising from his distillation, the quantity of which shall be ascertained by the inspection of the clerk.

ARTICLE 37.

The bonders, dealers, or distillers shall be subject to all the obligations imposed on wholesale dealers in beverages. They shall be bound, furthermore, to produce before the clerks at the time of their inspection certificates of issue for the beverages which they shall have shipped abroad and receipt for the entrance dues for those which they have delivered at home. At the end of every quarter they shall be subject to the payment of this same duty on the quantities lacking in their charges except deductions for outflow authorized by article 103 of the present law.

ARTICLE 69.

The retail sale of beverages can not be made by boilers or distillers during the time that their manufacture takes place. That sale, however, may be authorized if the place of sale is entirely separated from the distilling shop.

ARTICLE 97.

Wholesale dealers, merchants, brokers, factors, commissioners, office keepers, depositors, distillers, boilers by profession, and others who wish to carry on wholesale commerce in beverages (whether they are bonders or not, if they live in a place subject to entrance dues), shall be bound to declare the quantities, kinds, and qualities of beverages in their possession, both in the place of their domicile and elsewhere.

ARTICLE 100.

The persons named in article 97 may transfuse, mix, and dilute their beverages without the presence of the employees. The pieces shall not be marked on arrival; only there shall be kept for beverages in their possession an account of entrance and issue, the charges of which shall be established according to the clearances, permits, or passes which they shall be bound to present under penalty of seizure, and the discharges in accordance with the receipts for the circulation tax.

Brandies and spirits shall be tallied by degrees. The charges shall accrue at the time the account is regulated in proportion to the enfeeblement of the degree of the quantities shipped or remaining in store.

ARTICLE 117.

Brewers are bound to make, at the bureau of the excise, the declaration of their profession and of the place where their establishments are situated; they shall furthermore be obliged to declare in writing the capacity of their boilers, vats, and chargers before using them; they shall furnish the water and workmen necessary to verify by the filling of these vessels the capacities declared. This operation shall be directed in their presence by employees of the excise and the protocol thereof shall be drawn up. Every vessel shall bear a number and the indication of its capacity in hectoliters.

ARTICLE 118.

It is forbidden to change, modify, or alter the capacity of the boiler, vats, and charges, or to establish new ones without having made the declaration thereof in writing twenty-four hours beforehand. This declaration shall contain the promise of the brewer not to make use of the said utensils until their capacity shall have been verified conformably to the preceding article.

ARTICLE 125.

Brewers shall be subject to the visit and the verification of the employees and shall be bound to open to them at every demand their houses, quarries, shops, store houses, cellars, and vaults, as well as to exhibit to them the beers which they shall have in their possession. These visits can not take place in the houses not contiguous to the breweries or not included within the same inclosure.

They shall also be bound to close all communications between the breweries and the neighboring houses other than their dwelling house.

ARTICLE 138.

Distillers and boilers by profession shall be bound to state in writing, before beginning to distill, all the declarations necessary, so that the employees may superintend their manufacture, ascertain its result, and make entry of them on their schedules.

There shall be delivered to them copies of their declaration, which they shall present at every demand of the employees during the duration of their manufacture.

ARTICLE 139.

The declaration to be made by the distillers by profession, in conformity with the preceding article, shall take place at least four hours beforehand in town and twelve hours beforehand in the country; it shall state—

1. The number and the capacity of the boilers and the macerating vats which are to be put into operation.
2. The number of working days.
3. The moment when the fire is to be lit and extinguished every day under the boilers.
4. The hour when the macerating vats are filled.
5. The quantity of farinaceous matters to be employed.
6. Finally and approximately the quantity and degree of brandy to be manufactured.

ARTICLE 140.

The provisions of articles 117, 118, and 125, regarding the declarations of the vessels in use in the breweries, and the verification which the brewers are obliged to permit in their shop and dependencies, are applicable to brewers by profession.

ARTICLE 141.

The declaration to be made by the boilers by profession, conformably to article 138, takes place at least four hours beforehand in town and twelve hours in the country. It shall state—

1. The number of working days.
2. The quantity of wine, ciders, perry, hulls, lees, fruits, molasses to be distilled.
3. Approximately the quantity and degree of the brandy to be manufactured.

ARTICLE 235.

The visit and inspection which the employees are authorized to make at the premises of persons subject to tax can only take place during the day; nevertheless, they may also be made at night in breweries and distilleries, when it shall appear from the declaration that these establishments are in activity, and on the premises of retailers of beverages during the whole time that those places of sale are open to the public.

ARTICLE 236.

The visits and the verifications which the employees are authorized to make during the day can take place only in the intervals of time determined by article 26 of the present law.

Law of April 21, 1832.

ARTICLE 38.

In towns subject to the single tax or to the entrance due, the privilege of bond shall be granted to distillers and to wholesale merchants under the conditions prescribed by articles 32, 35, 36, and 37 of the law of April 28, 1816. They shall, furthermore, present a solvent bondsman, who shall become responsible conjointly with them for the payments of the duties on the beverages, which they shall prove not to have issued from the place.

The bonder shall be bound to declare the storehouse in which he intends to place the beverages for which he claims bond. He shall not enjoy the same privilege in other storehouses if he is not authorized by the excise.

Law of April 23, 1836.

SINGLE ARTICLE.

The exercise of the right granted by article 117 of the law of April 28, 1816, to the employees of the excise of indirect contribution to verify by filling the capacity of boilers, vats, and chargers declared by the brewers can not be hindered by any obstacle raised by these brewers; they must always be ready, either themselves or through their foremen, to furnish the water and workmen necessary, and to defer to the demands of the employees.

Law of July 20, 1837.

ARTICLE 6.

The deductions granted by the laws of June 24, 1824, for waste, drawing off, and weakening in degree of wines and alcohol shall be fixed according to the places and the nature of the beverages by a royal ordinance rendered under the form of regulations of public administration; this deduction, however, can not be less than 4 per cent.

ARTICLE 7.

Any extraordinary deficit that is recognized on the premises of wholesale dealers or bonders of beverages in excess of the legal waste granted for the entire year on the quantities stored shall be at once subject to duty.

ARTICLE 8.

None but proprietors of real estate or farmers who distill exclusively wine, cider, or perry, hulls, and lees arising from their harvest, shall be considered as boilers of home growth, and shall continue to be exempt on that account from the payment of license as well as from the obligations imposed by chapter 6 of the law of April 28, 1816.

The obligations resulting from article 140 of the law of April 28, 1816, are applicable to all distillers by profession without distinction of the substances which they distill.

ARTICLE 9.

The declaration which the distillers of brandies from grain, potatoes, and other farinaceous substances shall make in conformity with article 139 of the law of April 28, 1816, shall state the quantity of macerated

substance which is to be employed during the time of the manufacture, and the quantity of alcohol which is to be derived therefrom.

The quantity of macerated substance shall be estimated by counting for every vat at least six-sevenths of the gross capacity.

The output in alcohol can not be declared at less than 2½ liters of alcohol per hectoliter of macerated substance.

ARTICLE 10.

The declarations which boilers by profession are bound to make in virtue of article 141 of the law of April 28, 1816, shall state the alcoholic strength of the liquid distilled, which shall be verified by the employees of the excise, and shall determine the minimum of the entry of products of manufacture.

In case of dispute, the alcoholic strength shall be ascertained by experiment made in the presence of the parties to the dispute.

The provisions of the present article are also applicable to distillation of sirup of starch, molasses, and other residues of factories or sugar factories or refineries.

Law of February 28, 1872.

ARTICLE 1.

The declarations required before the taking out of beverages by article 10 of the law of April 28, 1816, shall contain, besides the statement prescribed by said article, the indication of the principal point of passage which the cargo is to traverse and that of the various modes of the transportation which are to be successively employed either for the entire route to be traversed or for a part only, on condition, in the latter case, that the declaration be completed in the course of transportation.

Contraventions against the provisions of the present article shall be punished with confiscation of the beverages seized and a fine of from 500 to 5,000 francs.

Law of August 2, 1872.

ARTICLE 2.

Every holder of articles suitable for distillation of brandies or spirits is bound to make at the office of the excise a declaration stating the number and capacity of his apparatus.

ARTICLE 6.

The provisions of the law of April 21, 1832, which obliges distillers and wholesale dealers established in the town to present a solvent bondsman, who becomes responsible conjointly with them for the payment of the tax placed to their charge, is rendered applicable for the general and local taxes to all the distillers by profession and to all wholesale merchants indiscriminately.

* * * * * * *

ARTICLE 7.

Contravention against the present law and all other contravention which, relates to distillation, as well as to wholesale or retail commerce in spirituous liquors, giving rise at present to the articles 95, 96, 106, and 143 of the law of April 28, 1816, shall be subject to the penalties enacted by article 1 of the law of February 28, 1873.

Decree of December 4, 1872.

ARTICLE 1.

The deduction to be allowed annually to wholesale merchants and other bonders for leakage, drawing off, enfeeblement of degree, and for all other waste of alcohol and liquors, both in casks and in bottles, shall be uniformly calculated in all of France at the rate of 7 per cent.

ARTICLE 2.

The preceding provisions shall take effect on January 1, 1873.

Law of June 21, 1873.

ARTICLE 6.

All transportation of spirituous liquors without clearance or with a clearance that is not applicable shall give rise to the penalties in article 1 of the law of February 28, 1872.

The declaration of taking out alcohols and spirituous liquors shall indicate the capacity of every cask and the degree with a number corresponding to that placed on the cask.

The cylindrical receiver with scale as well as every receiver the exactness of which shall have been ascertained by the verifiers of weights and measures shall hereafter be placed among the legal measures and punched by the said verifiers.

ARTICLE 7.

The contraventions referred to articles 19 and 96 of the law of April 28, 1816, second paragraph of article 106 of the same law and second paragraph of article 1 of the law of February 28, 1872, shall give rise hereafter whenever they referred to wines, cider, perry, and hydromels to the application of a fine from 200 to 1,000 francs independently of the confiscation of the beverages seized.

In case of second offense the fines shall not be less than 500 francs.

A tolerance of 1 per cent, either for the capacity or for the degree, is granted to shippers on their declaration of alcohols, spirituous liquors, wines, cider, perry, and hydromels, but the quantities recognized in excess shall be entered in the account of the consignee.

ARTICLE 9.

Every person convicted of having knowingly concealed in vaults, cellars, store rooms, or other rooms at their disposal, beverages which have been recognized to belong to a retailer, a wholesale merchant, a distiller, or a boiler, shall be subject to the penalties enacted by article 7 of the present law or by article 1 of the law of February 28, 1872, as the case may be, without interfering with the penalties incurred by the author of the fraud.

ARTICLE 14.

The penalty * * * of six days to six months imprisonment shall be applied to delinquents who, contrary to prohibitions of article 10 of the law of May 22, 1822, and the royal ordinance of July 20, 1825, shall have manufactured, distilled, restored to the state of nature, within Paris or any other locality subject to the same prohibitive system, brandies or spirits, or shall have restored to the natural state methylated alcohols previously introduced with payment of the reduced tax.

Law of March 21, 1874.

ARTICLE 3.

A set of regulations of public administration shall determine the measures necessary to assure the collection of the duty in distilleries. * * *

Contraventions against the provisions of these regulations shall be subject to the penalties enacted by article 1 of the law of February 28, 1872.

EXAMPLES.

No. 1.

On the fifteenth of September, one thousand eight hundred and seventy-nine, at eight in the morning, Mr. Martin, wishing to distill in his shop, situated at Blangyrue du Marais, No. 10, has declared—

1. That the work of manufacture will begin on the first of October, at seven in the morning.

2. That the manufacture will last one hundred and five successive days, beginning with the first of October, one thousand eight hundred and seventy-nine, except the following days: the first of November, the twenty-fifth and twenty-sixth of December, and the first and second of January, on which it will be suspended.

3. That the raw material used shall consist of beet juice, which material will produce three liters and fifty centiliters of alcohol per hectoliter of fermented liquid.

4. That the fire will be lit every day under the distilling apparatus from —— o'clock in the —— to —— o'clock in the ——, night and day.

Record hereof signed by the declarer.

Copy delivered.

Inscribed in the memorandum sheet.

Inscribed in the schedule sheet.

No. 2.

On the first of October, one thousand eight hundred and seventy-nine, at nine in the morning, Mr. Robert, wishing to distill in his shop situated at Oisy, rue route nationale No. ——, declared—

1. That the work of manufacture will commence on the sixteenth of October, at ten in the morning.

2. That the manufacture will last three hundred and forty-eight consecutive days, beginning with the sixteenth of October, except the following days: —— ——, during which it will be suspended.

3. That the raw material used shall consist of homemade molasses diluted with the addition of rice and barley, which raw material will produce five liters and ten centiliters of pure alcohol per hectoliter of fermented liquid.

4. That the fire will be lit every day under the distilling apparatus from —— o'clock in the —— to —— o'clock in the ——, night and day.

Record hereof signed by the declarer.

Copy delivered.

Inscribed in the memorandum sheet.

Inscribed in the schedule sheet.

No. 3.

On the first of October, one thousand eight hundred and seventy-nine, at ten o'clock in the morning, Mr. Laurent, wishing to distill in his shop, situated at Nimes, rue du Marche, No. 2, declared—

1. That the work of manufacture will commence on the sixteenth of October, at eight in the morning.

2. That the manufacture will last one hundred and thirty-eight consecutive days, beginning with the sixteenth of October, except the following days: the first and second of November, the twenty-fifth and twenty-sixth of December, and the first and second of January, on which it will be suspended.

3. That the raw material used shall consist in low wines derived from abroad, which shall be delivered to rectification, which substances will produce —— liters and —— centiliters of pure alcohol per hectoliter of fermented liquid.

4. That the fire will be lit every day under the distilling apparatus from six o'clock in the morning to seven o'clock in the evening.

Record hereof signed by the declarer.

Copy delivered.

Inscribed in the memorandum book sheet.

Inscribed in the schedule sheet.

INSTRUCTION.

ART. 1. In the present register there shall be inscribed the declaration which distillers and boilers by profession are bound to make to the excise in conformity with articles 138, 139, and 141 of the law of April 28, 1816, and with articles 9 and 10 of the law of July 20, 1867.

ART. 2. These declarations shall be made two weeks, at least, before the beginning of work.

ART. 3. They shall state the number of days of work, the output of alcohol at the minimum per hectoliter of fermented liquid subjected to distillation, and the hour at which every day the heating of the distilling apparatus is to begin and to end when the work is not continuous.

The other indications prescribed by the laws cited above will be furnished by the fermenting register.

ART. 4. Distillers of farinaceous substances can not be admitted to declare a minimum of output less than 2 liters and 50 centiliters per hectoliter of macerated substance.

ART. 5. Distillers who use other substances must assign to these substances an alcoholic strength in accordance with the normal output.

ART. 6. Distillers who use farinaceous substances mixed with other substances shall also declare the normal output of the fermented liquid arising from the mixtures.

ART. 7. When, according to the information given to them by the employees, the bureau officers judge that the declaration of output is well made, they receive it purely and simply. In the opposite case they shall discuss the declaration; but if the taxpayer persists, they can not refuse to receive it; the register is bound to notify the employees, who, if they deem it advisable, initiate the verification in the presence of the contestants, as authorized by laws and regulations.

ART. 8. The series of numbers of registry shall continue without interruption from the beginning to the end of the year, even if there is occasion to use several registers. After the settlement at the end of the year a new series of numbers will be open.

ART. 9. The blank spaces shall be filled with words fully written out. When certain statements of printed formulas are not to be used, they are to be crossed out by a stroke of the pen.

ART. 10. Erasures and words written over must be approved.

ART. 11. The cost of the stamp is 10 centimes.

ART. 12. The bureau officers inform immediately the local chief of service of every declaration of distillation. This notice is given by word of mouth or by means of a bulletin 6 A.

ART. 13. In order to fill the present register the bureau officers will be guided by the indications furnished by the model filled out.

No. 1 applies to a distillery of beet juice in which the work is to be continued.

No. 2 relates to an important distillery of grains and molasses in which the apparatus works without interruption.

In No. 3 there is question of a distillery which works only by day and which confines itself to rectifying low wines coming from abroad.

All the cases which may present themselves can not be foreseen. It is the bureau officer's duty to judge according to the samples given how the declarations are to be worded in situations other than those here supposed.

ART. 14. Inspectors and controllers shall often compare the registers of declaration with the schedules and memorandum books, to assure themselves that the declaration subscribed has been recorded on those schedules or memorandum books. They will certify to this operation by vise, which will recall the number by which the verification has begun and the number by which it will be ended.

FILING OF DECLARATION.

No. 17.

Declaration relating to the unsealing or perforation of a tube (article 7 of Regulation A).

On the 1st of October, 18—, Mr. —— declared that he found himself obliged to —— (unseal or perforate) tube No. 5 at a distance of 1 meter and 20 centimeters from the point of junction between that tube and cooler No. 3, in order to —— (indicate the cause); and he signed.

No. 18.

Declaration relating to the extraction of spirituous liquors contained in a padlocked vat.

On the 3d of October, 18—, Mr. —— declared that he wished to begin on that day (or the day after), at —— o'clock in the ——, to extract the low wines contained in gauging vat No. —; and he signed.

No. 19.

Declaration of mixture of imperfect spirit and fermented liquid (article 27 of Regulation A).

On the 4th of October, 18—, Mr. —— declared that he wished to extract from vat No. 6 on that day, at 4 o'clock in the evening, 5 meters and 60 centimeters of imperfect spirits of 80°, which are to be added forthwith to the fermented liquid contained in vats Nos. 13, 14, and 15; and he signed.

No. 20.

Declaration of redistillation (article 29 of Regulation A).

On the 5th of October, 18—, Mr. —— declared that he wished to submit to redistillation 20 hectoliters of low wine at 50°, which are to be extracted from vats 14 and 15 and introduced into the rectifier No. — to-day from 2 to 3 o'clock in the afternoon; and he signed.

No. 21.

Declaration of accidental loss.

On the 6th of October, 18—, Mr. —— declared that, owing to the rupture of vat No. —, in which there were 18 hectoliters and 40 liters of low wine at 40°, a quantity of 11 hectoliters and 50 liters of that liquid was scattered over the floor on that day at 10 o'clock in the morning; and he signed.

No. 22.

Declaration of transfusion (articles 30 and 33 of Regulation A, 22 of Regulation A bis).

On the 10th of October, 18—, Mr. —— declared that he wished to transfuse from vat No. 4 into vat No. 5, 40 hectoliters of spirits at 94° (or proceed to put in cask the contents of vat No. 4, containing 40 hectoliters of spirits at 94°). The operation will begin on this day (or to-morrow, at —— o'clock in the ——; and he signed.

No. 23.

Declaration modifying the general declaration of manufacture (article 23 of Regulation A, and article 17 of Regulation A bis).

On the 1st of December, 18—, Mr. —— declared that, beginning from to-morrow, he will no longer use anything but homemade molasses in place of a mixture of molasses and grain, and that the fermented liquid derived therefrom will produce 5 liters of alcohol per hectoliter; and he signed.

INSTRUCTION.

I. The present register is destined for the inscription of the declarations which distillers are bound to make in execution of articles 17, 23, 29, 30, and 33 of Regulation A, 17 and 22 of Regulation A bis, respecting—

1. The withdrawal of low wines or alcohol contained in the gauging vats.
2. The introduction of imperfect spirits into fermented liquids.
3. The rectification or redistillation of low wines and imperfect spirits.
4. The transfusion of spirituous liquor in stores.
5. The modifications introduced in the nature of alcoholic strength of the raw substances used.

II. On this register there shall also be entered all the declarations relating to the accidental fact which occur in distilleries whether there is question of loss of raw material or of alcohol or of modifications

arising in the course of the work, or that there be occasion to unseal or perforate a tube.

III. Every declaration shall be signed by the distiller or his representative.

Every erasure or word written over shall be approved.

No stamp due shall be levied.

IV. In receivers' offices a single register shall serve for all distillers of its jurisdiction. The declarations shall be inscribed therein at the very moment and in the order in which they are presented; the filled out models indicate the principal cases of application.

A register, No. 2, will be sent to the chief of service of every shop subject to permanent superintendence.

V. The series of numbers which continue without interruption from the beginning to the end of each operating season. When a register is filled in the course of an operating season, the series begun will be continued in the following register.

VI. In case of insufficiency of one square to contain all the details of the declaration, two or more squares shall be assigned to that declaration, which shall be united under the same number by a brace.

VII. In the column entitled "Action taken upon the operation," the officer shall indicate the folio of the schedule or of the memorandum book on which the detail of the verification shall have been recorded.

INSTRUCTION.

I. The present register is intended for the inscription of declarations which have for their object the subjection to fermentation of raw material (arts. 24 of Regulation A, and 18 of Regulation A bis). It shall be placed on exhibition in place in the shop, where it must remain at the disposal of the manufacturer and of the service.

II. There shall be inscribed therein without interruption or gap and for every filling—

1. At the very moment when the juice and the substances begin to be poured into the fermenting vat, the number and capacity of that vat, the date and hour when the operation begins.

2. At the end of the filling of that vat, the hour at which that filling is ended, the weight of the farinaceous matters and that of the molasses, the volume of the juices and macerated substances.

3. In proportion as the contents of each vat are distilled, the date and hour when the fermented liquid began to be drawn, the hour when the drawing ceased, and, as the case may be, the quantity of liquid reserved for a new filling.

III. Every erasure or word written over must be approved.

IV. Before sending the register to the distiller the chief of the service who has charge thereof shall take care to number every article.

V. The number shall be followed without interruption from the beginning to the end of every operating season. When one register is filled, the series begun shall be continued in the new register.

VI. When the filling of several vats is effected at the same time, all these vats may be united by a brace in the same square and under the same number.

VII. In sending the register to the distiller the employees shall withhold the receipts which that manufacturer is to sign, and they shall address it to the director's or subdirector's office to which they belong.

VIII. As they are filled the register shall be retired and kept until the end of the operating season in the archives of the post.

IX. The filled-out models to be found elsewhere indicate the manner of using that register.

I, the undersigned[1] ——, distiller at ——, acknowledge having received from the receiver of indirect contribution at —— the register intended to record the fermentation of juices and macerated substances, which register, containing —— folios numbered and initialed, has been sent to me after having been numbered at each article from No. — to No. —, inclusive, to make thereof the use prescribed by article 24 of Regulation A, and article 18 of Regulation A bis, the provisions of which are recalled in the instructions annexed to the said register, an instruction to which I promise to conform entirely, pledging myself, furthermore, to exhibit this register on every demand of the employees of the excise.

At——this——day of——, 1870.

INSTRUCTIONS.

1. The present memorandum book is intended to present successively and in the order in which they are performed all the operation of the fermentation or distillation for which distillers are obliged to make previous declarations (arts. 23, 24 of Regulation A, and 17, 18 of Regulation A bis). The verifications which are incumbent on the employees in the course of these operations are also entered there.

2. The title of columns 6 to 8 has been left blank in order to allow the inspecting agent to indicate the nature of raw material used in every shop. If in certain cases these four columns do not suffice to distinguish the various substances subjected to distillation, they might be doubled by means of the pen.

3. If the maceration of raw material took place in vessels other than the fermenting vats, the employees would take care to note the volume or weight of substances introduced into the macerators, so as to be able subsequently to divide that volume or weight among the various fermenting vats proportionately to the quantity of macerated material which they have received.

4. At the end of every day the entries shall be summed up so as to show on a single line the results of the various operations effected, as well as the quantity of alcohol to be entered in the manufacturing account under the head of minimum of output, according to the provisions of article 19 of Regulation A. Below there shall be carried the result of previous inspection and a new total shall be found, so as to obtain in this way the total of the operation from the beginning of the operating season.

5. The totals of columns 3 and 20 shall present the number of vats inscribed in the said columns.

6. When the declaration subscribed in No. 3 comprises several vats, these vessels shall not be confounded in the entries in the present memorandum book; a distinct line shall be assigned to each one of them.

7. The daily settlement prescribed above shall be dated and signed by the employees who have established it.

8. The present memorandum book shall be kept in the distilleries superintended intermittently, as well as in those which are subject to permanent superintendence.

Columns 13 to 16 of the memorandum book kept for the shop superintended intermittently will necessarily present gaps; the employees, however, must endeavor to reduce their number as much as possible by proceeding to ascertain the densities in all the vats the fermentation of which has not begun or has ended.

[1] Name and given name.

The controllers and inspectors shall take care that this recommendation be not lost from view; they shall make sure that all the indications entered in the memorandum book are exact, and they shall compare them with the statements of the declaration inscribed in register No. 3.

INSTRUCTIONS.

1. The present memorandum book is intended to record the quantities of low wine successively extracted from the gauging vats specified in articles 17 of Regulation A and 21 of Regulation A bis.

2. Being summed up at the end of every day, the quantities of alcohol inscribed in the memorandum book shall be entered in the account of manufacture and in the accounts of storage of products to be redistilled.

3. Below the total of every day the previous totals shall be carried, and a new total shall be ascertained, so as to present day by day the total of the inspection since the beginning of the operating season.

4. This daily settlement shall be dated and signed by the employees who have established it.

5. The controllers and inspectors shall make sure by careful comparison of the agreement which must always exist between the entries made and the statements of the present memorandum book.

NSTRUCTIONS.

1. The present register is intended to give a résumé day by day of the quantities of low wine and imperfect spirits subjected to rectification in distilleries.

2. The indications implied in keeping of this register shall be taken from the register of declarations No. 2.

3. When the filling of an apparatus comprises spirituous liquors of various kinds and various degree—low wines and imperfect spirits, for example—every kind of product shall be made to figure separately in columns 5 to 9, on lines united by a brace, with that which the first four columns express.

4. The superintending agent shall take pains to ascertain the volume and degree of spirituous liquors afforded to the rectifiers and to control by this means the exactness of the declaration. The verification to which they shall proceed on the quantities remaining in the vats or in casks after every filling, will enable them to recognize the quantities that have been extracted therefrom and to make sure of the real importance of the filling.

5. In shops where the work is conducted in such way that it is possible to ascertain the result of each rectification, this result shall be indicated opposite the inscription relating to each declaration. For this purpose only the back of each folio shall be filled at the beginning of the declaration. The front of the following folio, the title of whose columns may be modified in pen, shall serve to record (1) the volume and degree of the spirituous liquors withdrawn from the apparatus; (2) the corresponding quantity of pure alcohol; (3) the figure of waste in rectification; (4) the percentage of this waste as compared to the quantities put back into operation.

6. When the work of rectification concerns products entered in the storage accounts, that account shall be cleared of the quantities used in filling the apparatus, and the folio on which the act of discharge is inscribed mentioned in column 9.

INSTRUCTIONS.

1. The present register is intended to assure the execution of the provisions of article 27 of Regulation A of September 18, 1879, under the terms of which distillers who add to the fermented juices imperfect alcohols already entered are bound to make declaration thereof, and to enable the employees to recognize the volume and degree thereof.

2. The declarations of the kind are inscribed in register No. 2.

3. After having been present at the pouring of the spirituous liquors into the fermented liquids, the employees shall record the result thereof on a distinct line of the present register.

4. At the end of a day the various inscriptions made since the day before are summed up in columns 4 and 6. Below the total the previous totals are entered and a new sum is taken, so as to present every day the total of operation since the beginning of the operating season.

5. This daily settlement is signed by the employee who has established it.

6. If there is question of product already entered in the storage account, that account is balanced by an entry giving reasons in schedule 50 A for the quantity of alcohol added to the fermented liquid.

7. In distilleries where the entry is made in the general account of manufacture according to the first mode defined by article 15 of Regulation A, that account is also cleared of the quantity of alcohol thus put back into operation. For this purpose the employees proceed by diminishing the quantity of alcohol to which at the end of every day appears in memorandum book No. 5 B as having to be entered in the account of manufacture. In case that diminution is not practicable on the day itself, because it is found to be greater than the quantity appearing in the entry, the correcting of the situation would be postponed to the next day.

8. In shops subject to the second mode of entry, the operations of which do not involve any clearance in the account of manufacture.

9. Inspectors and controllers shall make sure, by frequent comparison between the various documents on which are entered the verifications of the service, of the exactness of the clearances made either in the storage account or in the account of manufacture.

INSTRUCTIONS.

1. The present register is divided into two parts. The first is intended to present the daily situation of vessels of largest size (vats, tanks, tuns, etc.) established in a stationary way in the storeroom to contain the product entered or to be entered in schedule No. 50 A; the second has for its purpose the inscription at the entrance and the issue from the storeroom of the spirituous liquors in kegs.

2. In order to avoid all confusion, a distinct account is opened both for the first and for the second part for every store or kind of product, to wit:

(1) Finished alcohols.
(2) Low wines and products to be redistilled.
(3) Essential oils.

3. Supplementary sheets in sufficient number are left between each account in order that the inscription which it contains may follow each other without interruption.

4. In the first part a quadruple column is assigned to each vessel. The kind (vats, tanks, or tuns) and the number of the vessels are

marked at the head of that column, which is so arranged as to indicate at every verification the height (in centimeters and millimeters), the volume, and the degree of the liquid contained in the receptacles, as well as the quantity of pure alcohol represented by that liquid.

5. In order that this condition may be fulfilled, it is indispensable that the gauging of each receptacle be made in such way that the capacity belonging to each section of 1 centimeter be determined with precision.

6. Every day a general verification of all the vessels shall be undertaken and the result thereof shall be inscribed on a single line. The agent charged with the operation records it by a vise entered in the column reserved for that purpose.

The records shall relate to all the spirituous liquors existing in the shop, either in vats or in tuns, with the exception of the products which are in the rectifying apparatus.

The essential oils shall figure in the present memorandum book as to their volume; as to the quantity of pure alcohol corresponding to the actual strength determined by the process indicated by paragraph 95 of the circular No. 275 of September 22, 1879.

7. Independently of this general status partial ones shall be established as often as possible (sec. 91 of circular 275). These partial verifications are recorded on distinct line below that on which is inscribed the last general verification.

In most cases it will suffice to confine oneself to ascertaining the height of the liquid contained in each vat.

8. When there is question of vessels entirely empty or filled up to the gauging point, the indication intended to show the height of the liquid is replaced, as the case may be, by the letter V (vide, empty) or by the letter P (plein, full).

9. It is not to be lost from view that there is no question at all here of the gauging vats specified in articles 16 of Regulation A, and 7 of Regulation A bis, which receive the alcohols before the entries are padlocked, and can not be opened except by the employees at the moment the products of distillation are withdrawn.

10. As regards the second part (spirituous liquors in kegs), the keeping of the register is exceedingly simple. As they enter into the storeroom the casks containing the alcohol are inscribed in the entries by number of order, and when they go out to be shipped or when the contents thereof are transfused the inscription relating to the going out is noted opposite the record of entry in such way that the entries corresponding to the lines remaining blank under the head of exit shall represent the shop, which must be found in kegs in the storeroom.

11. Before the general verification which shall serve as a base of the entry of each day the various storage accounts opened in schedule No. 50 A shall be exhibited. If the balance of one of these accounts shows an excess, that excess shall be added to the remainder for the entry.

ITALY.

LAWS RELATING TO THE TAX ON DISTILLED SPIRITS.

No. 86.] EMBASSY OF THE UNITED STATES,
Rome, November 15, 1894.

Hon. WALTER Q. GRESHAM,
Secretary of State.

SIR: Referring to the Department's instructions, No. 66, of October 12 last, desiring complete copies of the laws and regulations of the Government of Italy in regard to the use of methylated and unmethylated spirits of alcohol in the arts, I have the honor to inclose a copy of the Customs Bulletin, which I have to-day received from the foreign office, containing the regulations in force in Italy with regard to the use of spirits in the arts and industries.

I have, etc.,

WAYNE MACVEAGH.

GENERAL DIRECTION OF EXCISE.

[Official Bulletin XIX—Volume XXIX.]

MINISTRY OF FINANCE,
August —, 1889.

SUMMARY.

TAX ON PRODUCTION.

	Page.
No. 89.—Royal decree 6358 (series 3), which approves the only text of the laws on spirits	358
No. 90.—Royal decree 6359 (series 3), which approves the regulations for the execution of the only text of the law on spirits	392

TAX ON PRODUCTION.

No. 89.

Royal decree No. 6358 (series 3), which approves the only text of the laws on spirits.

AUGUST 29, 1889.

Umberto I, by the grace of God and by the will of the nation, King of Italy, having in view article 27 of the law of July 11, 1889, No. 6212 (series 3), by which authority is given to the Government, by which au-

thority is given by the King to coordinate and publish the only text of the laws on spirits with the modification established by the law above cited; having in view the royal decree of October 12, 1883, No. 1640 (series 3), which approves the only text of the laws for the tax on the manufacture of spirits, the law of April 2, 1886, No. 3754 (series 3); the law of July 10, 1887, No. 4665, (series 3); the law of July 14, 1887, No. 4703, (series 3); the royal decree of September 7, 1887, No. 4920, (series 3); the royal decree of December 25, 1887, No. 5124 (series 3), confirmed by the law of June 24, 1888, No. 5470, (series 3); the law of June 24, 1888, No. 5471, (series 3); the law of July 12, 1888, No. 5515, No. C., (series 3); the law of July 11, 1889, 6213, (series 3)[1]; having heard the council of state on the proposal of our minister secretary of state for finances—we have decreed and do decree:

SINGLE ARTICLE.

The only text of the law on spirits is approved, having been seen by our order by the minister secretary of state for finances.

We order that the present decree furnished with the seal of the state shall be inserted in the official record of laws and decrees of the Kingdom of Italy, commanding all those whom it concerns to observe it and cause it to be observed.

Given at Rome on the 29th day of August, 1889.

UMBERTO.
F. SEISMIT-DODA.
ZANARDELLI.

Sealed by the warden of the seal:

TITLE I.

TAX ON MANUFACTURE.

ARTICLE 1.

The international tax on manufacture of spirits and the additional tax at the frontier on spirits imported from abroad are established at the rate of 1 lira and 20 centesimi for every hectoliter and for 1° of the centigrade alcoholometer at the temperature of 15.56° C.

ARTICLE 2.

The following products with alcoholometric base, when imported from abroad, are subject to an additional tax, at the rate indicated below:

No. of the tariff.	Products subject to additional tax.	Amount of the additional tax.	Units of measure on which the additional tax is computed.
		L. C.	
5	Ether and chloroform	3.00	For every kilogram of ether and chloroform without deducting the weight of the immediate receptacles.
8	Spirituous essences of rum, cognac, and other spirituous liquors.	0.68	For every kilogram without deducting weight of the immediate receptacles.
66	Alcoholic perfumery	96.00	For every hundredweight without deducting the weight of the immediate receptacles.
73	Spirit varnishes	80.00	For every hundredweight of legal net weight.

ARTICLE 3.

Single or compound medicaments containing spirits, besides the tax incumbent on them as established by the tariff, must pay the additional tax on the quantity of spirits which they contain or which was consumed in their manufacture.

The placing of the additional tax is determined by the superior council of health, assisted by three chemists designated by the minister of finance and agriculture, industry, and commerce.

ARTICLE 4.

The manufacture of spirits, when there is not a question of agricultural distilleries, considered in the first two paragraphs of the following article 10, is subject to the supervision of the department of finance.

The quantity of the product on which the production tax rests is determined by a mechanical measurer to be applied to the first distillation.

During the term of repair of the measurer the product shall be directly ascertained by the agent of the administration.

ARTICLE 5.

The drawback to be granted on spirits of first distillation for diminution, and other accident to the manufacturer is determined at the following rate:

(*a*) Ten per cent for factories which distill starch and starchy substances (such as grain, rice, flour, potatoes), the residue of manufacture or refinery of sugar (molasses, etc., beet, and jerusalem artichoke).

(*b*) Twenty-five per cent for distilleries of alcohol from fruit, hulls of grape, dregs of wine, honey, and other material not comprised under letter *a*.

(*c*) Thirty-five per cent for distillation of wine.

In factories which distill material subject to a different drawback the distillation will have to be made in apparatus and at different times and the spirits will have to be kept in different rooms according as it shall be ordered by the regulation.

The rectification or any transformation of alcohol for which the production tax was made is exempt from duty.

The residues from rectification shall not be put into commerce unless they are methylated beforehand so as to exclude all possibility of their use as beverages.

The raw material used in the production of alcohol is not subject to consumption duty.

ARTICLE 7.

The manufacturer has no right whatever to any compensation or indemnity for any damage that may have accrued to him by interference or stoppage of work during the operation necessary for the application of measurement and the preliminary contrivances.

ARTICLE 8.

In factories subject to the obligation of admitting a measurer, the administration shall have the right to execute, at its own expense, as much as is necessary to apply said instruments and to occupy without indemnity the necessary space for the application of superintendence.

ARTICLE 9.

The application of the measurers and the permanent superintendence, for directly ascertaining the product in the nonagricultural distilleries and in those referred to by paragraph 3 of article 10 and article 11, is made with complete authority by the financial administration whenever it deems it requisite aside from the effect of declaration for the work on hand.

If the expert's opinion has been heard of which article 16 treats, this would avail to regulate the daily tax until the end of the operations begun.

In case of discrepancy between the technical office of the financial administration charged with the application of the measurement and the manufacturers regarding the nonagricultural character of the distilleries, the ministry of finance decides (General Direction of Excise).

ARTICLE 10.

For the purpose of this law those distilleries are considered agricultural which exist on ground owned by the manufacturer or cultivated by him, in which the spirit is derived from the distillation of the grape hulls, fruits, and wine exclusively produced on the ground itself.

The agricultural distilleries pay the tax at the rate of the daily productivity of the stills, determined according to the regulation established by the present law.

The administration, however, is authorized to apply the assessment of the production tax according to article 4 also to the agricultural distilleries, when the production of the spirits during the year exceeds 20 hectoliters of anhydrate alcohol. In such case the drawback of production shall be applied according to the method indicated in the following article.

ARTICLE 11.

If the proprietors of different properties unite in a cooperative association for the purpose of distilling in common and in one factory the material indicated under letters *b* and *c* of article 5, derived from the properties themselves, the measure of the drawback considered by that article is fixed at 30 per cent for the distillation of fruit of grape hulls and dregs of wine and at 40 per cent for the distillation of wine.

In regard to these factories, those provisions in regard to superintendence and record shall be observed that are set forth in paragraph 2 of article 4.

The factories not subject to permanent supervision by the financial administration shall pay the tax in proportion to the daily production of the still. This production is determined according to the capacity used in every still, according to the material employed, and the methods of distilling, taking into account all the circumstances that may influence the quantity of the product.

ARTICLE 13.

The amount of tax for every day of work is determined by the technical office of finance.

ARTICLE 14.

When the manufacturer declines to admit the determination of the production and of the daily tax indicated to him by the administration, he must, within twenty days of the notification, present a demand for

an expert judgment to the prefect of the province by means of the impost agency taking a receipt therefrom.

The manufacturer shall furthermore give a guaranty to the agent for the payment of the expenses of the expert judgment.

ARTICLE 15.

The demand for an expert judgment is not admitted if the manufacturer—

(*a*) Has not declared the tax which he is disposed to accept.

(*b*) Has not taken upon himself the obligation to pay during the time necessary for settling the controversy the tax established by the administration, saving the right for compensation or reimbursement.

(*c*) Has not given the required guaranty for the expense for the expert judgment.

If the demand for an expert judgment is not admissible, the prefect declines it by means of the agent of the impost.

If the recourse is admissible, the prefect proceeds to obtain the expert judgment.

For this purpose there is established in every chief place of a province a committee of experts composed of three members resident there and selected by a commission, consisting of the prefect, superintendent of finance, and the president of the tribunal, which meets for the purpose in the month of September of every year upon the invitation of the prefect, who is the chairman.

The persons who may be elected as members of the committee are engineers, bachelors of physical science, and licenziati in agricultural science of the high schools of the Kingdom.

The committee elects its president and remains in office until the committee of the following year is appointed.

ARTICLE 17.

The committee or its president, in case other members fail to appear, may order the experiment which may be necessary and shall invite the chief engineer of the technical office of finance to be present thereat.

The committee in determining the daily production must keep account of the data of facts ascertained by the financial administration and take exclusively for its base the direct factors on which that administration depends, excluding stoppages, and other accident of manufacture of spirits for which the law grants special drawback. It must thereupon always express its decision, specifying and arguing the criteria on which its decision is based.

ARTICLE 18.

The expert committee must make its decision within one month after receiving the demand for recourse.

When that date has passed and no deliberation has taken place on the recourse, the prefect may pronounce the discharge of the committee itself from its office and pass on to appoint another committee.

The decision of the committee with its arguments is immediately communicated to the parties concerned by the prefect.

ARTICLE 19.

The recourse against the decision of the committee must be presented within two weeks of the notification of the decision itself to the office of the secretary of the prefecture, taking a receipt therefor.

The prefect having received the demand for recourse within the time fixed proceeds to arrange for the revisionary judgment.

ARTICLE 20.

To decide on cases of appeal against judgment of the committee, there is established a central commission for the tax on the manufacture of spirits residing at Rome.

This commission shall be composed of five members, two of whom shall be delegated by the ministry of finance, two by the ministry of agriculture, industry, and commerce, and one by the council of agriculture, chosen from among persons of recognized technical competency.

ARTICLE 21.

The central commission is nominated by decree of the ministry of finance every year, in the month of November, and shall hold its meetings at the office of the minister of finance; it shall appoint its own president.

If the votes in the deliberations of the commission are equal, the vote of the president shall decide.

In order to render the deliberations valid, the presence of at least three delegates shall be required. The members of the said commission remain in charge until the commission of the following year is established.

ARTICLE 22.

Appeals against the decisions of the expert committee are transmitted to the central commission by the prefect through the medium of the ministry of finance.

The appeal shall be accompanied by a report on the state and production of the factory to which it refers, and by a schedule showing the taxation in force in the province, to be compiled by the chief engineer of the technical office of finance.

ARTICLE 23.

The commission shall proceed to its deliberation within the space of two months after receiving the appeal, and shall communicate their result to the parties concerned through the medium of the prefect.

ARTICLE 24.

The tax becomes definitive—

(*a*) When the time established has elapsed and the manufacturer has not made appeal to the prefect to have the expert judgment pass.

(*b*) When the parties have not entered an appeal within two weeks after being notified of the first judgment.

(*c*) When the central commission has pronounced on the appeal.

(*d*) In case the appeals are declared inadmissible by the prefect.

ARTICLE 25.

The expenses of the procedure, on the basis of the liquidation of the president, are determined from time to time by ministerial decree and apportioned among the parties, in proportion to their respective final liability.

ARTICLE 26.

The liquidation of the tax is made every two months. The collection is made one month after the liquidation, in the manner and with the form established by the royal decree of May 14, 1882, No. 740 (series 3).

Manufacturers must give security corresponding to the presumable amount of the tax from one payment to the other.

For manufactories of spirits provided with measuring apparatus or subject to permanent superintendence, the ministry of finance is authorized to order that the tax be paid directly into the treasury of the state.

The security for these factories may also be given by means of the first mortgage on the factories, or on other goods of stable value or by means of joint security of two persons in good financial standing, accepted by the superintendent of finance.

ARTICLE 27.

In case of suspension of work of the factory, which is treated of in paragraph 3 of the preceding article, the date of payment of the tax is temporarily postponed for not more than two months.

This concession, always within the limits of the security above mentioned, shall cease as soon as the work is resumed.

ARTICLE 28.

The spirits produced in nonagricultural distilleries and in those agricultural distilleries in which the measuring apparatus is applied shall be guarded in suitable storerooms annexed to the distillery, which shall be considered as rooms of production, and subject to the provisions of the customs law for private deposits.

The manufacturers who pay the production tax directly into the treasury may be exempted from the security prescribed in the preceding article 26 when they agree to pay the tax itself in proportion to the taking out of the spirits from the storerooms, the manufacturers' debt on the basis of the two months' liquidation remaining unaltered.

Provision will be made by royal decree for the balancing of the account of the manufacturer determined by the successive two months' liquidation by the register of deposits of the spirits.

By way of exception, after previous compliance with the provisions that will be established in the regulation, the alcohol produced in the factories indicated in the preceding article may for the purposes mentioned in the article itself be kept also in a storeroom not annexed to the factories.

This storeroom shall be considered as a place of manufacture and shall be subject to the provision of the customs law for private deposits. In regard to the payment of the tax on alcohol deposited in the said storeroom the provisions of the preceding article shall be applied.

Under the conditions established in the regulations the benefit on the deposit of spirits in storerooms assimilated to customs deposits is also exempted to wholesale dealers.

In the two cases considered in the preceding article the expenses for the superintendence shall be incumbent on the interested parties.

ARTICLE 30.

Permission is granted to manufacturers of liquors called cognac to prepare and keep in special storeroom assimilated to private customs deposit, or in trust deposits, the spirits of the factories which distill wine.

The passage of the spirits of pure wine from the deposit to the storeroom intended for the preparation of liquors called cognac is secured by permit.

The liquors called cognac not produced exclusively from spirits of wine shall not be admitted to the deposits and shall not enjoy the drawback spoken of in the present article.

On the total quantity of spirits introduced into the distilleries for the manufacture of liquors called cognac, there shall be granted the drawback of 7 per cent under the title of rebate refinements and storage.

For periods of less than one year the rebate shall be liquidated monthly.

ARTICLE 31.

Permission is given to the managers of nonagricultural manufactories of spirits, and to the managers of agricultural manufactories provided with measurers, to introduce the spirits intended for exportation both in native and mixed wines, in customs deposit. In this case the relief from the internal production by means of deductions from records of manufacture shall be made in presence of certificates of introduction into deposits of the spirits, which thereafter shall be considered for all purposes as foreign.

ARTICLE 32.

The transportation of spirits from the manufactories to the rectifying shops, to the deposits mentioned under paragraph 3 of article 29, to the establishments for the preparation of cognac mentioned in article 30, to those for the improvement of wine mentioned in the following article 33, and to the deposits for industrial purposes mentioned in article 34, is subject to permit and to certificate of discharge.

ARTICLE 33.

The reduction of 25 per cent on the production tax is granted on spirits of wine of a degree of purity to be determined in the regulation, and on pure ethylic alcohol used in the alcoholization of wine and fermented must, to increase the natural alcoholic strength of deboli wine and for the preparation of tipici wine.

Such reduction is subject to the following conditions:

(*a*) That the spirits be intended to increase the alcoholic strength up to the degree fixed by royal decree.

(*b*) That the spirits added to the mixtures shall not exceed in any case 2 liters of anhydrous alcohol for every hectoliter.

(*c*) That the mixture be effected under the superintendence of the agent of finance in the authorized deposits of spirits or by means of special permit in private magazines on companies, producers, and dealers of municipalities or other local bodies.

ARTICLE 34.

The relief from the tax on spirits in favor of industries which use it as raw material is applied to the manufacture of vinegar and oenolin.

Such relief shall take place by means of a drawback on the tax due on the spirits produced in the national factories provided with measurers or subject to permanent superintendence or on the additional tax to which alcohol introduced from abroad is subject.

Manufactures of oenolin, however, are given the option to demand the direct restitution of the tax, in which case they may be required to prove the origin of the spirits.

ARTICLE 35.

For spirits to be used in the manufacture of vinegar, the drawback of tax is established at the rate of 50 lire for every hectoliter of spirits at 100°.

For spirits used in the manufacture of œnolin, the entire tax shall be refunded.

ARTICLE 36.

According to article 34, the persons exercising one of the industries indicated in the said article shall report to the superintendent of finance of the province, indicating the location of the factory and the method in which the spirits are employed. He must furthermore provide for the deposits and keeping of the spirits a storeroom, which shall fulfill the condition established for private deposits, and he shall subject himself to the obligation of bond and to the responsibility for deficiencies exceeding the limit of tolerance under the terms of articles 46 and 72 of the customs regulation.

ARTICLE 37.

Within two weeks from the date of report, the office of finance shall ascertain whether the room specified presents the desired condition, and in default provide, at the expense of the owner, all the appliances that may have been prescribed, also the receptacles for keeping the spirits, which shall be provided with graduated indicators with indication of volume.

The verification of the factory shall be effected by means of an appended protocol, in which there shall also be indicated the method of production, the mean daily product of the factory, and the percentage of alcohol used.

ARTICLE 38.

In order to undertake the operation, the manufacturer shall present at least forty-eight hours ahead the declaration thereof to the technical office of finance, indicating the origin and quantity of spirits to be used, the duration, and the number of hours per day of operation.

ARTICLE 39.

The transportation of spirits for industrial uses is subject to permit and to certificate of discharge.

Security must be given for the additional tax or for the tax to be refunded.

The technical office shall provide for the verification of the spirits to correspond with the permit, and when it does not find any irregularity, it authorizes the introduction thereof into the storeroom in the presence of the agent of finance, and other entry of the declaration on a suitable register which shall contain two parts, one for the entry and the other for the discharge.

On the basis of the declaration thus converted into a certificate of deposit, the requisite annotation of discharge shall be made on the permit, it being reserved to the customs of departure to recover from the

bondsmen the additional tax on any eventual deficiencies found on arrival in the factory when there is question of spirits from abroad, and to the technical office of finance of the province in which the factory of spirits is situated, to diminish by the quota of tax corresponding to the deficiencies the deduction from the records of manufacture itself, when on the other hand there is question of homemade spirits.

Under the head of charge, there is entered the spirits which enter into the storeroom, and under the head of discharge, those which are drawn out for industrial employment, and corresponding to this there shall afterwards be indicated the quantity of products obtained.

ARTICLE 40.

The procedure is the same as concerns the presentation of the declaration, the introduction of the spirits into the storeroom and the registry, and the successive discharge on the register in case of manufactories of oenolin for which the direct refund of the tax may have been demanded.

ARTICLE 41.

Any introduction in the abovesaid storeroom shall amount to at least 3 hectoliters of alcohol at 90° of the centigrade alcoholometer, and shall not take place more than once a month.

ARTICLE 42.

No part of the spirits shall be withdrawn from the storeroom without previous declaration on the part of the manufacturer and without the presence of a delegate of the financial administration.

It is also forbidden to withdraw spirits of any kind from the factory unless any residual tax be paid beforehand.

The delegates shall ascertain the quantity and degree of the spirits withdrawn, and the further employment to be made thereof.

For factories of œnolin the said delegates shall further ascertain, by means of direct measurement, the quantity and degree of the spirits used for the infusion of grape hulls or other substances containing that product and the quantity and degree of spirits residual from the distillation for the preparation of œnolin.

ARTICLE 43.

For the manufacture of vinegar, it is necessary that besides the storage register there be kept another register, which shall show—

(*a*) The quantity and quality of spirits introduced into the storeroom.

(*b*) The quantity and quality of the selfsame spirits withdrawn daily from the storeroom to be used in manufacture.

(*c*) The quantity of daily product of the factory.

(*d*) The quantity and destination of the product exported from the factory.

ARTICLE 44.

In the manufactories of œnolin the agent charged with the permanent superintendence shall keep a special register of charge and discharge, to note therein as the operations are carried out the spirits used and those recovered after the distillation.

The distillation of alcohol for the extraction of œnolin shall be accomplished by apparatus exclusively intended for this purpose. To ascertain the quantity, the spirits shall be gathered in a graduated receptacle in secure communication with the distilling apparatus, the administration having the right to apply thereto the mechanical measurer.

ARTICLE 46.

For factories of œnolin the drawback or restitution of the entire tax relates to the spirits actually consumed in preparation of the said product. For this purpose, when there is question of a drawback, no sooner shall the operating season have passed than the tax on the quantity of spirits not consumed shall be liquidated, and be paid by the manufacturer of œnolin directly into the treasury in a single installment within eight days from the date of notification. In case of delay, a fine of 4 per cent on the sum remaining unpaid shall be applied.

This provision is not applied when the residual spirits are reintroduced into the storage room.

ARTICLE 47.

Both in case of drawback and in case of restitution the vine hulls and other materials which have served for the extraction of œnolin shall, immediately after being pressed, be distilled in the same factory of œnolin with apparatus specially intended for this purpose, and the spirits recovered therefrom ascertained by the superintending agent or by means of a mechanical measurer shall be considered as residue of manufacture of œnolin and deducted from consumption.

ARTICLE 48.

The manufacturers of œnolin who may have demanded the direct restitution of the tax shall, in order to obtain it, demand it by means of stamped paper of 50 centesimi addressed to the superintendent of finance.

The demand shall be provided with the adjustation of the technical office regarding the quantity and degree of the alcohol actually consumed.

ARTICLE 49.

Both for the manufactories of vinegar and those of œnolin the administration of finance have the right to take stock at any time of the spirits in store.

When deficiencies are found exceeding not only the rebate on storage established in article 46 of the customs regulation, but also the tolerance of 2 per cent of the entire contents of the storeroom, there shall be applied the fine established in article 72 of the regulations themselves.

This is independent of the obligation of the manufacturers to pay the tax whenever there is question of drawback.

TITLE II.

TAX ON SALE.

ARTICLE 50.

The tax on sale of spirits intended for internal consumption in the States is determined at the rate of 0.20 lire for every hectoliter, and for 1°.

This tax does not apply to spirits intended to increase the natural alcoholic strength of wines according to the provisions established in article 33 of the present law.

ARTICLE 51.

The payment of the tax on sale for spirits intended for consumption takes place—

(*a*) On exit from the customs office from customs deposits properly so called or those assimilated to them.

(*b*) On exit from the factories.

(*c*) On exit of spirits from the rectifying shop.

The tax of sale shall be ascertained directly in all the factories.

The rebate to be granted to manufacturers on the quantity of spirits subject to the tax on sale is established at the rate of one-tenth of the drawbacks indicated in article 5 of the present law.

As for spirits, so for liquor, wines, and for alcoholic beverages, and for other products containing spirits imported from abroad, the tax on sale shall be collected at the same time as the customs duty and the additional tax of manufacture.

ARTICLE 52.

Under the terms of the present law retail sale is understood to mean that relating to quantities not above 4 liters.

The act of selling at retail is considered as the opening of an unauthorized business, and shall compel prosecution for contravention.

ARTICLE 53.

Nobody shall sell by wholesale or by retail spirits or alcoholic beverages without having previously obtained license therefor from the financial superintendence of the province. This license is annual and is valid for the solar year in which it has been issued.

Those who carry on several establishments of sale shall obtain the license for each, and those who carry on the commerce in spirits and alcoholic beverages both at wholesale and at retail shall obtain two distinct licenses.

ARTICLE 54.

Wholesale dealers in spirits and alcoholic beverages are obliged to declare their places of deposit.

ARTICLE 55.

Manufacturers of spirits, rectifiers, and wholesale dealers in spirits and alcoholic beverages are obliged to keep special registers, in which there shall be placed on evidence the daily movements of the spirits and alcoholic beverages.

ARTICLE 56.

Whoever carries on a business for the rectification of spirits is obliged to report it to the superintendent of finance of the respective province.

The shop is subject to the permanent superintendence of the financial authority.

ARTICLE 57.

When spirits subject to the tax on sale issue from the factories mentioned in article 4, from agricultural distilleries subject to direct ascertainment of the production tax, from corporated distilleries mentioned in article 11 of the present law, or from rectifying shops, they shall be accompanied by a certificate of payment issued by the financial office.

The said agricultural distilleries and the cooperative distilleries shall be provided with the rooms annexed to the factories, under the terms of article 28 of the present law.

When the spirits subject to the tax on sale issue from the other factories, they shall be accompanied by a certificate of legitimation which shall be issued by the financial office according to the provisions which shall be prescribed by the regulations.

ARTICLE 58.

The certificate of payment and of legitimation issued from the transportation of spirits are equivalent to the certificate mentioned in article 56 of the customs regulation.[1]

ARTICLE 59.

The provisions of article 32 of the present law relating to the production tax are applicable also to the tax on sale.

The quantity on product of the factories taxed on their daily production intended for rectification shall be deducted from the total quantity ascertained for the purpose of the tax on sale under the terms of article 50.

ARTICLE 60.

Spirits and alcoholic beverages issuing from storage rooms of wholesale dealers in quantities above 4 liters shall be accompanied by a certificate of legitimation issued by the financial offices or by the dealers themselves according to the regulation under the present law.

ARTICLE 61.

The transportation by railway of spirits or alcoholic beverages is not allowed unless they are accompanied by certificates of payment, of permit, or legitimation. Those certificates shall be countersigned by the administration of the railways at the moment when the goods are presented for shipment, and at the moment when they are consigned to the destination.

ARTICLE 62.

For spirits which are transported on ordinary roads the certificates of payment, of permit, or legitimation may be compared while on the road, and at the moment of arrival they must be presented to the financial office, or, in default thereof, to the syndic of the community to which they are shipped.

ARTICLE 63.

In order to facilitate the commerce carried on within the precinct of closed communities, the Government of the King, upon the advice of the council of state, is authorized to provide by special ordinance to be issued by royal decree that on entering into the communities themselves the certificates of payment, permits, and legitimation accompanying the spirits of alcoholic beverages shall be examined. In that case the circulation of the spirits of alcoholic beverages within the precinct of closed communities is free and the wholesale dealers are excused from the formalities mentioned in articles 54 and 55 of this law.

---

[1] See p. 312, Vol. I.

TITLE III.

RESTITUTION.

ARTICLE 64.

In cases of exportation abroad, the tax is refunded which has been paid in the country on spirits, both natural and under the forms of liquors, must, or improved wine, in barrels or bottles, at the rate of 90 per cent.

For wines that are exported, when the persons interested demand it, the entire tax on the added spirits shall be restored whenever the mixture of the spirits is effected under the superintendence of the administration in the forms and under the precaution established by the regulation.

Beginning from October 1, 1889, the reimbursements or drawbacks of the tax on spirits added to the wine shall be subject to the employment of pure ethylic alcohol or spirits of wine to a degree of purity to be determined in the regulation. The mixtures with foreign spirits shall also be subject to this condition.

The method of ascertaining the quality and the determination of the degree of alcoholic strength of spirits to be used in the mixture shall be indicated in the regulation.

ARTICLE 65.

For spirits derived from home factories and exported abroad, either pure or added to wine, the drawback of the tax shall take place by means of a deduction from the record of manufacture.

The deduction shall be made conformably to the certificates of exit, and if there is question of spirits added to wine in conformity to the protocol of inspection of the mixture compiled by the agent of the administration.

The provisions contained in the decrees of the ministry of finance and inserted in the official collection of laws and decrees of the Kingdom of Italy under date of August 31, 1888, and February 22, 1889, relating to the determination of the natural strength of Italian wine for the purpose of reimbursement of the tax on spirits, shall remain in force so long as the causes may continue by which they were brought about.

The revocation of the decrees themselves shall be effected by royal decree upon deliberation of council of ministers. The royal decree is immediately presented to the Parliament to be made a law.

ARTICLE 67.

In case homemade wine improved with homemade spirits is returned from abroad, for which the tax on production has been refunded, if the reimbursement has already taken place, the special duty on wine shall be collected, the refunded sum shall be recovered, and a fine equal to that sum shall be imposed. If the reimbursement has not yet taken place it shall be refused, and measures shall be taken to collect the special duty on wine and a fine equal to the sum which should have been refunded.

ARTICLE 68.

n the return of the goods referred to in the preceding article is ›y the consent of the administration after regular demand by the interested, the imposition of the fine shall be omitted.

TITLE IV.

PENAL PROVISIONS.

ARTICLE 69.

ıders against the provisions of the regulation intended to secure ›servation of the measuring instrument shall be subject to the es established by the single text of the law approved by royal of September 13, 1874, No. 2056 (series 2).

ARTICLE 70.

:landestine [illicit] manufacture of spirits shall be punished by a ıal to the product and to the output in alcohol from the raw alco- ınd alcoholizable material present in the factory and in the d rooms at a rate not less than the tax on production and sale t greater than ten times that amount.

ARTICLE 71.

clandestine [illicit] distillation of spirits shall be furthermore ed with the confiscation of the apparatus, the raw material, and ›duct, in addition to the pecuniary afflictive penalties established customs law.

ARTICLE 72.

presence of raw material which is alcoholic or capable of being ized, different from that declared for operation in the rooms of rit factory and in those for the rectification and transformation ›pirits, is illegal and shall be punished by a fine of from twice to mes the tax corresponding to the output in alcohol of the entire ;y of the material itself.

ARTICLE 73.

e who carry on one of the industries mentioned under article 34, lirectly or indirectly withdraws or tries to withdraw spirits drawn ıe storeroom, from the employment for which it is destined, shall ect to a fine of not less than double nor greater than ten times paid production tax based on the quantity of spirits taken out lently.

ARTICLE 74.

spirits and alcoholic beverages which are transported without ›ccompanied by certificates of payment or legitimation or by cer- s for which the time of maturity is overdue, as well as those ıre found to be in excess of the written charge of the wholesale nes, shall be subjected to the payment of the customs duty, of litional production tax, and of the tax on sale, besides a fine that › extended from double to ten times the taxes mentioned.

ARTICLE 75.

Besides the cases mentioned in the present law, any action or omission, by means of which spirits are withdrawn, or attempt is made to withdraw them from the tax on sale, or part of it, shall be punished with a fine from double to six times the general tax on sale.

ARTICLE 76.

The wholesale and retail commerce in spirits and alcoholic beverages carried on without license shall be punished by a fine of from 50 to 500 lire.

ARTICLE 77.

The irregular keeping of register, mentioned in article 55, by which it is rendered impossible to ascertain the movements of the spirits, shall be punished by a fine of from 5 to 250 lire.

The absence of register and the refusal to present it to the agent of finance shall be punished by a fine of from 50 to 500 lire.

ARTICLE 78.

Whatever be the terms of the regulation established by the present law for the manufactories of vinegar and œnolin, besides the penalties above mentioned, the factory shall, for the period of one year, be deprived of the privilege of drawback or restitution.

TITLE V.

VARIOUS PROVISIONS.

ARTICLE 79.

The expenses of record and the superintendence required for the collection of the tax on the manufacture and sale of spirits shall be charged to the state.

ARTICLE 80.

The following shall be charged to the persons exercising the industries indicated in article 34: The expenses of living away from their residence, incurred by the delegates of the administration in virtue of the special regulation.

ARTICLE 81.

The Government of the King is hereby authorized to prohibit the sale of spirits for beverages when it is ascertained that they have not attained that degree of rectification which is deemed necessary, after having consulted the superior board of health in the interests of public hygiene.

ARTICLE 82.

Within six months after this law goes into effect there shall be published a special set of regulations to be approved by royal decree upon the proposal of the ministers of the interior and of finance and the consent of the council of state, for the execution of the provisions of the present law which have the character of a hygienic provision.

ARTICLE 83.

So long as it is not possible to ascertain directly the production tax under the terms of article 4 of the present law in the factories which distill wine hulls and wine, the provisions contained in the first heading of article 10 shall also be valid for nonagricultural distilleries.

ARTICLE 84.

Persons conducting agricultural spirit factories to which the measurer is not applied may, until the end of 1889, place in deposit the spirit produced by them in suitable magazines, which shall be considered as places of production and be subjected to the provisions of the customs law for private deposits.

In that case the production tax due shall be paid in proportion as the spirits are withdrawn from the magazines.

The present provisions shall be applied within the limits and under the precautions prescribed by royal decree.

ARTICLE 85.

Up to the end of 1889 the deposit of spirit may be made not only in nature, but also mixed with wine and must within the limits and under the precautions prescribed by royal decree.

All the expenses of superintendence arising from the execution of the present and preceding articles shall be charged to the manufacturers.

ARTICLE 86.

For the first year of the application of the present law the drawback mentioned in article 5, letter *c*, for the distillation of wine shall be 40 per cent.

The manufacturers who previous to September 1, 1889, shall declare that they wish to produce spirits of wine, and will subject themselves to the liquidation of the production tax at the rate of the product effectively ascertained, shall be admitted to enjoy the drawback considered in the present article beginning from the day of publication of the law of July 11, 1889, No. 6212 (series 3).

But the spirits of wine thus obtained shall be kept in special storeroom assimilated to the customs deposit and shall not be withdrawn thence, nor be put into commerce in the state nor exported, until after August 31 of the present year, (1889).

ARTICLE 87.

The present law shall take effect on the 1st day of September, 1889. From the same day forward the restitution or drawback of duties for cases of exportation, considered in article 64, shall be made, taking as a basis the measure of the taxes fixed by articles 1 and 50 of this law.

ARTICLE 88.

For spirits subject to the present production tax on the date when the present law becomes operative in the deposits of factories assimilated to customs deposit, the tax shall be due in the measure indicated in article 1.

For the spirits in regard to which the payment of the tax is guaranteed by means of bond, the liquidation of the payment not yet executed

shall be at the rate of the tax mentioned in article 1, provided there exist deposits covering the product.

In no case shall the production tax or that of the tax of sale already paid be refunded by the effect of the present law.

ARTICLE 89.

The Government of the King, by advice of the council of state, shall revise and rearrange the regulations now in existence on the taxes on spirits conformably to the provisions of the present law and shall determine—

(*a*) The provisions that may be necessary to remove the danger of fraud to the department of finance.

(*b*) The rooms to be furnished gratuitously in the factories to the agent charged with the permanent superintendence.

(*c*) The rules for the drawing up of inventories to be made in establishments subject to permanent superintendence.

(*d*) The writing to be kept for the liquidation of the tax.

(*e*) The standard for the presented determination of the daily tax commensurate to the production in alcohol in the factories.

(*f*) The declarations which the manufacturers and the owners of stills shall present, and the precaution intended to prevent their illicit use.

(*g*) The methods to be observed for the application of the instruments indicated in article 4.

(*h*) The routine and other conditions for the collection of the tax, for the superintendence, for the contravention and the penalties to be applied within the limits established by the law of July 3, 1864, No. 1827, of the legislative decree of June 28, 1866, No. 3018, and by the present single text of the law.

(*i*) The method for the restitution on passing out of the Kingdom of the tax on spirits, both natural and under the form of liquors, must, or improved wines.

(*l*) The methods to be followed to reduce the weight of the spirits imported from abroad in proportion to the capacity, and to determine the dead weight of the cask.

Sealed by order of His Majesty:

F. SEISMIT-DODA,
Minister Secretary of State for Finances.

Royal decree No. 6359 (series 3), which approves the regulation for the execution for the single text of the laws on spirits.

AUGUST 29, 1889.

Umberto I, by the grace of God and by the will of the nation, King of Italy, in view of article 29 of the law of July 11, 1889, 6212 (series 3) which gives authority to the Government of the King to revise or arrange the regulation in existence regarding the tax of spirits conformably to the provisions of the said law and of the single text which was approved with our decree of to-day, having taken the advice of the council of state on the proposition of our minister secretary of state for finances, we have decreed and do decree:

SINGLE ARTICLE.

We approve the united regulation for the execution for the single

text of the laws on spirits seen by our order by the minister secretary of state for finances.

We order that the present decree provided for the state be inserted in the official collection of laws and decrees of the Kingdom of Italy commanding everyone concerned to observe the same and to cause them to be observed.

Given at Rome on the 29th day of August, 1889.

UMBERTO.
F. SEISMIT-DODA.

The keeper of the seal.

ZANARDELLI.

TITLE I.

PRODUCTION TAX.

CHAPTER I.

Manifestation of factories, of rectifying shops, and distilling apparatus.

ARTICLE 1.

Whoever intends to establish a manufactory of spirits, subject to the obligation of having a measurer and to permanent superintendence, shall present at least twenty days before beginning the work a manifestation in duplicate accompanied by a plan of the workshop and exact description of its parts.

The manifestation shall indicate—

1. The residence and name of the manufacturer and of the persons who represent it in case of deduction.
2. The community, the street, and number where the factory is to be opened.
3. The day on which the factory will be opened.
4. The rooms of which the factory will be composed, and the use for which each one is intended—designating especially the rooms for the deposit of spirits. When the deposits of the spirits aside from the effect of the tax on sale is to serve also for relief from the fund required for the production tax, it will be requisite to note this in the manifestation. Also, in case the raw material to be used is admitted at a different drawback it will be necessary to specify the respective rooms of deposits of the spirits.
5. The receptacles, vessels, and apparatus for the heating and the preparation of materials which are used in the manufactures as well as those for the elaboration and deposits of the products, with the indication of the capacity for each one of these, the nominal strength, and the effective strength in horsepowers of the driving engine.
6. The system to be followed for the production.

ARTICLE 2.

The manifesting of agricultural factories not subject to the obligation of carrying a measurer and to permanent superintendence may be made only eight days before beginning the work, and it suffices if it contains data mentioned under the preceding numbers 1, 2, and 3, as well as the number and capacity of the apparatus and material to be used for distillation.

ARTICLE 3.

In order that a distillery may be considered agricultural, it is requisite that in the manifestation there shall be cited the number of the cadastra and the title of proprietorship, if there is question of a proprietor; or the date of the act, lease, or settlement, or duly registered, when there is question of property cultivated by the manufacturer but not belonging to him. In virtue of article 11 of the single text of the law, corporations must prove in the manifest the fulfillment of the conditions provided in article 220 of the Commercial Code.

ARTICLE 4.

Those who intend to establish a rectifying business must in their manifest comprise the indications mentioned in article 1, and specify the rooms for the deposits of the food or rectifying spirits.

Whenever there are introduced in the rectifying establishments any spirits for which the tax on production and sale has not been paid, or on which only the tax on production has been paid, or on which both taxes have been paid, it will be requisite that the deposits, both of the crude and rectifying spirits, be kept distinct in as many compartments or in boxes separated from each other.

ARTICLE 5.

The rooms, including those for deposits of spirits, the receptacles, vessels, and other apparatus, must be externally numbered and countersigned in a durable and visible way by the manufacturer and rectifier.

Outside of the receptacles and apparatus the manufacturer and rectifier shall take care to indicate the capacity in metric measure corresponding to the indications of the contents. Furthermore, all the receptacles of raw and rectified alcohol shall be provided, at the expense of the producer, with a staff graduated to hectoliters and some multiples as well as an indicator of level.

In the establishment for rectification the boilers of the rectifying apparatus shall also be provided, at the expense of the producer, with a graduated staff and the indicator of level as well as a small stopcock for taking samples. These orders are not applicable to agricultural factories for which the tax is ascertained on the basis of the daily production, except so far as regards the obligation to number and countersign the distilling and rectifying apparatus.

ARTICLE 6.

The obligations to make the manifest is extended to all the holders of distilling, rectifying, or transforming apparatus, including chemists and pharmacists, whatever be the use for which such apparatus be intended, and even if the owner does not intend to use it.

Only public, scientific institutions are exempt from the obligation to make a manifest for stills of a capacity less than 20 liters used exclusively for scientific purposes.

The manufacturers and the sellers of distilling apparatus shall declare to the technical office of finance of the province, the name, surname, and residence of the purchaser, or lessee, of the apparatus.

For apparatus coming from abroad, the customs department inform the technical office of the name, surname, and residence of the persons to whom they are sent.

ARTICLE 7.

For movable stills and for those intended to be rented or loaned it is not requisite to renew the manifest at every transfer of the still, provided that in the original manifest the owner makes note of that circumstance, and provided that the user of the still cause to be consigned to him by the lender the manifest and the protocol of verification.

ARTICLE 8.

The manifest shall be presented to the technical office of finance of the province in duplicate without canceling or erasures. For agricultural distilleries it may also be sent to the said office by mail, by registered package without paste.

One of the originals, provided with the indications of the day on which it was presented and with the seal, is sent back by the technical office to the maker of it, who is obliged to keep it in the factory and to exhibit it to the agents delegated for superintendence whenever they demand it.

Such return may also be effected by the technical office through the medium of the syndic of the community where the distillery is located.

CHAPTER II.

Verifications of the factories, the rectifying establishment, and the distilling apparatus.

ARTICLE 9.

The manifest mentioned in the preceding chapter having been prepared, the factory or the rectifying establishment or the distilling apparatus shall be verified by the technical agent of finance.

The verification takes place in the presence of the person interested or of his representative, and a protocol thereon is drawn up in duplicate. The person interested may also cause a person in whom he has confidence to be present.

The verification has for its purpose to ascertain the indications of the manifest, and to measure the apparatus mentioned in number 5 of article 1.

The rooms for the deposit of the product must be provided with iron bars and grating at the window, must not have any internal communication with other rooms, and must present all those conditions of material security which according to each case may be required by the administration regarding the receptacle for keeping the spirits. They must furthermore have a single store provided with two locks with different keys and combinations, furnished and applied at the expense of the manufacturer, and under the care of the technical office. Of the said keys one shall be kept by the person interested; the other by the agent of finance.

Only in case the factory absolutely lacks a suitable room, and it be not possible to provide one by means of adaptation, the spirits may be kept in a store room not annexed to the factory itself, provided it be not distant therefrom less than 1 kilometer.

For agricultural distilleries, where there is no suitable room and where the expense of providing one would exceed 50 lire, the use of a separate magazine shall be permitted as above.

The apparatus of distillation and recognition shall be identified by means of special numbered tickets; the others shall be countersigned

with a progressive number. In the protocol [license] there shall be further set down the work to be done by the manufacturer for the exercise of an efficacious superintendent.

The ministry of finance shall take cognizance of objections raised by the manufacturer.

A copy of the protocol [license] is sent to the manufacturer, who is obliged to keep it in the factory and to exhibit it at every demand of the delegates of superintendence.

ARTICLE 10.

As soon as the verification has been completed and the prescribed work executed, the factory may be opened.

ARTICLE 11.

No innovation in the change of affairs set forth in the record of verification shall be introduced in the factory where the measurer and the permanent superintendence are applied, nor in the rectifying establishments, unless manifest thereof be made to the technical office at least twenty-four hours in advance. The work having been completed, the technical personnel of finance introduces the changes in the protocol [license], if it be necessary.

For the other factories the manifest of the modification in the producing apparatus in the quality of the raw material being used and in the condition of work shall be made at least three days in advance.

In every case, innovations which require new works of adaptation for the application of the measurer, shall be carried out under the care of the administration at the expense of the manufacturer.

CHAPTER III.

Obligation of the manufacturers, rectifiers, and transformers of spirits, and the owners of distilling apparatus after the verification.

ARTICLE 12.

From the moment of the verification of the factory, the manufacturer, the rectifier, and the transformer of spirits are bound to keep intact the indications in the receptacles, vessels, and apparatus, and to give notice at once of alteration or damages that may have occurred, giving causes which were unavoidable.

The manufacturer, the rectifier, or the transformer of spirits who intends to give up his industry entirely, as well as mere owners of apparatus who wish to dispose thereof, must inform the technical office; and only when the delegate of finance has removed the seal and ticket attached to the distilling apparatus which must be taken off, shall they be released from the obligation of keeping the indication in the rooms and on the manufacturing apparatus.

The owners of fixed or movable apparatus which they wish to sell, to lease, to rent, or to lend shall at least twelve hours beforehand notify the technical office, indicating the name and residence of the persons to whom the transfer is to be made.

While work is stopped, suspended, or interrupted, the use of the stills must be prevented by means of a seal.

The affixing and removal of the seals shall be noted in the appropriate protocol signed by the agent of finance and by the manufacturer.

ARTICLE 13.

High schools, practical schools, special agricultural schools, experimental stations, may at the discretion of the minister of agriculture and commerce and under the personal responsibility of the respective directors obtain permission to dispense with the application of seals to the apparatus owned by them during the duration of the courses of distillation which shall be set forth in the application.

Stills of the capacity of less than 20 liters owned by chemists and pharmacists and used exclusively for the preparation of nonalcoholic products are exempt from sealing.

CHAPTER IV.

Provisions must be made for factories in which the tax is collected on the quantity of actual product.

ARTICLE 14.

In factories where the tax is collected on the actual product, all the parts of the distilling apparatus shall be placed in a single room different from that containing the rectifying and transforming apparatus.

Both the rectifying and transforming apparatus shall be accessible to permit verification in all their parts. Both must rest on substantial supports not hollow, and the factory must be provided with all the necessary utensils (such as platform scales, etc.), to the end that the agent of finance may easily verify the contrivances for security and the seal affixed in all the parts, joint, and soldering of the said apparatus. The distilling apparatus must, furthermore, be in permanent, secure, and direct communication with the measurer.

The condensers, the wine heaters, and coolers, shall be provided with a sealed cover; and they shall, furthermore, be provided with a double wall or kept in boxes with sealed covers, whenever it is required by the financial administration.

For apparatus for distillation in vacuum, the administration shall take care to guarantee itself by means adapted to the nature of the special system.

ARTICLE 15.

The measurer shall rest on a base fixed in a stable manner.

Both the measurer and the filter, or the small basin interposed between the measurer itself and the distilling apparatus, shall be provided with seals, so that it shall not be possible either to move them from their place or to open them without taking off the seals.

In the beaker of the filter or of the basin there may be placed an alcoholometer and a thermometer furnished by the department of finance and officially controlled.

Up to a distance of 2 meters all around and below the base of the measurer and the annexed contrivances the administration may forbid the placing of basins, tubes, and subterranean conduits of any kind. In any case the basins, tubes, and conduits shall be readily accessible to the superintending agent.

ARTICLE 16.

Upon the demand of the department of finance and at the expense of the manufacturer, the tubes in which the vapors and alcoholic liquids

pass shall be provided with a double wall, colored in a special way, and provided with seals and contrivances of security in the joint soldering and stopcocks. These tubes shall be at least 5 centimeters from the walls themselves. In no case shall they pass through the roof of the room in which they are.

ARTICLE 17.

No communications of tubes or basins shall exist between the rectifying or transforming apparatus of the alcoholic liquid and those of first distillation, and both these shall pass through spaces entirely distinct.

The department of finance may provide the apparatus at its own expense with those special indicating instruments which it shall deem necessary for control, and ascertain the quality of the material used in the work by taking directly a sample thereof.

ARTICLE 18.

For factories and distilling apparatus which are established under the publication of the present regulation, the manufacturer is bound to construct and to arrange the coolers in such way that their base be distant from the pavement as much as the technical office shall deem necessary in order that the measurer may be applied and work regularly.

ARTICLE 19.

The application of the measurer is affected by the technical personnel of the department of finance and shall appear in a suitable protocol to be delivered to the manufacturer, who puts thereunto his signature.

In the protocol there shall be exactly indicated the distinctive character of the measurer applied, the number and quality of the seal, the point of the apparatus where they were affixed, as well as the alcoholic strength and the mean temperature in centigrade degrees of the low wines for every distilling apparatus.

The protocol shall be drawn up in duplicate, one copy of which shall be held by the manufacturer and the other remain in the hands of the technical office of finance.

CHAPTER V.

Provisions for factories taxed on the basis of the daily production.

ARTICLE 20.

The determination of the production and of the daily tax is made by the technical personnel of the department of finance, which shall note—

(*a*) The alcoholic strength and the quantity in weight of the raw material (wine hulls, fruit, and wine) which are introduced in every still at every operation, and the capacity and the form of each still.

(*b*) The duration of every operation in relation to the kind of the apparatus, the capacity of the boiler, the quality and quantity of the raw material, and the system of boiling—that is to say, whether by direct or indirect heating.

(*c*) Whether from the raw material there is extracted directly spirits, brandy, or low wine, and in case of wine hulls, whether any cream of tartar is produced or other by-product.

(*d*) Finally, any other element which is recognized as having a direct influence on the quantity of the product of distillation.

ARTICLE 21.

The determination of the daily production is reached with the following formula:

$$P = Q \times N \times R,$$

in which P represents the daily production expressed in liters of anhydrous alcohol; Q, the weight in quintals of the raw material used in every filling; N, the number of fillings for every twenty-four hours; R, the mean production in liters of anhydrous alcohol for every quintal of raw material used.

On the production thus determined, after deducting the lawful drawback, the daily tax shall be fixed

ARTICLE 22.

The production and the daily tax with the detailed statement of the data used in determining the same are notified by the technical office by means of one of its delegates to the manufacturer, to whom one of the originals of the protocol is sent. The other original, signed by the manufacturer himself and furnished with the date and completion of the notification when effected, is restored to the said office.

If the manufacturers will not or can not sign the act of notification, the delegates of finance shall indicate this fact in the act before putting thereon the date and signature.

In case of absence of the manufacturer, the delegates shall submit the act of notification to a member of the family or a dependent of that manufacturer, and in default thereof to the syndic.

ARTICLE 23.

In the revision of the production and of the daily tax, in the interest both of the administration and of the parties concerned, the technical personnel shall take note in the course of the operation of the factories of the effect of the existing limitation of product and determination of tax, and whether any departure shall take place.

When it is thought that a revision is required, the agent proceeds to make a new limitation of the production and determination of the daily tax.

The manufacturer who desires to obtain division of the production and the daily tax, in case of variation in the elements of the first determination, shall present an application thereof, with reasons, to the technical office of finance, indicating the tax which he would be disposed to accept, and the data on which he would like to have it determined.

The said office gives a receipt for the application, and thereupon notifies the manufacturer of the acceptance or the rejection of the offer, or notifies him within ten days of the tax proposed by the administration.

ARTICLE 24.

The new determination of the production and the daily tax is brought to the knowledge of the manufacturer in the manner set forth in article 22 of the present regulation.

ARTICLE 25.

When, at the instance of the administration, or on demand by the manufacturer, occasion has been given for revision, the new determina-

tion of the production and the daily tax becomes operative independently of the declaration or work that may have been going on, from the day after the one on which the notification of the new tax took place, if the revision was made upon the initiative of the administration, and on the day following the one on which the demand was presented, if the revision was made upon request of the manufacturer.

But when the revision takes place in the interest of finance, owing to variations in the conditions of work not manifested by the manufacturer, the effect of the new determination of the production and the daily tax shall begin to become operative from the moment when the fact is ascertained, without interfering with the penalties incurred.

ARTICLE 26.

The appeal to an expert judgment against the tax notified by the first determination or in consequence of revision shall be presented to the agency of imposts on a stamped paper costing 50 centesimi within the time fixed by article 14 of the single text of the law, and within the same time security shall be given for the expenses of the expert judgment. Such security may consist of a bond of a responsible person accepted by the agency of imposts or the deposit of a sum to be fixed by the same agency.

The appeal is transmitted by the agency of imposts to the prefect, who shall send a copy thereof to the technical office of finance.

ARTICLE 27.

The expert committee shall hold its meeting in a hall of the prefecture. The functions of secretary shall be confided to an employee of the same prefecture.

ARTICLE 28.

The appeal against the decision of the committee shall be presented on stamp paper costing 50 centesimi to the office of the secretary of the prefecture. The prefect shall transmit a copy thereof to the expert and send the original to the ministry of finance (general direction of excise), which shall pass it on to the central commission.

The report and the tables mentioned in article 22 of the single text of law joined by the technical office to the appeal when it is the office itself that makes the appeal shall be sent by it to the prefect as soon as a copy of the appeal of the opposite party has been made.

ARTICLE 29.

The verbal report of the experiment and of the meetings and deliberations, both of the expert committee and of the central commission, as well as the accounts of expenses, shall be written on free paper.

ARTICLE 30.

The expenses, both of the first and second judgments, shall be regulated on the basis of the third part of the royal decree of December 23, 1865, No. 2700, which approved the tariff for judiciary expenses in civil cases. For this purpose the report shall bear the indication of the hour when each meeting began and ended.

The distribution of the expenses of the procedure shall be made by

the ministry of finance and transmitted to the agency of imposts, which shall communicate it to the manufacturer.

If the security was given by means of bond or if the deposit was found to be insufficient, the agency of imposts shall provide for the collection, adopting the procedure established by law of August 26, 1868, No. 4548, and the respective regulations approved by royal decree of November 15, of the same year, No. 4708.

CHAPTER VI.

Security given by manufacturers.

ARTICLE 31.

The work in a factory can not be begun unless the manufacturer has proved to the technical office that he has given the security on the basis of the presumed amount of the tax for three months and two weeks, except the persons who conduct factories subject to a measurer and to permanent superintendence by the office of finance, shall pay the tax directly into the treasury provided for the deposits of receipts from spirits, and also give security for the production tax.

ARTICLE 32.

The security may be given by means of a deposit at the office of deposit and loan, in money or in government notes, or by means of the entry of mortgage to secure notes made to a person named. Both the notes payable to bearer and those payable to persons named are calculated on the basis of the latest quotations of the exchange of Rome.

Those conducting factories subject to the measurer and to permanent superintendence may also give security by means of first mortgage on the shop and other realty or by means of joint security of two responsible persons accepted exclusively by the superintendence of finance.

ARTICLE 33.

The value of staple goods shall be ascertained by the technical personnel of the department of finance by means of a summary estimate. If the manufacturer does not accept the result of the estimate, he may have it revised at his expense by an engineer, to be appointed by agreement between the superintendent and the manufacturer.

Land shall only be admitted to the extent of two-thirds of its value as estimated, and product and workshops for one-half. Product and workshops must be secured against fire to the amount for which they are accepted as security, and until freed from this obligation the person concerned is bound to keep up the insurance, renewing it at least one month before it expires and presenting to the superintendent the proof of the renewal with the evidence of payment of premium.

Bond shall not be given except for a solar year, and its cessation may be declared at any time by the superintendence of finance by a simple preliminary notice of eight days in the administrative form.

ARTICLE 34.

For the agricultural distilleries the giving of bond is accepted by the superintendence of finance when the tax is paid directly into the provincial treasury; on the other hand, it is accepted by the tax collector,

if the manufacturer prefers to pay the tax to him. In the course of the year when the tax collector is paid, the bond accepted by him ceases to be valid.

ARTICLE 35.

Besides the case provided for in article 28 of the single text of law concerning the deposit of spirit in a suitable magazine, it is permissible to relieve the manufacturer from giving bond, provided he obligates himself to pay in advance to the treasury the tax corresponding to the time comprised in the declaration of work, which, however, can never be less than six days, provided that the balance be drawn up at the nine monthly terms under article 52 of the present regulation.

ARTICLE 36.

The security given may be varied upon the request of the administration, whenever during the course of the work it is ascertained that it was not sufficient to cover the amount due to the department of finance. It may also be saved upon the request of the manufacturer, when it is found in excess of the conditions of work during a period of two months.

CHAPTER VII.

Declarations of work.

ARTICLE 37.

At least three days before beginning the work in a factory, it is necessary that a declaration be made thereof to the technical office of finance, written in duplicate, without crossing out or erasure. Such declaration may also be sent to said office by mail in registered package without paste.

One and the same declaration must not comprise any days of work except those of the same solar months.

An original of the declaration furnished with a visé of the technical office and with the seal must be restored to the manufacturer, who is obliged to keep it in the factory and present it to the agent of superintendence upon every request made by him.

The copy may also be sent back by the technical office through the mediation of the syndic of the community where the distillery is located.

The technical office promptly sends notice in regard to the superintendence to the agent delegated for that service.

On the day and at the hour indicated in the declaration the manufacturer has a right to begin the work even if the agent of superintendence has not yet arrived.

ARTICLE 38.

For factories provided with a measurer, in which the product is directly ascertained, the declaration shall indicate—

1. The residence and name of the manufacturer and the location of the factory.

2. The time, continuous or separated into various periods, of the work during the solar months in which the declaration is presented and in particular the day and hour when the work is to begin, the day and hour when the distillation of material will be completed, besides the indication as to whether the work of distillation will continue day and night or will be confined to the hours of the day.

3. The quality of the material to be distilled.

4. The distilling apparatus to be used, with the identification of the measurers annexed or the vessels referred to in article 50.

5. The conditions of work or the mean degree of strength and temperature of the low wine for every distilling apparatus. The degree of temperature must be that of the low wine within the filter or basin.

ARTICLE 39.

For factories taxed on the basis of the daily production of the stills, the declaration shall indicate besides the residence and name of the manufacturer and the location of the factory:

1. The time, whether continuous or of various periods, of the work, and in particular—

(*a*) The day and hour the filling of the still begins.

(*b*) The day and hour when the distillation will be completed.

2. The daily number of hours of work.

3. The quality of the material to be used.

4. The production and the daily tax already assigned to the apparatus to be used, as well as the distinctive number of said apparatus.

The various periods of work declared must begin and end without fractions of the day.

For movable stills the declaration shall furthermore specify the days of work in the various communities to which the apparatus is to be transported.

ARTICLE 40.

It is permitted to experiment in order to find out how new stills work and to take samples of the output of alcohol from the raw material, provided a written declaration be made thereof in duplicate, to the office of finance at least three days in advance and that guaranty be given for the tax.

ARTICLE 41.

The work being completed, the agent of superintendence withdraws the original of the declaration kept in the factory according to articles 37 and 40. The agent sends it at once to the technical office, together with the notice for the superintending service, provided with the adjustment prescribed, and accompanied also by the protocol regarding the application and removal of seal mentioned in article 13.

CHAPTER VIII.

Conditions of work in factories subject to measurer and to permanent superintendence.

ARTICLE 42.

In case of damage or of disturbance in the measurer or filter, or in case of damage, substitution, or sale in any part of the distilling apparatus, the manufacturer is bound to notify the technical office of finance thereof immediately, by means of registered package without paste, and the office shall thereupon at once proceed to the verification and the drawing up of the protocol.

The notice must be written in duplicate, one of which, provided with the certification of presentation, shall be restored to the manufacturer.

The same procedure is observed whenever for any other cause the work of the factory has to be interrupted for more than twenty-four hours in the course of the declared period.

ARTICLE 43.

The manufacturer shall keep in the factory a register, numbered and initialed by the technical office, in which, besides the indications of the declaration of work, with the day and hour of presentation, there shall be copied in the cases mentioned in the preceding article the time of sending the notification of damage and suspension of work.

In the same register there shall be reported at least every twenty four hours the numbers indicated by each measurer.

ARTICLE 44.

The service of verification and maintenance of the measurer and of any other device applied and verified by the department of finance, as well as the service of verification of the apparatus of the factory, shall be performed by agents delegated under the direction and responsibility of the technical office. The manufacturer shall arrange that the apparatus be stopped during the time necessary for carrying out the operation.

In case of damage, of repairs, and of cleansing to be undertaken in the distilling apparatus, the manufacturer notifies the delegated agent in writing and the agent must repair to the factory to take off or apply the suitable seal.

When, however, there is necessity for periodical or ordinary operations of cleansing the columns, the boilers, the condensers, etc., notice in writing must be given at least twenty-four hours in advance.

The repairs and cleansing having been accomplished, no apparatus can be reset and used unless previously verified and sealed anew by the delegated agent.

Any removal and application of seal devices and contrivances for security and safe-keeping must appear in a suitable protocol, one of the originals of which is placed in the hands of the manufacturer.

ARTICLE 45.

The technical office provides every factory with a memorandum register, in which the agents of finance must indicate the visits made, and the manufacturer must copy the notices sent to the delegated agent in accordance with the preceding article.

Furthermore, the manufacturer may write in that register observations which he thinks he should make in regard to the operations of the agent of finance.

ARTICLE 46.

At least once every two weeks an engineer from the department of finance shall verify the seals and the numbers indicated by the measurers, drawing up a protocol thereof, one of the originals of which he shall place in the hands of the manufacturer.

Furthermore, at least once every two months, and always in the case provided for in article 42, the engineer shall examine to see whether the measurer works regularly in every part, and if he deems it requisite shall subject it to experiment.

When it is necessary to empty the filter, the cup of the measurer, or the basin standing under it, the liquid gathered must be either made to pass through the measurer or be poured into the deposits of material to be distilled.

CHAPTER IX.

How the tax is to be ascertained and fixed.

ARTICLE 47.

The tax shall be ascertained and fixed at the end of every two months by the technical office of finance.

The terms of two months are intended to mean the end of the months of February, April, June, August, October, and December.

For factories which work under security the tax fixed at the end of every two months shall be apportioned for collection into four equal installments, which shall be due, the first, on the last day of the month following that in which the tax was fixed, and the others successively by two week periods.

ARTICLE 48.

For factories provided with a measurer, the fixing of the tax at the end of every two months shall be on the basis of the verification of every measurer, compiled by the technical office, which shall place in the hands of the manufacturer a copy thereof.

ARTICLE 49.

In case of injury or disturbance to the measurer or filter, the assessment of the tax for the apparatus to which the injury refers, starting from the last protocol on record or from that past time to which it is legally demonstrated that the injury dates back, is made in the following manner:

(*a*) If the injury is accidental and has been reported, the assessment of the tax is made by multiplying the number of days comprised within the above-named period by the mean daily tax of the preceding two months, taking account merely of the days of actual working of the apparatus. And if there is question of a new apparatus, the assessment of the tax is made in proportion to the daily work done by a similar apparatus.

(*b*) If the injury is accidental, but has not been reported, as also if the injury is malicious, or if the seal of the administration affixed to the instrument, the filter, the conducting tubes of the liquids, and alcoholic vapors, and to any other parts or organ of the distilling apparatus were broken, tapped, altered, or separated, or also if foreign bodies were fraudulently introduced in the measurer, the tax is assessed for the said period in proportion to the maximum work which the apparatus might have performed in the same time.

The maximum work is determined for every day by multiplying by twenty-four the maximum average of tax assessed in one hour resulting from two successive readings made at any time, even in one and the same day.

The tax shall also be assessed on the basis of the maximum work in case any alterations or modifications may have been made in the tubes conducting the liquids and alcoholic vapors, or in any parts of the producing apparatus which may have been intended to or have presented a possibility of diverting entirely all the parts of the products from the measuring instruments.

ARTICLE 50.

When the tax shall be assessed on the product directly ascertained by the agent of the administration, it shall be done on the product of the first distillation, measuring the quantity thereof in the receptacles or collecting vats, when these are present.

In that case such receptacles shall be perfectly closed with official seal and lid, and at the faucet, and in all the joints, and provided externally with indicators of level, the gradations of which are to correspond to the hectoliters and its multiple and submultiple; and the receptacles themselves can not be emptied without the presence of the agent of finance, and without having first compiled the protocol analogous to the preceding article 48.

In factories in which there are no collecting vats, the product shall be measured with those means and under those precautions that may be deemed best.

The protocol shall indicate the quantity of spirits and the degree of strength measured with the centigrade alcoholometer at the legal temperature.

The quantity shall be found from the indicators of level by means of direct measurement.

The above-mentioned verification shall serve as a basis to the technical office to assess the tax, which is done by multiplying the quantities in degrees found by the aggregate tax, deducting the percentage fixed by law.

ARTICLE 51.

For factories taxed on the basis of the daily production, the assessment of the tax shall be made at the end of every period of two months on the basis of the declarations of work, taking account of the modifications which may have been made therein according to the following article.

ARTICLE 52.

For factories mentioned in the preceding article, the revision of the declaration of work shall be admitted when the producer, owing to irresistible force or to unforeseen circumstances, has to suspend the work.

In these cases the facts must be reported to the agent delegated for superintendence, who shall at once give information thereof to the technical office.

The report may be made either directly or by registered letter without paste or by telegram.

In the protocol, which is to be drawn up by the superintending agent immediately after the report, he shall note the causes of the interruption or variation of the work as well as the affixing of the seal to the apparatus of the factory.

The relief from tax is granted the whole time during which the apparatus remains under seal, but if the sealing is retarded beyond twelve hours from the moment when the report is received, the relief shall begin at that moment.

ARTICLE 53.

Hence, in the case of material errors occurring in the assessment of the tax, the manufacturer may appeal to the superintendent of finance, who, if necessary, passes on the requisite alleviations or reimbursements.

The sums shall be deducted from the installments of tax immediately following, which the manufacturer has to pay whenever he does not *request reim*bursement by special order.

The sums due by the manufacturer which are for some cause or other not embraced in the installment to which the debt refers, are comprised in the next assessment following the discovery of the omission or error.

CHAPTER X.

ARTICLE 54.

Collection of tax.

For the collection of the tax assessed upon manufacturers who work under bond, the superintendents of finance send, on the 5th and 20th of every month, to the provincial receiver for every collecting office, and in duplicate, two distinct lists of the quota of tax which becomes effectively due during the whole of the preceding month and up to the 15th of the current month inclusive and due:

(*a*) By manufacturers who pay the tax on the basis of the product ascertained with the measurer and under permanent superintendence.

(*b*) By manufacturers who pay the tax on the daily product of the factory.

From the sum totals of the lists of collection there shall be deducted an amount corresponding to the tax on spirits that may have been exported abroad, introduced into deposits for exportations, sent to rectifying shops, to establishments for improving wine or for the preparation of cognac, and to the deposit of wholesale dealers.

For factories subjected to measurer and permanent superintendence, there shall be, furthermore, deducted the legal quota of tax corresponding to the spirits that may have been introduced into the storerooms of exempted industries.

The transmission of the list and of the recapitulation to the provincial receiver shall be made by a delegation of the superintendents, who at the moment of transmitting it give a receipt therefor, which the said receiver must send in immediately.

A memorandum of sum covered into the treasury, which shall indicate the date, number, and amount of the receipt for the payment made every two weeks, shall be transmitted by the receiver to the superintendents within the first two days of the following fortnight.

ARTICLE 55.

The quotas of tax due by the contributors, who may be obliged or authorized to pay them directly to the treasury, will be comprised in a special list, which the superintendents, on the 5th and 20th of every month, shall present by copy to every manufacturer by means of an agent of finance, sending two other copies to the provincial treasury.

A copy of the list signed by the treasury and countersigned by the controller will be returned to the superintendents.

From quotas of tax payable to the treasury, no premium of any sort shall be due to the treasurer, to the collector, or to the provincial receiver.

ARTICLE 56.

Whenever the manufacturers obliged or authorized to pay the quotas of tax directly into the treasury, do not within eight days of notification pay or shall pay only in part the tax due, the superintendents, upon information by the provincial treasurer or controller, shall without further proceedings collect the whole of the tax corresponding to the work performed to that time. The law of April 20, 1871, No. 192 (series 2\,

shall control for the collection of the entire tax due, including the fine of 4 per cent, and they shall order the suspension of the working of the factory by the methods and for the terms provided in articles 9 to 16 of the royal decree of the 4th of May, 1882, No. 740 (series 3).

ARTICLE 57.

The managers of factories which distill the material indicated under letter *a* of article 5 of the single text of the law shall pay the tax directly into the provincial treasury; for the other factories, subjected to the measurer and to permanent superintendence, the minister may order the direct payment into the treasury when they are not situated in a locality notably distant from the place of the province, when ready means of communication exists and when the expenses for the said payment are inconsiderable. In any case the minister may charge an accounting officer near the factory to collect the tax on account of the treasury.

For agricultural distilleries, the payment of the tax at the above-mentioned fortnightly terms shall be made at the revenue collector's office.

For the rest, all manufacturers have the right to request of the superintendents of finance the authorization to pay the tax directly into the treasury.

ARTICLE 58.

The managers, subject to measurers and to permanent superintendence, in order to obtain the prorogation of payments of the tax in cases of suspension of work, must address a request to that effect to the technical office of finance at least three days before suspending the work.

The technical office, having informed itself of the entire tax due the manufacturer up to the moment of cessation of work shall provide for the suspension of the notification of the installment of tax.

But in any case the installments of tax that have not been notified before the request is presented shall be paid when they become due.

ARTICLE 59.

When the factory resumes its work, the course of the notification will be resumed according to the normal term until completion, independent of the successive suspensions of work, dividing the whole tax due into six equal installments.

When successive suspensions of work take place in the factories before the postponed tax is completely paid, the notifications must be continued until that tax is paid, and in no case can the new postponements of payments relate to anything but the tax assessed since the last suspension of work.

ARTICLE 60.

When the manufacturer has reported that he wishes to pay the production tax in proportion to the withdrawal of spirits from the storeroom, no part of the spirits can be withdrawn from the storeroom itself without the corresponding tax having been first covered into the treasury, unless there is provision for shipping these spirits with permit for exportations into the storerooms of a wholesale dealer or a rectifying shop, or to a storeroom for the preparation of cognac.

The quantity of spirits to be withdrawn from the storeroom of the factory shall correspond to the tax paid, with the increase of the percentage of smaller rebate encountered at the act of withdrawal, on con-

ditions that the spirits be kept in the graduated receptacles. In the contrary case the quantity to be withdrawn shall not exceed that corresponding to the tax paid, without the drawback.

If the spirits are shipped abroad, or to the storeroom of a wholesale dealer, or to a rectifying shop, or to a storeroom for the preparation of cognac, the quantity to be withdrawn from the quantity in the factory shall correspond to that indicated in the permit.

ARTICLE 61.

The storeroom register of the factories shall contain two parts—one for the entry and the other for the clearance. In the entry there shall be inscribed the spirits which enter into the storeroom and in the clearance those that are withdrawn on the basis of the treasury receipts or of the permits or the balances for smaller consumption according to the following article.

The quantity of spirits for the respective entries shall be ascertained by direct measurement or by reducing the net weight into volume by the application of Table *a* annexed to the present regulation.

ARTICLE 62.

At the end of every two months an inventory shall be taken of the spirits existing in deposits.

Smaller rebates shall be considered to be made, under the terms of article 28 of the single text of the law, on the excess in quantity as compared with the assessment of the tax, provided they do not exceed the legal drawback. These excesses shall be deducted from the storage charge.

CHAPTER XI.

Rectification and transformation of spirits and employment of distilling apparatus for divers uses in the manufacture of spirits.

ARTICLE 63.

Before undertaking the rectification of spirits it is necessary to make a declaration thereof indicating—

1. The name and surname of the rectifier and the location of his shops.
2. The quantity and degree of strength of the spirits to be rectified.
3. The conditions under which the spirits to be rectified are in regard to the tax—that is to say, whether subject to production tax and tax of sales or simply to the tax of sale, or whether both taxes have already been paid.
4. The number of rooms of the compartment or of the receptacles from which the spirits to be rectified are to be withdrawn.
5. The apparatus which will be used for rectification.
6. The time of work, which will not exceed one solar month.
7. The number of the rooms, compartments, or of the vats in which the rectified spirits will be deposited.

ARTICLE 64.

The rectification of the spirits which exist in different conditions as regards the tax shall be performed in the fixed period on the basis of separate declarations, and rectified spirits shall be introduced in the corresponding compartments of vats.

ARTICLE 65.

In the factories taxed on the basis of the daily production, the rectification of the low wine, as a rule, must take place during the period of work declared, in different sets of apparatus, isolated from those intended for the distillation of raw material and having no communication with these by means of pumps, devices, tubings, etc.

Nevertheless, if the factory consists of a single moving apparatus, the low wine collected in several days shall be rectified during the hours of the day only, in the same apparatus that is intended for the distillation of the raw material on days not comprised within the period of work declared, provided mention is made thereof in the declaration of work, and provided that no other product already distilled shall be present in the workroom.

ARTICLE 66.

Whoever wishes to transform spirits for which the tax has been paid must make a declaration thereof indicating, besides his name and residence and the location of the factory—

1. The quantity and the degree of strength of the spirits to be transformed.
2. The origin of the spirits—that is to say, whether produced by the persons making the declaration or acquired from others.
3. The spirits to be used for the transformation.
4. The time continuous or divided into various periods for work, which shall not exceed one solar month.
5. The number of hours per day of work, which shall be limited to the hours of the day time.
6. The quality and the degree of strength of the new product to be obtained.

ARTICLE 67.

In order to employ distilling apparatus for the divers uses for manufacture, rectification, or transformation of spirits, it is requisite that a declaration thereof be made specifying the apparatus to be used, the quality of the raw material and of the product, as well as the number of hours per day, which shall be limited to the hours of the day and the period of work which shall be comprised in one solar month.

The presence of raw alcoholic or alcoholizable material in the rooms intended for the operation mentioned in the present article shall give rise to the application of article 72 of the single text of law.

ARTICLE 68.

When it is intended to use stills or parts of them solely for the extraction of cream of tartar, a declaration shall be made thereof indicating the apparatus that will be used at the time of work.

The administration shall have the right to apply such devices for security as it shall deem requisite to prevent the collection and condensing of alcoholic vapors.

The declaration mentioned in articles 63, 66, 67, and 68 shall be presented at least three days beforehand in duplicate to the technical office of finance, which, after having ascertained that it complies with the condition prescribed, shall return one of them furnished with the visé to the declarer, who is obliged to keep it in the factory and to exhibit it to the agent of finance whenever he demands it. At the same time the technical office sends notice for superintendence to the agent delegated for that service.

The work having been completed, the agent of superintendence withdraws the original of the declaration kept in the factory and sends it, together with the notice, to the technical office of finance.

During stoppage of work the apparatus shall be put out of use by means of seal.

TITLE II.

TAX ON SALE.

CHAPTER I.

General provision.

ARTICLE 70.

Both for factories and for rectifying shops it shall be obligatory that the spirits shall pass at once into the storage room, an exception being made for the agricultural factories in which the tax is ascertained on the basis of the daily production.

ARTICLE 71.

For every storage room or its compartment a special register of entry and clearance shall be kept under the care of the agent of finance.

ARTICLE 72.

Whoever wishes to open a wholesale or retail business in spirits or alcoholic beverages must one month beforehand make a written declaration thereof on simple paper to the syndic of the community.

The declaration shall be presented in duplicate; it must indicate the name and surname of the manager, the precise location of the place of business, and whether the sale will be wholesale or retail. In the declaration of the wholesale dealer there shall also be comprised the identification made by them of the room under the terms of article 54 of the single text of the law.

Whenever one wishes to carry on simultaneously a wholesale and retail business, it shall be requisite to make two distinct declarations and to have separate rooms.

Any deposits of spirits or alcoholic beverages for commerce, either public or private, subject or not subject to the consumption tax, shall be considered as a business under the terms of law.

Retail sale shall not be permitted in the spirit manufactories or in the rectifying shops.

ARTICLE 73.

The syndic having recognized the regularity of the declaration visés the two copies, one of which he shall return to the party making the declaration, while he shall present the other within three days with his remarks to the superintendence of finance.

The superintendence shall proceed to issue the license, observing the provisions of article 80 of the customs instructions, approved by royal decree of November 8, 1868, No. 4688, when there is question of a wholesale business under the conditions provided for in article 58 of the customs regulations.

Public and private depositors to whom the privilege has been granted by the administration of the consumption tax shall be relieved from the obligation of having a license.

ARTICLE 74.

The trade license shall be annual and must be renewed at the end of every solar year.

It shall only be valid for the trade or for the persons or firms to which referred, and shall be changed in accordance with the declaration to be presented in the way and under the forms established in article 72 whenever there occurs a change of the place of business or the transfer thereof to another person or firm.

Whoever wishes to continue the business for the next year, must, within the first two weeks of November of the current year, make a declaration thereof to the syndic of the commune, who proceeds conformably to article 73.

The license must be exhibited to the agent of finance upon every demand made by him.

ARTICLE 75.

When it is desired to stop the business of wholesale or retail sale, a written declaration thereof must be made to the syndic, and at the same time the license must be returned.

The syndic gives prompt notice thereof to the superintendence of finance, transmitting the license above mentioned.

ARTICLE 76.

The manufacturers of spirits subject to the obligation of storage, the rectifier, the owners of deposits assimilated to customs magazine or of trust deposit and the spirits and alcoholic beverages are obliged to keep the register of charge and discharge according to the blanks furnished them by the administration.

In the said register there shall be noted without erasures the daily movement of entrance and exit of the kinds of goods, with the indication, in case of entry, of their origin and of the person or firm shipping them, and, as regards exit, of their destination and of the person or firm through whom they are shipped. In both cases there shall be indicated the date, number, and kind of documents which justify the charge and the discharge.

For the deposit relating to the consumption tax the storage register kept by the factory agency shall serve, provided that at every item of entry there be added a reference to the certificate of payment or legitimation.

The register must be presented to the agent of finance at every demand on their part for such comparison as may be appropriate. At the end of every solar year or upon exhaustion it is closed in the presence of the said agent for the purpose of being filed with the respective documents in the technical office of finance.

In the new register the figures indicating the rental of various articles are carried over.

CHAPTER II.

Financial offices.

ARTICLE 77.

The financial offices for the collection of the tax on sale are:

(*a*) The customs.

(*b*) The storage-rooms patents.

(*c*) The revenue agencies.

The certificates of legitimation are issued by the same offices that are charged with issuing similar certificates for customs purposes.

In the manufactories or in the workshop, subject to permanent superintendence, the permit and the certificates of discharge mentioned in article 32 of the single text of law are issued by the agent delegated for said superintendence, who may also be authorized to issue certificate of payment for the discharge of deposits in money paid in suitable manner by the managers at the office of finance.

ARTICLE 78.

Financial offices for the collection of the tax are divided into principal and secondary.

The principal offices are:

(*a*) The principal customs offices.

(*b*) The storage rooms of patents in places where no principal customs offices exist.

The secondary offices are:

(*a*) Secondary customs offices.

(*b*) Revenue agencies in provinces where no principal customs offices or storage magazines exist, the accountability being intrusted to the revenue agencies.

CHAPTER III.

Methods of ascertaining and collecting the tax.

ARTICLE 79.

The tax on sale applies to spirits destined under any form for consumption within the States, and is commensurate to the quantity and the real alcoholic strength of the liquid, which is determined by alcoholometers officially controlled.

The quantity of spirits to be subjected to the tax on sale is that resulting from the storage register. On that quantity a drawback shall be allowed, whenever the occasion requires, amounting to the rebate of tolerance granted by the customs law for foreign spirits introduced into the magazines for rent or for private ownership, observing the provisions and the rules of the said law. On an ordinary or extraordinary occasion, whenever rebates exceeding those of tolerance is found, collection shall be made on the quantity lacking beyond the rebate of tolerance, with the procedure established by the law No. 1548, and the respective regulations of November 15 of the same year (No. 4708), which is not to interfere with an inquiry as regards contravention whenever the rebate exceeds that of tolerance by 2 per cent, in which case the tax will be collected on the whole quantity lacking, without any drawback for the rebate of tolerance.

For factories the quantity of spirits to be subjected to the tax on sale shall never be less than that subject to the tax on production. When the quantity of spirits to be subjected to the tax on sale is to be balanced with that on which the tax on manufacture rests the rebate on tolerance is not granted and the tax is collected for the difference between the quantities thus balanced and the deficiency resulting in the charge of the storage register under the procedure established by the said law of August 26, 1868, and the respective regulations, without, however, applying the fine.

ARTICLE 80.

The exemption of the tax on sale for spirits used for sweet wines and tipici wines is applied according to the provisions of article 50 of the single text of law, provided the spirits added do not in any case exceed 2 liters of anhydrous alcohol for every hectoliter of wine and that the alcoholic strength of the wine after the mixture shall not exceed the maximum limit of 15°.

ARTICLE 81.

Besides the cases provided for in the single text of the law no quantity of spirits can be withdrawn from the factory for the rectified work nor from the assimilated storeroom without a verbal declaration being previously made thereof to the office of finance and the payment of the tax and making the verification.

In proof of the payment of the tax the office issues to the party concerned the respective receipts.

ARTICLE 82.

The person delegated for superintendence upon demand of the person interested shall ascertain whether the quantity and the degree of strength of the spirits to be withdrawn corresponds to the ticket, and he shall add to the same the attestation of withdrawal from the place of custody, and the following information:

(*a*) Name, surname, and residence of the person to receive the goods.

(*b*) Nature and location of the business for which the goods are intended.

(*c*) Route by which the goods may arrive at their destination.

(*d*) The authority by whom the ticket must be inspected during the transit when it is made by the ordinary route.

(*e*) Quality and number of the counter signatures that may be added.

ARTICLE 83.

For spirits intended for industrial uses under the provisions of article 34 of the single text of law the tax on sale may be paid on introduction into the magazine annexed to the factories.

In such case security must be given not only for the part of the production tax to be paid, but also for the tax on sale.

In the certificate of the charge there shall be cited the name, date, and contents of the ticket issued for the payment of the tax on sale.

ARTICLE 84.

The rebate mentioned in article 51 of the single text of law shall be granted on completion of the inventory, to be made at the end of every two months, of the spirit present in storage, and a corresponding quantity is liberated on request of the manufacturer by issuing a ticket of

legitimation, which shall serve also for the transportation of spirits to the rectifying establishment, provided that establishment shall satisfy the conditions required by article 4 of the present regulation as regards storage rooms.

ARTICLE 85.

For factories not found to deposit the spirits in a suitable magazine, the rebate is granted on the occasion of the issue of the ticket of payment or permit.

CHAPTER IV.

Provisions regarding the movements and the deposits of the spirits within the boundaries of those districts.

ARTICLE 86.

A decree of the minister of finance designates the commune admitted to enjoy the franchises established by article 63 of the single text of law for spirits and alcoholic beverages which circulate or are deposited within the customs limit of those communes.

Manufactories, rectifying establishments, and customs deposits or those of similar character are excluded from the above-mentioned franchises.

ARTICLE 87.

The closed communities which are privileged as regards the collection of the consumption tax, and which intend to enjoy the immunities granted by the said article 63 of the single text of law, must send to the ministry of finance the record of deliberation of the communal council, in which a declaration shall be made, on the part of the commune, that they will provide, gratuitously, for the requirements of the service by the proper officials and agents under the surveillance and the inspection of the financial administration.

The ministry shall have authority to withdraw the franchises from those communes which do not regularly satisfy the obligations assumed.

The commune which intends to renounce the franchise must give notice thereof to the ministry one month in advance.

ARTICLE 88.

For the closed communities, in which the collection of the consumption tax is made directly by the State, the application of the above-mentioned article 63 shall take place in the time and by the method fixed by the Government administration.

ARTICLE 89.

The officials placed along the customs line shall act as secondary officials in regard to the principal financial office for the inspection of the movement of entry and exit from the commune, of the spirits and alcoholic beverages and of the effective documents of record.

ARTICLE 90.

The duties of the customs officials in closed communities in regard to the movement of entry consist:

1. Of demanding on the entry in commune of spirits or alcoholic beverages in quantities exceeding 4 liters the tickets which indicate the

origin thereof—that is to say, either the ticket of payment of the tax on sale for the goods sent from the factories from the rectifying shops, or from the customs-houses to their destination, or to the consumption tax deposit; the permit for the goods sent to the rectifying shops from the customs deposits or those assimilated to them; the ticket of legitimation for goods which pass wholesale magazines to retail shops or to private consumers, or to deposits for the consumption tax, or which are intended for exportation.

2. In assessing the day and hour of presentation on all the tickets mentioned in the preceding number and in retiring those tickets of payment or legitimation that cover goods which remain for consumption within the customs limit.

3. Sequestrating spirits and alcoholic beverages not provided with an address or escorted by a ticket of antiquated date or not corresponding with the state of the goods or their destination, in order to hand them over to the tax office drawing up the protocol of contravention.

4. In ascertaining whether the ticket relating to goods that have arrived by railway shows the special stamp of the station of departure and the station of arrival, and that the ticket for goods that have arrived by ordinary route that the visés of the officials or authorities is stated on the ticket.

5. Finally, in reporting to the office of finance all irregularities or omissions found in the examinations in the various kinds of addresses.

ARTICLE 91.

Regarding the movement of exit the tax agents are obliged:

1. To sequestrate spirits and alcoholic beverages that exceed in quantity the 4 liters sent from within the commune without the prescribed ticket, and to draw up the respective protocol of contravention against the respective law.

2. To visé, indicating the hour and day of passage, the tickets issued by the financial officers stationed within the commune after having recognized their regularity and ascertained the identity of the goods with those described by the tickets themselves.

ARTICLE 92.

The ticket withdrawn by the tax agent on the introduction of the spirits and beverages intended for consumption in the commune shall be kept in the tax office at the disposal of the Government agent.

TITLE III.

COMMON PROVISIONS.

CHAPTER I.

Importation.

ARTICLE 93.

By the effect of the customs duty of the additional tax on manufacture and of the tax on sale, the quantity in hectoliters of pure spirits, coming from abroad in casks and kegs, is deducted from the net weight, reducing the weight to volume by means of Table *a*, annexed to the present regulation.

The net weight shall be determined by deducting for the recep the legal dead weight according to Table *b*, annexed to these same lations.

Both the importer and the administration, however, shall be f require the application of the real dead weight, in which case the c tion of emptying and filling of the receptacles must be made und care and at the expense of the importer.

ARTICLE 94.

The term alcoholic beverages comprises all those which the l the customs tariff includes under the head of sweetened or aro spirits.

As liquor, wines are construed as beverages in casks, in bottles, other receptacles which are considered wine by the customs tariff they have an alcoholic strength greater than 15° of the centi alcoholometer.

The tax on sale for spirits in wine shall be measured on the alc strength above 15°, at the temperature of plus 15.56, with the criteria as in the customs tariff.

The product with a base of spirits and subject to the payment o tax on sale for the spirits which they contain, and that used in manufacture, shall be all those for which the customs tariff im payment of the additional tax on manufacture besides the cu duty; that is to say, ether, chloroform, iodoform, spirituous ess alcoholic perfumeries, spirit varnishes, etc.

The measure of the tax on sale to be collected on the frontier o said product is established by the following table:

No. of tariff.	Product subject to additional tax.	Amount of tax on sale.	Units of measure on which the tax on sale i
	Ether and chloroform	.....	For every kilogram of ether and chlorofor out deducting the weight of the immediat tacles.
	Spirituous essences of rum, cognac, and other liquors containing spirits.	.....	For every kilogram, without deducting the of the immediate receptacles.
	Alcoholic perfumeries	.....	For every hundredweight, without deduct weight of the immediate receptacles.
	Spirit varnishes	.....	For every hundredweight of legal net wei

ARTICLE 95.

The tax on sale shall also apply to the fruits, vegetables, and g in the spirits for the quantity and real strength of the spirits in they are found, and the same is true of chemical products of med goods, as well as of simple and compound medicaments, in proport the quantity and strength of spirits determined by the superior co of health under the terms of article 3 of the single text of laws.

ARTICLE 96.

The payment of the tax on sale shall result whether from the t of entry or from the ticket detached from the ticket sheet issued the present regulation.

The customs office shall always ask the importer whether he d the issue of the special ticket for the payment of the tax on sale. there is presented at the discharge from the customs office a p goods which is to be distributed to different consignees there shall

objection to issuing a single ticket of entry for customs duty, and as many special tickets as there are consignees for the tax on sale, provided that on these tickets all the items of the entry tickets are noted.

When the entry ticket is issued both for the payment of the customs dues and for the payment of the tax on sale the customs office shall note on its register of collection, in the proper column of the dues on importations and of the additional tax of customs, the sums collected under those headings, and open a suitable column to register therein the tax on sale.

When the special ticket is issued for the tax on sale the total entry resulting from the ticket sheet shall be delivered at the end of every month to the collecting register.

On the entry ticket there shall be noted the special indications mentioned in article 82, when it serves also to legalize the payment of the tax on sale.

ARTICLE 98.

In case of failure to discharge the permit issued for the transportation of goods subject to tax on sale from one customs office to another or for transit, steps shall be taken not only to recover duties and the additional tax, but also the tax on sale incumbent on the quantity not presented at the customs office on which the ticket was issued.

The same procedure shall be followed for deficiencies found in the customs deposit of the kind.

ARTICLE 99.

On the declarations for entry and introduction into deposit or for permit there must always be indicated the actual alcoholic strength of the wines, in whatever receptacle they may be found.

If the wines have an actual strength not greater than 15° it suffices that on the declaration it be stated that they do not exceed that limit.

CHAPTER II.

Exportation.

ARTICLE 100.

The exportations abroad of spirits in the natural state added to wines or mixed liquors and cognac shall take place only through customs offices of the first order, and those of second order of first class.

ARTICLE 101.

The restitution of the production tax on spirits sent abroad in their natural state shall be granted for spirits produced at home, not for spirits imported from abroad.

The residues for production or rectification shall not be admitted to restitution.

In order to obtain such restitution it shall be necessary to present an application therefor to the superintendent of finance, adding the customs ticket provided with the attestation of issue and, as the case may require, with the visé at the end or the visé of the foreign customs office, as well as the ticket proving the payment of the production tax. Both the tickets of issue and those of payment of the tax must be in the name of the manufacturer who requests the reimbursement. Indorsements of tickets of payments shall not be admitted; the tickets of issue

must be indorsed in favor of the exporter when they are made out in the name of the railway or the express office. Furthermore, the tickets of payment shall not be valid for the purposes of restitution when one year has expired since their date up to the moment when the exportation takes place.

ARTICLE 102.

To make the exportations, the provisions of the customs regulations shall be observed in regard to goods admitted to restitution of duty.

In the tickets of issue there shall be accurately indicated the result of the verification, writing in figures and letters the quantity and apparent alcoholic degrees of the liquid.

ARTICLE 103.

To the exportation of that liquor the provisions contained in the first paragraph of the preceding article are extended.

When there is a question in regard to wine improved without the presence of the agent of the administration, the exporter shall indicate in the declaration not only the quantity but also the alcoholic degree of the wine to be exported. The customs office of issue shall write in figures and in letters the quantity of the liquid that appears from the verification. Furthermore, the customs office shall take two samples, of a liter each in case of wines, or one-fourth of a liter each in the case of liquors, which sample shall be sealed, at the expense of the exporter, with the distinctive seals of the customs office itself and of the person interested and transmitted to the technical office of finance of the province where the factory or deposit exists for the verification of the alcoholic strength, unless the customs office has been authorized to undertake such verification, the result of which in every case must appear on the ticket of issue.

In case the administration or the exporter disputes the result of the verification the second sample must be sent to the ministry, which will provide for a new verification, to be made with the most perfect apparatus and officially controlled by a scientific institution. The result of the said verification shall be definitive. Notice of the day and hour in which the new verification takes place will be given to the person interested, who may be present or cause himself to be represented.

The manufacturing exporter, however, shall have the privilege of requesting the technical office of finance, at least forty-eight hours beforehand, that the verification of the alcoholic strength of the wine or liquors to be exported be made in the workshops or in the storage rooms, under the regulations of article 105 of the present regulation, in which case the expenses for the indemnity to the official personnel shall be at the charge of the exporter.

ARTICLE 104.

For the restitution of the tax on spirits added to must, and in the case provided for in the second paragraph of article 64 of the single text of the law, whenever it is desired to obtain wholly the same restitution for spirits mixed with the wines, it shall be necessary (1) that the exporter declare, at least fifteen days beforehand, to the technical office of finance where their factory or deposit is located; (2) that the verification to be made under the care of the technical office shows that the room presents all the conditions prescribed by the customs regulation for deposits in private magazines, or, if it does not present these conditions, that all the

preparations shall be made which the said office shall deem necessary; (3) that the operations of mixture, which the spirits after previous declaration presented at least forty-eight hours before to the technical office, shall be made under the surveillance of the technical personnel in the presence of the financial agent, who shall make a record of it by means of protocol.

For every shipment abroad the intervention of the same agent is necessary, who, besides verifying the quantity and quality of the liquid to be exported, shall issue permit and apply the seal to the receptacles.

The customs office to which the declaration of exit is to be presented, having ascertained the integrity of the seal and verified the identity and quantity of the liquid, proceeds to the further attestation.

ARTICLE 105.

The verification of the real alcoholic strength of the improved wine, in the cases indicated in article 103 of the present regulation, is made by means of distillation, using special apparatus furnished by the administration, and officially controlled.

Whenever the spirits has been added to the wine in the presence of the agent of the administration, or when there is question of spirits added to must, the alcoholic strength is ascertained from the protocol mentioned in article 104.

ARTICLE 106.

To obtain the restitution of the production tax, the tax on sale of spirits added to wine, to liquors, and to exported must, the exporter presents a demand to the superintendent of finance, adding the documents mentioned in articles 103 and 104, provided with the prescribed attestation.

If there is question of the improvement without the presence of the Government agent, the determination of the quantity of alcohol added is made with the formula:

$$G = \frac{100}{100 - A}\left(A - a\right),$$

in which A represents the alcoholic degree of the improved wine and a the alcoholic degree of the natural wine.

Substituting in the formula the values of A and a, the result G represents the quantity in degrees of alcohol added in 1 hectoliter on which the restitution is due.

If there is a question in regard to liquors or must or wines improved in the presence of the agent of the administration, the restitution is for the quantity of spirits resulting from the verification.

ARTICLE 107.

The restitution of the tax on production is due in the ratio of 90 per cent for alcohol exported in the natural state for liquors for must and for wines improved without the presence of the agent of the administration, and of the entire tax for wines improved in the presence of the said agent.

The tax on sale is restored entire, but for wines improved without the presence of the delegates of finance the refund is commensurate to the alcoholic strength above 15°, according to article 94 of the present regulations.

ARTICLE 108.

The managers of factories not bound to deposit the spirits in suitable storeroom, and wishing to obtain the drawback on the tax by means of production from the quantities in the factory ascertained for the spirits exported abroad, either in nature or added to wines or must, must present to the technical office of finance, at least forty-eight hours before drawing the spirits from the factory, a written declaration, in which there shall be indicated the quantity in hectoliters and the degree of the spirits exported, the quality and the number of the receptacles in which they are contained, and the customs office through which they are to pass out.

ARTICLE 109.

The technical personnel of finance shall proceed within the factory to the verification of the spirits to be exported, and draw up a protocol thereof in duplicate, consigning one to the manufacturer, and placing seals on the receptacles.

For the spirits to be exported a permit shall be issued, which shall be presented at the customs office of exit if there is a question in regard to exporting spirits later, and to the agent charged with being present at the mixture in magazines of private ownership intended for this purpose when there is a question in regard to spirits to be mixed with wines or must.

For the operations of mixture and those of withdrawal from the magazines and the operations of shipment of wines improved at the customs office of exit the provisions of article 104 of the present regulations shall be observed.

ARTICLE 110.

For spirits that are to be extracted from the storerooms of the factories, from those of the rectifying shops, and from the customs deposit assimilated thereto, and which are to be shipped abroad in the nature of or added to wines or must, there shall be presented at least forty-eight hours in advance a declaration to the technical office of finance indicating the quantity and degree of strength of the spirits, the number of the storage room of the compartment from which it will be taken, the quality and the number of the receptacles in which it will be introduced, and the customs office through which it is to go out.

In other respects the provisions of the preceding article shall be observed.

Whenever the storage room is situated outside of the chief place of the province, in a locality which is the seat of the customs office, the declaration may be made to the customs office, which shall proceed to the operation as the representative of the technical office. No indemnity is due to the employees of the customs office.

ARTICLE 111.

For the exportation of spirits, such as cognac, which are in special storerooms or in trust deposits, according to article 30 of the single text of law, the provisions of the preceding article shall apply.

The technical personnel of finance shall proceed within the storeroom or the deposit to the verification of the cognac to be exported, affix seals to the receptacles, and draw up a protocol of the whole operation in the manner indicated in article 109, issuing a permit, which shall be presented to the customs office of exit.

ARTICLE 112.

The exportation having been accomplished, the person interested shall present to the technical office the demand, accompanied by the ticket of exit with the attestation prescribed as well as the protocol of verification, and in the case of improved wine or must he shall add thereto also the protocol of the agent who has been present at the mixture.

If no special cases arise the technical office shall proceed in the following manner:

(*a*) If the spirits are withdrawn from a factory not bound to deposit the same in a suitable magazine the drawback on the tax shall be paid by means of a deduction from the quantities ascertained in the manner indicated in article 107.

(*b*) If there is question of spirits withdrawn from the storage room of the factories, from those of rectifying shops, or from assimilated customs deposits, or if there is question of cognac, the quantity exported shall be canceled from the register.

ARTICLE 113.

When it is desired to ship abroad spirits deposited in the special storage room of the customs office for exportation a declaration shall be made thereof to the customs office which, on the basis of the ticket of exit, shall cancel from the storage register the quantity exported.

ARTICLE 114.

In cases of exportation of improved wines, provided the mixture is effected in the precinct of the customs office twenty-four hours before exportation, the drawback of the entire tax may be granted, or the canceling of the register for the alcohol added in the presence of the customs agent.

The authority to allow the mixture, on regular demand of the exporter, to be effected in the precinct of the customs office shall be reserved to customs offices of first order and to those of second order of the first class.

For the factory or the storeroom, the rules prescribed by articles 108, 109, and 110 shall be observed. The permit shall be presented to the customs office at which the mixture of the spirits with the wine is to take place. At this operation employees of the customs agents must be continuously present, under the control of the respective superiors.

The results of the operation shall be drawn up in a protocol, with the signatures of all the persons present. In the protocol there shall be indicated the quantity and quality of the improved wine and the quantity and degrees of strength of the spirits used. This protocol shall be presented by the exporter, together with the ticket of exit, at the same time as the demand for obtaining the relief of the entire tax, which thereupon shall be effected in the method established in article 112.

CHAPTER III.

Passage of spirits between factories, deposits, wholesale establishments, and rectifying shops.

ARTICLE 115.

The origin of the spirits and alcoholic beverages which are transported in quantities over 4 liters shall be proved by means of the ticket of payment, or the permit, or the ticket of legitimation.

ARTICLE 116.

The passage of the spirits from the factories to the annexed place of deposits in the case provided for in the first paragraph of article 29 of the single text of law shall take place by means of the issue of the ticket of accompaniment and the escort of an agent of finance.

ARTICLE 117.

The ticket of legitimation must be issued on the basis of the ticket of payment, except the case provided for in article 84, and it must contain the indications specified in article 82.

For pure spirits the ticket of legitimation must always be issued by the financial office.

For alcoholic beverages it may be issued by the wholesale dealers authorized by the superintendent of finance, on ticket sheets furnished for that purpose by the administration.

This privilege may be revoked by the administration whenever it is deemed advisable for the better working of the service; the revocation shall always be in order if the ticket sheet is sent irregularly and if the written tickets do not contain all the prescribed indications.

ARTICLE 118.

The discharge from the permit shall be effected-

1. For spirits which pass from the factories to the rectifying shops, to the deposit for exportation or for the preparation of cognac, or to the storage rooms of wholesale dealers, by citing the date and the number of the parts inscribed in the register of charge and discharge of the magazines.

2. For spirits intended to raise the alcoholic strength of wines up to the degree at which they are to be kept, it shall be done by attesting the actual employment for such purpose and adding an analogous protocol of the presence of the agent of finance.

3. For spirits intended for industrial purposes, it shall be done by citing the date, number, and amount of the tickets issued for the payment of the tax on sale, as well as the number of the items described in storage register.

ARTICLE 119.

The shipper shall present the ticket on every demand by the agent of finance during the transit for the necessary inspection.

He may also be required by the financial authority to present the ticket itself both during transportation and upon arrival at its destination for new inspection and visé.

ARTICLE 120.

On the demand of the commandant of a regiment the superintendent shall issue to the military sutler an official document on filing, costing one lire, which shall have the qualities requisite for a ticket of legitimation—that is to say, the indications, the name and surname of the sutler or purveyor, and the quality and quantity of the beverages. This document shall serve merely to legitimate the transportation of the goods to all the places where the regiment passes or stops, and shall be valid for the solar year in which it is issued.

In no case can the sutler or purveyor sell to private persons the beverages which he carries with him; but he must furnish them solely to the regiment on the march and in camp.

CHAPTER IV.

Rectifying shops, magazines of wholesale dealers, customs deposits for spirits intended for exportation, magazines or trust deposits for the preparation of liquors, such as cognac. and magazines for the alcoholization of weak wine.

ARTICLE 121.

Wholesale dealers who intend to set up a magazine assimilated to customs deposit for the deposit of spirits, and manufacturers of liquors, such as cognac, who wish to prepare and keep in similar magazines or in trust deposits the spirits of the factories which make wine shall, at least fifteen days beforehand, make a written declaration thereof to the technical office of finance, indicating the commune, the road, and the number of the establishments.

The technical office shall proceed with the verification of the said magazines and trust deposits to which shall be applicable the customs regulations; for example, as regards the condition of the rooms, the obligation to furnish security, the keeping of a register, and the ordinary and extraordinary verification.

ARTICLE 122.

Managers of factories where wine is distilled, who desire to introduce spirits into magazines or into trust deposits for the preparation of cognac, must, at least fifteen days before beginning the work, declare to the technical office that the spirits will be introduced into the said magazines for deposit.

The technical office shall provide for the exercise of a special surveillance for the purpose of making sure that no material is used other than wine, and that the spirits are kept in a storage room or separate compartment.

Whenever there is question of a factory not subject to the obligation of having a storeroom the spirits shall be kept in receptacles previously identified and sealed.

ARTICLE 123.

In the register of the rectifying shops, and in those of wholesale dealers, the spirits derived from the factories shall be inscribed for the quantity actually verified on arrival.

Whenever deficiencies are found, as compared to the quantity or degree apparent in the permit, the production tax and the tax on sale will be collected on the deficiency.

ARTICLE 124.

The exit of the spirits from the rectifying shops, from the magazines of wholesale dealers, and the exit of the products from the magazines or from the trust deposits for the preparation of liquors such as cognac shall not take place without the presentation of the receipts for payment of the production tax and the tax on sale to which they have been subject or of the permit.

ARTICLE 125.

For rectifying shops and for the magazines of wholesale dealers the quantity of spirits to be subjected to the production tax and the tax on sale shall be that resulting from the charge of the register of deposit without any drawback for the production tax or any rebate for the tax on sale

mentioned in articles 5, 11, 51, and 86 of the single text of law. Only for the purpose of the tax on sale there shall be granted on the quantity apparent in the register the rebate of tolerance in conformity with article 79 of the present regulation.

Also for spirits introduced in the magazines or trust deposits, for the preparation of cognac, the production tax and tax on sale shall be due on the quantity apparent from the charge of the register, and no drawback or rebate of any kind shall be granted except only the rebate mentioned in article 30 of the single text of law.

ARTICLE 126.

The establishment of customs deposit of spirits mixed with wine shall be granted under the observance of the following conditions:

(*a*) The deposit of improved wine shall be entirely distinct from that of pure spirits.

(*b*) The mixtures must be made under the superintendence of the financial agent on the day in which the introduction of wine into deposit takes place.

(*c*) For every compartment of the same deposit only a single type of mixture with constant title may be made.

ARTICLE 127.

To obtain the concession of alcoholizing wine and fermented must with the reduction of the production tax it shall be necessary to make a demand of the technical office of finance and to make payment to the treasury or to other offices delegated for this purpose of the reduced tax for the quantity of spirits used.

The office shall send an agent to be present at the alcoholization of the wine; and whenever a transfer of the spirits is to take place it must be made for the amount of the tax drawn back under permit, which shall be marked discharged by the agent delegated for superintendence as soon as the alcoholization of the wine has taken place.

CHAPTER V.

Superintendence.

ARTICLE 128.

The service of superintendence and inspection shall be confided to the technical office of finance, to be exercised by means of the engineers and subordinate personnel as well as by means of the watch of finance, who, for the execution of the service itself, depend on the said office and receive instructions from it.

In a subsidiary way the service of superintendence shall be performed by the concurrence of the royal carabinier, the guard of public security, and the agent of the commune.

ARTICLE 129.

The following shall be subject to superintendence:

(*a*) The manufactories of spirits, the rectifying shops, the establishments for rectification and transformation, the room where distilling apparatus is kept or where distilling operations exempt from tax are performed, or for the preparation of cream of tartar, the manufactories of vinegar and œnolin, as well as the rooms annexed thereto.

(*b*) Assimilated deposits and trust deposits.

(*c*) Deposits both public and private which are subject to the duty of the consumption tax in closed communities.

(*d*) Wholesale and retail establishments for spirits and alcoholic beverages.

(*e*) Establishments for improving wines and for the preparation of cognac.

ARTICLE 130.

Agents of superintendence shall have free access to the factories, to the establishments, shops, deposits, and business places above stated for making there the suitable inspection.

To the said agent there shall be exhibited upon request all the registers and documents prescribed.

Whenever any doubt arises regarding the agreement between the result and the registers of charge and discharge and the whereabouts of the goods, the goods themselves shall be inspected and a protocol thereof drawn up.

Managers shall on every occasion supply the agents of superintendence with all the information which they demand, and lend them their aid and that of the subordinate personnel in order to facilitate the operations of inspection.

ARTICLE 131.

In factories subject to permanent superintendence the entrance shall always remain open and free to the agents of finance both day and night.

The number of the doors for entering shall be limited to that strictly necessary for the work of the establishment.

Furthermore, the windows looking outward shall be provided with iron grating.

The manufacturers shall place at the disposal of the employees of finance a room with office furniture, and when requisite in large distilleries, another room for the personnel delegated for permanent superintendence. As regards small distilleries, a mere inclosure in the shop with the necessary furniture may suffice.

ARTICLE 132.

Whatever be the system of ascertaining the tax in the factories subject to permanent superintendence, the office of finance is hereby authorized to keep a special register in order to note therein the movement of entrance and exit of the raw material and product.

Whenever the technical office deems it requisite it may proceed, with the cooperation of the manufacturer, to take a real inventory of the alcoholic material, and whenever it deems it necessary to also do the same with the alcoholizable substances present in the factory, ascertaining by experiment, if necessary, the strength of the mixtures, and shall draw up the suitable protocol.

ARTICLE 133.

The expenses of superintendence mentioned in articles 29, 80, and 85 of the single text of law relates to the indemnity for traveling expenses and expenses of sojourn due to the delegates of the administration on the basis of the special regulations and ministerial decrees in force.

ARTICLE 134.

The amount of such expenses shall be determined beforehand from month to month by the technical office and deposited by the parties concerned in the treasury of the accounting office, the balance being made at the end of three months.

CHAPTER VI.

Crimes, contraventions, and penalties.

ARTICLE 135.

Whoever alters or falsifies the measurer or other devices and instruments applied or verified by the agent of finance, the seals or stamped coins, printed in any way and on any material whatever, or the mark of verification or any other impression or countersign, and who knowingly makes use thereof shall be punished with imprisonment of from three to five years.

Whoever deliberately removes, injures, or breaks the measurers or other devices and instruments, applied or verified, changes their indication, breaks or removes seals or stamps, printed in any way or on any material whatever, or the mark of verification or other impression or countersign, and whoever tries to prevent the measurer from regularly and fully performing its function, shall be punished with imprisonment ment of from one to three years.

Whoever retains without authorization devices, seals, stamps, and punches, either false or identical with those used by the administration, shall be punished with imprisonment of from one to six months.

Whenever one of the crimes indicated in this article occurs the manufacturer who, without having participated therein, has become guilty of negligence in the keeping of the mechanical measurers and other instruments or devices applied or verified by the agents of finance or of the stamp or seal affixed shall be punished with imprisonment not to exceed three months.

In all these cases besides the penalties above stated the fines and other penalties established by the following article shall be applied.

ARTICLE 136.

The manufacturer who does not immediately notify the agent of finance of injuries or alterations that have occurred in the measuring device applied by the administration shall be guilty of contravention and subject to a fine of 50 to 500 lire.

ARTICLE 137.

A fine not less than twice the tax nor greater than ten times the tax, in case of the tax on production, and not less than twice nor over six times the tax, in case of the tax on sale, and without release from greater penalties inflicted by other unitive laws, and by article 135 of the present regulation, shall be imposed on anyone who having presented the report of the factory and after verification—

1. Shall undertake any operation relating to the manufacture of alcohol before the time indicated in the declaration of work or continue the work beyond the time indicated in the same declaration.

2. Shall continue the manufacture during the continuance of the suspension of business in case of failure to pay the tax due.

3. Who introduces alcoholic material (grape hulls, wine, or other material) in the apparatus for rectification or transformation or uses the stills for distillation during the time declared for rectification of low wines.
4. Who tries to evade in any way the payment of the tax due.

ARTICLE 138.

The contravention provided for in numbers 1 and 2 of the preceding article is committed when—
1. Alcoholic material of any sort is prepared or its preparation has been started in any vessel or apparatus.
2. Alcohol is extracted in any way or its extraction has been commenced.

ARTICLE 139.

In all cases indicated in article 137 and independently of the application of article 72 of the single text of law the fines shall be established on the base of the tax on production and on sale corresponding:
(*a*) To the quantity and degree of strength of the alcohol or the alcoholic product found or collected in the receptacle, or diverted into any apparatus, vessels, or other receptacles.
(*b*) To the quantity and alcoholic strength of the raw material found in the vessels serving for preparation, or in the distilling, rectifying, or transforming apparatus.

ARTICLE 140.

Whenever in a distillery of an agricultural character material is used different from wines, from grape hulls, fruits, or wines, or if grape hulls, fruits, or wines are used which have not been exclusively produced on the property belonging to the manufacturer or cultivated by him, and whenever the distillation is carried on in a place different from the property which has produced the grape hulls, fruits, or wines, a fine shall be applied at the ratio of from twice to ten times the largest tax which would have been assessed on the actual product for the work performed during the entire distilling season, if the distillery has not been recorded as agricultural.
The same fine, keeping account also of the difference in the measure of the drawback, shall be applied at the charge of cooperative distilleries in case they use material different from that indicated under letters *b* and *c* of article 5 of the single text of law, or who use material not derived from the property of those who have united in a cooperative association or been cultivated by them. In all cases in which it is not possible to apply the fines referred to in the present article, the fines varying from 5 to 150 lire established in article 144 shall be applied.

ARTICLE 141.

The illicit production or distillation of spirits mentioned under articles 70 and 71 of the single text of law shall be understood to mean that which is begun or carried on before the report is presented and before the factory has been verified.

ARTICLE 142.

In case of failure to mark "discharged" on the permit of deficiencies other than the rebate of tolerance, both in transportation and in deposits, or of withdrawals of spirits from the factories or from the assim-

ilated storeroom, or from the trust magazines or deposits for the preparation of cognac without ticket of payment or permit, the penalties established by the customs regulation shall be applied.

ARTICLE 143.

The application of fines does not dispense with the payment of the tax.

ARTICLE 144.

Every contravention against the other obligations of the single text of law or of the present regulations shall be punished with a fine of from 5 to 50 lire.

The offenders against the enactment mentioned in the first paragraph of article 131 of the present regulation shall be punished with the maximum of the said fine.

ARTICLE 145.

The judicial action on contravention becomes barred after one year. A new contravention, punishable with a penalty equal or heavier, or a judicial act, renews the liability.

ARTICLE 146.

When there is conviction of a deed punishable only with pecuniary penalty, and before the ordinary judge has passed sentence, and before this sentence has passed into judgment, the offender, by request signed by himself (which shall be considered as irrevocable), may ask that the application of the fines within the limits of the minimum and maximum be made by the financial administration. This request shall be accompanied by the ticket proving that the deposit of the fine, expenses, and tax has been made.

If the maximum of the fine does not exceed 2,000 lire, the superintendent of finance of the province shall decide. If it exceed 2,000 lire, and up to 4,000, the prefect of the province shall decide. If it exceed 4,000 lire the approval of the ministry of finance shall be necessary.

ARTICLE 147.

The protocol shall be drawn up immediately by the agent, who shall ascertain the contravention.

The product, the material, and the object sequestrated shall be deposited at the office charged with the accountability for the contravention, if such office exists in the commune, and if not then to the municipality, to which, however, no compensation shall be due.

ARTICLE 148.

In the protocol there shall be indicated the date, name, surname, and quality of the discoverers of the contravention and of the witnesses, the fact which constitutes the contravention, with all the circumstances, place, time, quality, quantity of the product of the raw material, and of the object sequestrated, and the office to which they were consigned, the articles of the law or of the regulation to which the contravention refers, and the declaration of the offenders.

The protocol, after being read, shall be subscribed by the offender, by the discoverers of the contravention, and by the witnesses when there are any. If anybody does not know how to write, or if the offender refuses to subscribe, mention shall be made thereof in the protocol.

The protocol shall be received as evidence in court until the contrary is proved.

ARTICLE 149.

If at any time the keeping of the sequestrated object becomes dangerous or expensive the superintendent of finance may order its sale, after previous consent, and with the intervention of the judicial authority, observing the form established by that authority.

ARTICLE 150.

All the sums collected for contravention, after deducting the expenses, and the tax when they have not been paid by the offenders, shall be distributed under the terms of article 191 of the customs regulation.

The quota to be assigned to the receiver of customs devolves on the accountant charged with the accountability and collection of the fine.

But under the terms of article 21 of the law of July 6, 1883, No. 1445 (series 3), the sum to be distributed can not exceed 10,000 lire.

The price of the object confiscated and sold is covered entirely into the treasury of the state.

CHAPTER VII.

Various ordinances.

ARTICLE 151.

The administration shall provide the methods which it may deem best for the adulteration of the residues of work, in order that all possibility may be excluded of their being used as beverages.

ARTICLE 152.

The receptacles of spirits in factories, in rectifying shops and assimilated magazines, and in trust deposits must be provided, at the care and expense of the party concerned, with suitable labels indicating the capacity of the receptacles and the quality of the liquid therein contained.

ARTICLE 153.

The stamped formulas of the application of the present regulations are gratuitously furnished to the manufacturers on their request.

ARTICLE 154.

In conformity with article 12 of July 3, 1864, No. 1827, the action for the reimbursement of difference arising from error of calculation in the collection of tax or from an inexact application of the tax rate, shall become barred both for the administration and for the taxpayer within two years. After the lapse of that time, the administration shall have for another year the right of compensation for the damage suffered from the employee who is responsible for the deficiency or incomplete collection.

The terms here established shall not apply when fraud has been ascertained.

ARTICLE 155.

For the purpose of facilitating the operations of credit between producers and institutes of credit in regard to the spirits derived from factories working under deposit under the terms of articles 28, 29, and 30

of the single text of law, the financial office charged with keeping the register of deposits, upon written demand by the depositor, shall issue to him a special certificate containing the items of the register of deposit—that is to say, the description of the packages and the indication of the quality, of the quantity in hectoliters, and if the degree of strength of the spirits deposited.

In order that a certificate may serve as a base of banking operations in institutes of credit, the passage of spirits of magazines of deposit shall be subject to the restitution of the certificates themselves, by the financial office issuing them.

ARTICLE 156.

For factories, for rectifying and transforming shops, and for stills which at the moment when the present regulations have already been reported and verified, no new reports or new verifications shall be necessary.

Sealed by order of His Majesty:

F. SEISMIT-DODA,
Minister Secretary of State for Finance.

RUSSIA.

LAWS RELATING TO THE TAX ON DISTILLED SPIRITS.

No. 23.] LEGATION OF THE UNITED STATES,
St. Petersburg, January 9, 1895.

Hon. WALTER Q. GRESHAM,
Secretary of State.

SIR: I have the honor to inclose herewith the text of the law and regulations in force in Russia in regard to the use of alcohol in the arts, together with a translation of the same by Lieut. H. T. Allen, military attaché of the legation.

This information was called for in your No. 248, of October 12, 1894, to Mr. Pierce, and I hasten to forward it upon its receipt from the imperial foreign office.

I am, etc., CLIFTON R. BRECKINRIDGE.

Delivery of nondutiable spirits of wine at chemical works for the manufacture of sulphuric ether.

By decision of the committee of ministers, imperially confirmed, December, 1880, it was resolved:

I. To permit for trial purposes, for the period of three years, the annual delivery of 15,000 vedros[1] of pure spirits for the manufacture of sulphuric ether, free of duty, at the Russian Chemical Works in Novosilki, government of Vladinui, but with the full guaranty of the latter, ruble for ruble, by payments which are to be returned in proportion to the amount of spirits used in the manufacture of ether. The spirits before being used in manufacture must be mixed with animal oil, in the presence of an excise officer, in the proportion of 100 vedros of spirits to 20 lots (five-eighths of a Russian pound[2]) animal oil, and the consumption of the spirits shall be ascertained by a control machine which, as well as the animal oil, must be procured at the expense of the administration of the works.

II. To present to the minister of finance (1) the normal expenditure of the limited quantity; (2) to give to the custom administration detailed accounts of the consumption and the order of the supervision at the works of the company, and (3) to permit, at the discretion of the minister and in conformity with the above conditions, the delivery of nondutiable spirits for the manufacture of sulphuric ether for making tannin, and also to other persons upon request.

---

[1] One vedro is equal to 2.8 gallons.
[2] One Russian pound is equal to nine-tenths of an English pound.

The operation of this law was from time to time extended for three years by special imperial permission, and the quantity of undutiable spirits to be delivered was, by imperial order of December 30, 1883, left to the minister of finance. The period of operation of the latter order was extended to January 1, 1896.

Delivery of nondutiable spirits for the manufacture of chemical products.

By decision of the committee of ministers, imperially confirmed, it was resolved:

I. To permit, for trial purposes, for three years, the chemical works of the merchants Ivanoff and Savinkoff in the city of Chimkent (in central Asia) as well as other works for the manufacture of santonin and, at the discretion of the minister of finance, for the manufacture of chemical products, the delivery of spirits free from duty but with full guaranty of the latter, ruble for ruble, by payments to be returned in proportion to the quantity of spirits used in the manufacture of the said products. The spirits before being used in manufacture shall be methylated in the presence of an excise officer.

II. It shall be within the discretion of the minister of finance (1) to determine the yearly quantity of nondutiable spirits which may be delivered to each of the said works; (2) to determine the manner in which the spirits delivered to the works in Chimkent, as well as to others, shall be methylated; (3) to give, in case of need, orders to the excise administration regarding the order of supervision and the consumption at the said works, and (4) to consider all questions which may arise from the application of these laws.

The operation of this law was from time to time extended for three years by special imperial permission. The last of these was promulgated on December 17, 1893.

Delivery of nondutiable spirits at refining works for extraction of sugar from sirup.

By decision of the order of the committee of ministers, imperially confirmed, it was enacted:

I. To permit for trial purposes, for three years, the delivery of nondutiable spirits for the extraction of sugar from sirup remaining at sugar works under the following conditions:

1. The delivery of nondutiable spirits for the above purpose shall be only granted to refining works where not less than 500 poods[1] of sirup are worked per day, and, moreover, only to those which are connected with sugar works.

2. The spirits necessary for use in refining shall be obtained from cellars of the works or from depots under general rules, and each time by special permission of the district supervisor or his assistant; for which purpose the administration of the works shall present to these officials a note stating the quantity of spirits needed, as well as the quantity of sirup which will be worked in one day.

3. The duty for the spirits must be guaranteed in full, ruble for ruble, by payments, until it shall have been methylated.

4. The spirits delivered to the works shall, in the presence of an excise officer, be immediately mixed with the spirits which have already been used at the works, i. e., with that which has passed through the refiners

[1] One pood equals 36 pounds avoirdupois.

filled with carbon and ammonia. The mixture must be so made that a certain quantity of pure spirits shall be mixed with not less than the same quantity of adulterated spirits. In case there should be in the works no spirits already employed and containing ammoniacal combinations, the delivered pure spirits shall be worked up in presence of two officers who shall remain at the works until the spirits to be employed for refining shall be wholly saturated with ammonia and ammoniacal products, i. e., wholly methylated. A statement to this effect must be written out and signed by the two excise officers, the manager of the works, and three workmen. Then the payments, guaranteeing the duty for the spirits employed in the refining works, shall be returned, the entire quantity of the spirits being guaranteed by the works and the property of the proprietor.

5. The quantity of sirup brought to the refining works shall be subject to control, and not more than 300 vedros of nondutiable spirits for each pood of sirup worked daily may be had at the factory.

6. During work, a minimum of 2° of spirits is allowed in the first manufacture, while later on not more than 0.8° is allowed to every pood. If more spirits than the above is consumed, the duty must be paid as usual.

7. Only ordinary distilling apparatus shall be allowed at the said works, such as a caldron and a refrigerator, without rectifying and other apparatus for purifying spirits by distillation, as well as by refrigeration.

8. In case the spirits delivered to the factory are employed for some other use, the proprietor of the works has not only to pay the duty, but also loses forever the right of using nondutiable spirits.

III. The permission to employ nondutiable spirits at refining works lies with the minister of finance, who has also the right of determining more detailed regulations concerning the way of making the spirits undrinkable, of giving the excise officials detailed instructions concerning the order of supervision, and of the consumption of spirits, and of treating all questions arising in the application of these laws.

The action of this law has by degrees been extended to three years by special imperial permission. The term of the last extension expires March 30, 1896.

Delivery of nondutiable spirits for the manufacture of lighting liquids.

[Code of Laws, Book V, Laws on Excise, Edition 1893, Par. 403.]

The spirits destined for the manufacture of lighting liquids is duty free only when delivered to works which have taken upon themselves the lighting of towns. The duty for the spirit taken from cellars of the works or from depots is guaranteed by payments, ruble for ruble. (Secs. 286, 289, 293, 295, 296, 299, 452, 453.) After the spirits have been brought to an undrinkable state by the means shown in section 404, a statement is written out and signed by the excise officials and the police, and serves the proprietor of the works as a receipt for the duty. The payments made for such spirits are not returned before the excise for the spirit consumed is paid to the treasury.

SEC. 404. The spirits employed for lighting liquids after having been brought at the factory to not less than 92° (metallic alcoholometer, par. 250, remark 2), in the presence of the persons designated in section 403, must be measured and there mixed with a certain quantity of turpentine, namely, to 1 vedro of spirits of 92° shall be added not less than five-eighths of a vedro of turpentine.

REMARK.—The proprietor of the works must inform the supervisor of excise collections beforehand of the time when the adulteration of the spirits will take place, in order that he may be able to reach the works in time.

Extract from the order of the minister of finance of December 3, 1894, No. 2754.

As the spirit obtained by means of distillation is used in factories as well as in the manufacture of brandies and liquors (Code of Laws, Book V, Excise Rules, edition 1893, sec. 372–400), of cologne water, perfumes, lacquer, and other products in the composition of which enter wine and spirit, and which are not intended to be drunk (secs. 401, 402), it is not duty free. (This spirit is not adulterated; its use in these manufactures is only subjected to the exactions of the said paragraphs of the law for excise collections, which is promulgated by the ministry of finances.)

SWEDEN.

LAWS RELATING TO THE TAX ON DISTILLED SPIRITS.

No. 36.] LEGATION OF THE UNITED STATES,
Stockholm, November 3, 1894.

Hon. WALTER Q. GRESHAM,
Secretary of State.

SIR: On receipt of Department's instruction No. 23, of October 12, 1894, I requested the complete copies of the laws and regulations of the governments of Sweden and Norway regulating the use of methylated and unmethylated alcohol in the arts, and have received, through the kindness of the minister of foreign affairs, the inclosed copy of the regulations in force in Sweden.

The minister advises me that he will send those concerning Norway at a later date.

I have, etc., T. B. FERGUSON.

No. 39.] LEGATION OF THE UNITED STATES,
Stockholm, November 8, 1894.

Hon. WALTER Q. GRESHAM,
Secretary of State.

SIR: Having sent with my No. 36 of November 3, 1894, the Swedish regulations in reference to alcohol, I have the honor herewith to inclose these in relation to its use in Norway.

I have, etc., T. B. FERGUSON.

REGULATIONS GOVERNING THE DENATURALIZATION OF ALCOHOL (1890).

[Edited by the Bureau of Control and Adjustment, Department of Finances.]

We, Oscar, by the grace of God, King of Sweden and Norway, etc., proclaim that we, since our proposition to the Rigsdag of March 7, 1890, concerning certain amendments of paragraphs 10 and 12 in our regulations for manufacture of alcohol, dated July 13, 1887, has been sanctioned, do hereby declare said paragraphs to take effect after January 1, 1891, and to read as follows:

PARAGRAPH 10.

1. Alcohol manufactured in this country shall, after deduction of 2 per cent, which is exempted from taxation, be taxed at the rate of 50 ore for each liter of normal strength (50 per cent alcohol at +15° C.).

2. Taxes to be paid into the treasury, and for not less than 1,500 liters at one time.

3. When alcohol is exported 51 ore will be refunded for each liter of refined and 50 ore for each liter of crude alcohol of normal strength.

4. On alcohol made unfit for drinking purposes by denaturalization the taxes will be refunded, or if denaturalized at distilleries will be free from taxation, denaturalization fees only to be paid.

PARAGRAPH 12.

1. Distillers are allowed to remove 15 per cent of their alcohol from warehouse without payment of taxes, the remaining 85 per cent being held as security for taxes. Should taxes not be paid before the 1st of the following October the alcohol will be sold by the government.

2. Alcohol denaturalized according to paragraph 10, Mom. 4, will not be taken as security for unpaid taxes.

All concerned, etc.

OSCAR.
F. V. ESSEN.

CONTENTS.

	Page.
Royal circular of October, 1890, about amendments to paragraphs 10 and 12 in the royal regulations concerning manufacture of alcohol	478
Royal regulations of October 10, 1890, concerning denaturalization of alcohol	478
Special instructions to enforce said regulations	484
About denaturalization agencies	489
Forms	493

HIS ROYAL MAJESTY'S REGULATIONS CONCERNING DENATURALIZATION OF ALCOHOL.

[Given at Stockholm Castle, October 10, 1890.]

We, Oscar, etc., by circular of this date, relating to the manufacture of alcohol, etc., paragraph 10, Mom. 4, and the regulations of July 13, 1887, decree as follows:

ARTICLE 1.

Concerning permits to denaturalize alcohol and to sell denaturalized alcohol.

1. Permits to have alcohol denaturalized and taxes refunded will be given to manufacturers and artisans only when used in their own business, and to heads of public schools, museums, and laboratories for the use of the institution only.

2. Distillers may denaturalize alcohol, free of taxes, for sale, during the time the distillery is allowed to run, but can not denaturalize alcohol kept as security for unpaid taxes.

Those named in paragraph 1 wishing alcohol denaturalized must make application for permit in writing to Kongl. M. Befallningshafvande at least thirty days ahead of time, stating—

Time of duration of permit (not to exceed one year).

What use to be made of the denaturalized alcohol.

Place for denaturalization.

Storage place of the denaturalized alcohol.

Applicants to furnish such evidences as, according to paragraph 1, are necessary for permit, and if found to be satisfactory to the Kongl. M. Befallningshafvande, said authority shall issue the permit.

PARAGRAPH 3.

The permit shall contain—

(*a*) Place where denaturalization is to be made, and the use for which it is intended.

(*b*) Caution to those concerned not to use the alcohol for any other purpose than that stated, nor to withdraw any larger quantity from the storage place than will be used at one time, and to be guided by special regulations.

(*c*) Authority for the Kongl. M. Befallningshafvande to revoke the permit.

PARAGRAPH 4.

Yearly permits may be given by the Kongl. M. Befallningshafvande to merchants of good standing to have alcohol denaturalized for sale or to keep denaturalized alcohol for sale and to have taxes refunded; and such permits should contain same precautions as those given in paragraph 3.

PARAGRAPH 5.

Distillers having permit to sell denaturalized alcohol must not sell a less quantity than 250 liters at one time.

ARTICLE 2.

Denaturalization of alcohol and control over the use of denaturalized alcohol.

PARAGRAPH 6.

1. Denaturalizing and supervision of conformants to rules and regulations shall be performed by a sufficient number of controllers, to be appointed by the chief of the bureau of control and adjustment of the department of finance, such appointments to be made for not more than one year, and to be revoked at any time.

2. A witness appointed by the Kongl. M. Befallningshafvande shall be present at the denaturalization of alcohol. The duties of said witness are to carefully observe and note the measuring and proof taking of the alcohol and the admixture of denaturalization agencies, and to witness the controller's certificate.

When denaturalization is made at distilleries the controller shall act as witness.

PARAGRAPH 7.

Permit holders wishing denaturalization performed should apply to the controller, who is required to respond as soon as possible.

PARAGRAPH 8.

Alcohol is denaturalized by adding 10 cubic centimeters of wood spirits and 3 cubic centimeters pyridine bases to each liter of alcohol of normal strength.

Alcohol to be kept for sale must be mixed with suitable coloring matter, according to special regulations by the chief of the bureau of control and adjustment.

PARAGRAPH 9.

In the following instances other denaturalization agencies than those given in the previous paragraphs may be used:

When denaturalization is to be made on account of permit, according

to paragraph 1, Mom. 1, 0.3 per cent pyridine bases, or 2½ per cent wood spirits, by manufacturers of—

1. Varnishes and polishes, 0.25 per cent oil of turpentine, or 2½ per cent wood spirit.

2. Percussion caps and fulminating mercury, 0.25 per cent oil of turpentine, or 0.015 per cent hartshorn oil.

3. Certain chemicals—

(*a*) Alkaloids, 0.25 per cent oil of turpentine, or 0.013 per cent hartshorn oil.

(*b*) Medicinal extracts, 0.25 per cent oil of turpentine.

(*c*) Chloroform, iodoform, and chloral, 0.013 per cent hartshorn oil.

(*d*) Tannic acid, salicylic acid, and salicylated salts, 5 per cent ethyl ether.

4. Vinegar, white lead, sugar of lead, and other acetates, 3 per cent acetic acid (hydrate).

In every case the denaturalization agencies should be calculated to 1 liter of alcohol of normal strength.

2. The chief of the bureau of control and adjustment is authorized to make special regulations as to quantity and kind of denaturalization agencies to be used by public schools, museums. and laboratories.

PARAGRAPH 10.

Permit holders are required to obtain and furnish for the controller the required denaturalization agencies, accurate measures, weights and scales, and sufficient help; coloring matter to be furnished by the controller.

PARAGRAPH 11.

Alcohol for denaturalization must be at least 85 per cent strong and should be free from denaturalization agencies and other foreign substances.

Alcohol to be denaturalized for use in vinegar manufacture may be of lower percentage.

PARAGRAPH 12.

The controller issues certificates of denaturalization according to given forms. At distilleries these are given to the controller, otherwise to the permit holder.

PARAGRAPH 13.

1. Alcohol denaturalized by other agencies than those prescribed in paragraph 8 should be kept under lock and key where it can not be tampered with.

2. Alcohol denaturalized according to permit as per paragraph 1, Mom. 1, shall be kept on the place where it has been denaturalized, and if stationary cisterns are not available it should be kept in vessels, sealed and numbered by the controller, and must not be opened until ready for use.

PARAGRAPH 14.

1. The controller receives from the Government, as compensation and for traveling expenses, 2½ ore for each liter of denaturalized alcohol of normal strength, but his compensation must not exceed 1,200 kroner from the same denaturalization place during the calendar year.

2. If, through the fault of the permit holder, denaturalization is delayed or postponed, or if less quantity than 1,000 liters of normal strength

alcohol are denaturalized, the permit holder is required to pay the controller besides traveling and hotel expenses, a compensation of 6 kroner.

3. Witness present at denaturalization of alcohol is allowed by the Government ½ ore for each liter of denaturalized alcohol of normal strength, the amount to be not less than 5 kroner or more than 15 kroner. If through the fault of the permit holder denaturalization is delayed or postponed the permit holder is required to pay witness 5 kroner.

Controller at distilleries, doing duty as witness, is not entitled to any fees.

4. The controller receives through the bureau of control and adjustment necessary instructions and sufficient appliances and coloring matter.

5. The controller is required to make a yearly property return to the bureau of control and adjustment, and is responsible for lost or damaged articles, if it can not be satisfactorily shown that such loss or damage occurred without his (controller's) fault.

PARAGRAPH 15.

1. Compensation due controller, according to paragraph 14, is paid upon requisition, which should be vouched for by copies of permits given during the month.

2. Witness fees are also paid monthly on bill attested by the controllers.

PARAGRAPH 16.

1. The chief of the bureau of control and adjustment is required to inform the Kongl. M. Befallninghafvande about appointments of controllers and their addresses.

2. Controller is required to immediately inform permit holders of his address.

PARAGRAPH 17.

Those holding permits for denaturalization of alcohol for their own use, with denaturalization agencies other than those given in paragraph 8, are required to keep a memorandum book according to fixed forms, showing the use of the alcohol.

PARAGRAPH 18.

1. Controllers or others appointed by the chief of the bureau of control and adjustment are authorized to examine the memorandum books mentioned in previous paragraph, and to take stock of denaturalized alcohol in places where such books are kept.

2. Books relating to use or sale of denaturalized alcohol, kept by permit holders, should be held open to inspection by the controller.

PARAGRAPH 19.

Holder of permit to keep denaturalized alcohol for sale, who also is allowed to sell other alcohol, if sales room is in common, is not allowed to sell the denaturalized alcohol during hours other than those in which he is allowed to sell the other alcohol. It is prohibited to sell denaturalized alcohol to drunken persons.

PARAGRAPH 20.

Vessels containing denaturalized alcohol should, besid s having penalty rules for unlawful use thereof, be marked "Denaturalized alco-

hol," and "Must not be used internally," and it is the seller's duty to mark vessels in which the alcohol is sold in the same manner.

PARAGRAPH 21.

The Kongl. M. Befallningshafvande is required to inform the bureau of control and adjustment of the issue of a permit on the same date it is issued, and the controller as soon as possible. The controller should also be informed of witness appointed.

PARAGRAPH 22.

On the first week day of each month the controller is required to send reports to the Kongl. M. Befallningshafvande and to the bureau of control and adjustment of denaturalized alcohol on printed forms.

ARTICLE III.

About refund of tax on denaturalized alcohol.

PARAGRAPH 23.

1. Applications for restitution of taxes on denaturalized alcohol should be made in the country at large to Kongl. M. Befallningshafvande, and in Stockholm to the excise offices, who, after verification, should pay the amount due.

Controller's denaturalization certificate should accompany the application.

2. At distilleries where denaturalization has been made it is the duty of the controller to deduct the taxes according to the denaturalization certificates, which should be attached as vouchers.

PARAGRAPH 24.

1. Charges for denaturalization of alcohol are 3 ore (from January 1, 1895, 2 ore, in accordance with royal circular of June 1, 1894) for each liter of normal strength.

2. When restitution for taxes is made these charges should be included, but charges for denaturalization made at distilleries are accounted for by deducting taxes from 94 per cent of the denaturalized alcohol.

ARTICLE IV.

Liabilities for violations of these regulations.

PARAGRAPH 25.

Whosoever, through false returns or otherwise, unlawfully gets the benefit of tax repayment for denaturalized alcohol is liable to penalties according to chapter 22, paragraph 1, Penal Law.

PARAGRAPH 26.

Anyone having permit to use other denaturalization agencies than those named in paragraph 8, who uses the denaturalized alcohol for other purposes than for what in each case has been stated, is liable to a fine of not less than 5 kroner and not more than 500 kroner.

PARAGRAPH 27.

Anyone, for the purpose of defrauding, who mixes denaturalized alcohol with other alcohol, or by any process tries to separate the denaturalization agencies from the alcohol, is liable to a fine of not less than 50 kroner and not more than 1,000 kroner.

PARAGRAPH 28.

Distillers selling denaturalized alcohol in violation of instructions given in paragraph 5, or anyone selling denaturalized alcohol without permit or license, is liable to a fine of not less than 5 kroner nor more than 100 kroner.

PARAGRAPH 29.

Permit holder making false entries in memorandum book, according to paragraph 17, is liable to a fine of not less than 50 kroner nor more than 500 kroner.

PARAGRAPH 30.

Violators of the regulations for which fixed penalties are not provided will be liable to fines of not less than 5 kroner nor more than 100 kroner.

PARAGRAPH 31.

Holders of permits to denaturalize alcohol or to sell denaturalized alcohol, who have been fined according to paragraphs 25, 26, 27, 28, and 29, are besides liable to loss of their privileges, but the Kongl. M. Befallingshafvande may under certain circumstances renew the permits.

PARAGRAPH 32.

One-third of the fines goes to the Government, the other two-thirds to the prosecuting attorney. If means are not available the fines are converted to imprisonment according to law.

PARAGRAPH 33.

When judgment for both taxes and fines have been given, and means are not available, imprisonment according to law is given.

ARTICLE V.

Instructions for keeping regulations in force.

PARAGRAPH 34.

Lands and Stadsfiskaler, Kronbetjenter, and such persons as are otherwise appointed to keep this regulation in force are required to prosecute violations of this regulation.

PARAGRAPH 35.

Memorandum books mentioned in paragraph 17 should be closed at the end of the fiscal year, or before if permit runs out, and sent to the controller, signed by permit holders; the controller, after inspection of same, shall send them to the bureau of control and adjustment.

PARAGRAPH 36.

1. Special instructions for the measuring, weighing, and proof taking of alcohol intended for denaturalization for the examination of required denaturalization agencies will be issued by the chief of the bureau of control and adjustment.

2. The chief of said bureau is also authorized to approve forms in paragraphs 12, 17, and 22.

These regulations to take effect on and after January 1, 1891, at which time regulations of November 18, 1887, regarding restitution of taxes on alcohol used for technical and scientific purposes, are void. After January 1, 1891, controller is required to take stock of denaturalized alcohol kept by permit holders and to make certificates for restitution of taxes according to regulations of November 18, 1887, for both the used and the remaining denaturalized alcohol.

All concerned, etc.,

OSCAR.
F. V. ESSEN.

Special instructions (by the chief of the bureau of control and adjustment, department of finances) for enforcing the regulations of October 10, 1890, concerning denaturalization of alcohol.

PARAGRAPH 1.

Controller is required to call in to the place of denaturalization a witness appointed by the Kongl. M. Befallingshafvande and when denaturalization is performed at distillery to inform the controller of the time.

PARAGRAPH 2.

1. The following instructions should be observed in measuring and proof taking of alcohol.

(*a*) The alcohol should be measured in measures standing on a level horizontal plane. It is not necessary to measure alcohol kept in vessels whose capacity has been certified to by the sealer of weights and measures during next previous or current year. The quantity of alcohol may also be ascertained by weighing, if the weight of the vessels has been certified to as above stated.

(*b*) When alcohol is kept in regularly stamped transportation vessels the controller is required to carefully examine the vessel and contents and then draw off a sufficient quantity to leave enough room for expansion after denaturalization agencies have been added. By measuring the quantity of alcohol drawn off the remaining quantity for denaturalization is ascertained.

(*c*) The alcohol is carefully stirred up before the proof taking, which should be done immediately before denaturalization.

After the proof cylinder has been rinsed in the alcohol to be tested a sufficient quantity is put in the cylinder; the thermoalcoholometer, well dried, is thereafter immediately inserted in the cylinder, and all precautions prescribed in regulations for proof taking of alcohol are observed. The reading of the apparent strength and the taking of the temperature are done simultaneously as soon as the thermoalcoholometer has obtained the temperature of the alcohol. It is prohibited to dilute, heat, or cool the alcohol.

(*d*) The apparent strength should be given accurately to a half degree, giving whole or half per cent showing just below or on the surface of the alcohol when the eye is on a line with the surface.

(*e*) Temperature should be given in whole degrees, and when the mercury column stops between the lines of full degrees the next highest degree should be taken as a basis for the calculation.

2. When, on account of the apparent strength and temperature (from Table III, Bränvins profvaren), the quantity of alcohol at +15° C. has been found, the quantity of liter (A) of alcohol of normal strength is ascertained by multiplying the measured liters (l) with the quantity of alcohol (m) and the number 0.02, viz:

$$A = 0.02 \times l \times m.$$

In the final result all decimals but the first one should be thrown away.

3. When the quantity of alcohol of normal strength is to be ascertained by weight, it is done according to instructions in chapter 6 Bränvins profvaren.

PARAGRAPH 3.

Denaturalization of alcohol may also be made in stationary cisterns, which are so graduated that the volume can be correctly ascertained. It is the duty of the controller to make drawings and descriptions of such cisterns for the bureau of control and adjustment, and it is also his duty, by measuring with water, to ascertain the accuracy of the graduating, and to send to the bureau a report of the inspection of the cistern with water.

PARAGRAPH 4.

1. When alcohol is denaturalized according to paragraph 8 the wood spirits and pyridine bases should be thoroughly mixed with each other before they are added to the alcohol.

2. When denaturalized with camphor the camphor is first dissolved in a sufficient quantity of alcohol (3 to 4 cubic centimeters of alcohol to each gram of camphor) and then added to the balance of the alcohol.

3. The quantity of coloring matter to be used will be found in instructions accompanying the coloring matter issued from the bureau.

4. After prescribed quantities of denaturalization agencies (and coloring matter when it is used) have been added the fluid is agitated until thoroughly mixed.

PARAGRAPH 5.

Both controller and witness are required to keep a denaturalization book in which to keep memoranda of the amount of liters (or gross and net weight) of alcohol, the temperature, and apparent strength, and also amount of liters of normal strength; amount and kind of denaturalization agencies, and the amount of liters, temperature, and apparent strength of denaturalized alcohol, and both books should be signed by both controller and witness. When denaturalization is made at distillery the controller should keep above-named memorandum book instead of witness.

2. At denaturalization places, where memorandum book is to be kept, the controller is required to put in the amount of liters of denaturalized alcohol, to be certified to by the witness.

PARAGRAPH 6.

After denaturalization the controller is required to affix to vessels or cisterns in which denaturalized alcohol is kept a memorandum signed by himself, stating—

Number of vessel or cistern.

Amount of liters of alcohol of normal strength.
Volume and kind of denaturalization agency.
Volume and apparent strength and temperature.
Date of denaturalization.
Penalties for unlawful use of the alcohol.

PARAGRAPH 7.

Denaturalization of alcohol should not be made in vessels of less capacity than 200 liters, except when a smaller quantity is to be denaturalized.

PARAGRAPH 8.

The controller is required to ascertain that the alcohol to be denaturalized is free from denaturalization agencies and other foreign mixtures. He should test, by smell or taste (best done after the alcohol has been diluted with equal or double volume of water) and when suspicion that such things are present arise it is advisable to test it for wood spirits and pyridine.

1. For discovery of wood spirits bromine solution is used, which is decolorized by wood spirits. It is done in the following manner: Twenty-five cubic centimeters of the alcohol to be tested are put in a glass flask, and to this is added, drop by drop, during agitation, a solution of bromine prepared as below until the color of the alcohol remains yellowish; if one-half cubic centimeter or less bromine solution has been used the alcohol may be considered free from wood spirits. This test should be made in full daylight. In case the alcohol to be tested is yellow in color, three-fifths of the part to be used for testing is distilled over, and the colorless distillate is mixed with enough water to make up to the amount before distilling, and the bromine test is then applied as above.

Bromine solution is prepared as follows: 2.447 grams C. P. potassium bromate ($KBrO_3$) and 8.719 grams C. P. potassium bromide (KBr) are dissolved in enough water to make 1 liter; 100 cubic centimeters of this solution are mixed with 20 cubic centimeters diluted sulphuric acid, made by mixing 10 cubic centimeters concentrated sulphuric acid with 30 cubic centimeters water, and let the mixture cool.

2. For discovery of pyridine the alcohol is first tested with blue litmus paper for acid or neutral reaction.

(*a*) If the litmus paper remains blue, 10 cubic centimeters of the alcohol are mixed with 5 cubic centimeters of a 5 per cent alcoholic solution of anhydrous cadmium chloride and shaken well and set aside for five minutes. If a precipitate is formed by the end of that time the alcohol contains pyridine (if the precipitate forms earlier the amount of pyridine is larger).

(*b*) If the litmus paper turns red, 10 cubic centimeters of the alcohol are well shaken with 1 gram burnt magnesia and filtered, the filtered liquid, which should not now turn blue litmus paper red, is tested according to *a*.

It is always best to test for pyridine first, and if that has been found it is not necessary to make any test for wood spirits.

At vinegar manufactories the alcohol should always be tested with litmus paper for acid and alkaline reactions.

If the controller, in testing alcohol for denaturalization, has cause to believe that the alcohol has been tampered with, he must at once report to the bureau of control and adjustment, inclosing memorandum of tests sealed in presence of witness.

PARAGRAPH 9.

To ascertain the quantity of acetic acid (hydrate) in vinegar, a so-called vinegar tester is used. It consists of *a*, graduated cylindrical glass tube on wooden stand with the lower end closed. The vinegar tester is filled to its lowest graduating mark with vinegar to be tested, and to this is added one, or at most two, drops phthalein solution (one gram phenol phthalein in 500 grams 95 per cent alcohol), and then, cautiously add during shaking, enough of a double normal solution of soda, until the liquid obtains a permanent red color. The graduating mark to which the liquid then has reached indicates the percentage of acetic acid (hydrate) in the vinegar.

As the liquid clings to the walls of the glass tube, forming a concave surface, the reading should be done from the lowest point of the concave surface. If, for example, the red color appears when the liquid stands between the graduating lines 6 and 8, it is an indication that the vinegar contains 7 per cent acetic acid (hydrate).

Each liter of the vinegar is thus equal to $\frac{7}{3}=2\frac{1}{3}$ liters of 3 per cent.

If the quantity of alcohol to be denaturalized is 576.8 liters of normal strength, to this alcohol shall be added at least 576.8 liters vinegar of 3 per cent or $576.8\times\frac{3}{7}=247.2$ liters 7 per cent vinegar, the rule being to multiply the volume of the alcohol of normal strength with 3 and to divide the product with the number indicating the strength of the vinegar (which in this case is 7), the result indicating how many liters of vinegar should be added.

PARAGRAPH 10.

The controller is required to examine the permit holders' memorandum books at each naturalization place where they are kept, and then take stock of denaturalized aclohol, which, in case it is kept in transportation vessels, may be done by measuring rod according to instructions in table on page 35.

PARAGRAPH 11.

1. The controller is authorized to make necessary corrections in permit holders' memorandum books when found to be wrong.

2. Should such corrections not be followed, or should the controller find graver violations, he is required to immediately make a report about it to the bureau.

PARAGRAPH 12.

Denaturalization certificates are numbered separately for each denaturalization place in successive order for the time the permit is in force, but monthly reports for each calendar year.

PARAGRAPH 13.

1. Controller's denaturalization book is kept in common for all the denaturalization places in his district and numbered in accordance with date of performance.

2. On first week day of each quarter the controller must send to the bureau of control and adjustment a copy of the denaturalization book from previous quarter.

PARAGRAPH 14.

Controller must keep copies of monthly reports and denaturalization certificates.

PARAGRAPH 15.

Controller should acquire an accurate knowledge of the use of alcohol at manufactories and institutions where denaturalization is made, and also the basis upon which calculations may surest be made for the quantity of denaturalized alcohol used at those manufactories and institutions.

PARAGRAPH 16.

1. Controller may, if he so wishes, buy necessary implements from the bureau at fixed prices, and said implements will be rebought by the bureau, if in good order, at same prices.

2. Blank forms for denaturalization certificates, monthly reports, controller's and witness' denaturalization books, and those mentioned in paragraph 6 as "memoranda," will be supplied to controller upon requisition to the bureau.

PARAGRAPH 17.

Upon application from dealers in denaturalizing agencies the chief of the bureau of control and adjustment will appoint certain persons to test and examine such agencies, with the exception of vinegar. Such tested denaturalization agencies, kept in secure vessels with unbroken seals, and with examiner's certificate of purity, may be used for denaturalization of alcohol without further tests.

PARAGRAPH 18.

When other than according to paragraph 17 tested denaturalization agencies are kept, the controller is permitted to take samples for testing, and when not found to be in accordance with regulations, to postpone the denaturalization.

STOCKHOLM, *November 17, 1890.* K. LINDBERG.

Table for calculations of the approximate volume of alcohol kept in transport vessels of the most commonly used style.

Height of fluid expressed in per cent of bung diameter.	Corresponding volume expressed in per cent of the whole volume of the vessel.		
	Wooden vessels.		Iron vessels, cylindrical.
	Long and narrow.	Short and thick.	
1.	2.	3.	4.
10	3.0	4.0	5.2
15	7.0	8.0	9.4
20	11.5	13.0	14.2
25	17.5	18.0	19.5
30	23.7	24.0	25.3
35	30.0	30.1	31.2
40	36.4	36.4	37.4
45	43.0	42.8	43.6
50	50.0	50.0	50.0
55	57.0	57.2	56.4
60	63.6	63.6	62.6
65	70.0	69.9	68.8
70	76.3	76.0	74.7
75	82.5	82.0	80.5
80	88.5	87.0	85.8
85	93.0	92.0	90.6
90	97.0	96.0	94.8

Example 1.—Long and narrow vessel: Bung diameter, 84 centimeters; height of fluid, 32 centimeters; height of fluid in per cent of bung diameter, 38.1 centimeters. With this per cent corresponds, according to

column 2, the volume per cent 34. If the whole volume is 487.5 liters, the volume of the remaining fluid is $\frac{34}{100} \times 487.5 = 165.7$ liters.

Example 2.—Short and thick vessels: Bung diameter, 96 centimeters; height of fluid, 78 centimeters; height of fluid in per cent of bung diameter, 81.2 centimeters. With this per cent corresponds, according to column 3, the volume per cent 88.2. If the whole volume is 538.3 liters, the volume of the remaining fluid is $\frac{88.2}{100} \times 538.3 = 474.8$ liters.

Rule.—Measure the whole of the vertical bung diameter in centimeters, and also the height of the fluid in centimeters. Divide the latter by the former, and multiply the result with 100, when the height of the fluid in per cent of the bung diameter is obtained. In columns 2, 3, or 4 the percentage for the volume corresponding to the height of the fluid is obtained. By multiplying this percentage by the volume of the vessel and dividing the result by 100, the volume of liters is found.

About denaturalization menstrua.

The common denaturalization menstruum is composed of 10 parts of wood spirit and 3 parts of pyridine bases, and of this mixture 13 cubic centimeters are added to each liter of alcohol of normal strength (or 1.3 liter to 100 liters alcohol of normal strength).

Wood spirits is obtained, besides other substances, by dry distillation of wood. The raw product must, to be used as a denaturalization agency, be purified. The principal ingredient in the purified product is methyl alcohol, besides which it contains aceton, allyl alcohol, and strong-smelling (at a higher temperature boiling) wood oils. Pure methyl alcohol is so like the ordinary alcohol that it can easily be used in its place, on which account wood spirit to be used for denaturalization of alcohol must not contain more than a certain quantity of methyl alcohol. Instead, it must contain so much more aceton, allyl alcohol, and wood oils, which not only have a strong denaturalization capacity, but also make it possible to detect wood spirit in alcohol on account of its capacity to bind bromine and thereby decolorize one through its red-brown color, characterized bromine solution.

On this account wood spirit to be used for denaturalization should have the following characteristics:

The wood spirit should be colorless or only lightly yellowish. By distillation of 100 volumes, at a normal barometric pressure of 760 millimeters, at least 90 volumes should distill over when the temperature has reached 75° C. Wood spirit should dissolve in all proportions of water without any appreciable turbidity. It must contain more than 30 per cent of aceton and not less than 1 per cent or not more than 1½ per cent of substances that decolorize bromine solution.

In testing wood spirit the following has to be ascertained:

1. *Color.*—As colorless as possible, but not darker than Rhein wine.

2. *Boiling point.*—When 100 cubic centimeters, put in a flask fixed with a thermometer and connected with a condenser and the flask gradually heated so that the distillation proceeds only drop by drop. The distillate collected in a graduated glass cylinder should be at least 90 cubic centimeters at +75° C., and under normal barometric pressure.

Should the barometric pressure diverge from the normal, 1° should be added or deducted for each thirtieth millimeter. For example, at 775 millimeters pressure, 90 cubic centimeters should distill over at +75.5° C., but at 745 millimeters pressure, at +74.5° C.

3. *Solubility in water.*—Twenty cubic centimeters wood spirit with 40 cubic centimeters water should give a clear or only faintly opalescent fluid.

4. *Relation to solution of soda.*—When 20 cubic centimeters of wood spirit are shaken with 40 cubic centimeters of a solution of soda (sp. gr. 1.3), the supernatant layer of wood spirit should measure at least 5 cubic centimeters at the end of half an hour.

5. *Quantity of aceton.*—One cubic centimeter of a mixture of 10 cubic centimeters wood spirit and 90 cubic centimeters is shaken in a small glass cylinder with 10 cubic centimeters double normal soda solution (80 grams, NaHO in 1 liter), then 5 cubic centimeters of double normal solution of iodine (254 grams, I in 1 liter) are added and repeatedly shaken. After a thorough shaking of this liquid with 10 cubic centimeters of ether (sp. gr. 0.722), the previously formed and separated iodoform is dissolved in the ether. After the ether has cleared, 5 cubic centimeters of it are drawn off by means of a pipette and poured on a previously weighed watch glass. The ether solution is allowed to slowly evaporate and is subsequently put over sulphuric acid for two hours, after which it is weighed. The addition to the weight of the watch glass should not be less than 0.07 gram.

6. *Absorption of bromine.*—One hundred cubic centimeters of solution of potassium bromate and potassium bromide, prepared as stated below, are mixed with 20 cubic centimeters of diluted sulphuric acid, diluted as stated below. To this mixture, representing a bromine solution of 0.703 gram bromine, is added, drop by drop, during agitation, wood spirits from a burette graduated into one-tenth of a cubic centimeter until a permanent decolorization is effected. Not more than 30 cubic centimeters and not less than 20 cubic centimeters wood spirits should be required for decolorization. This test should be made in full daylight.

The bromine solution is prepared as follows:

(*a*) *Bromine salt.*—After at least two hours' drying at +100° C. and cooling off in an exsiccator 2.447 grams potassium bromate ($KBrO_3$), and 8.719 grams potassium bromide (KBr), previously tested for its purity, are weighed and dissolved in enough water to make the whole measure 1 liter.

(*b*) *Diluted sulphuric acid.*—One volume of concentrated sulphuric acid is mixed with three volumes of water and the mixture set aside to cool.

Pyridin bases consist of a part of the crude coal oil, and belongs to that series which has a specific gravity of 0.90 to 0.99.

For denaturalization use it is purified in suitable way and consists of a mixture of pyridine (C_5H_5N), and with it homolog bases, picoline, lutidine, etc. These pyridine bases have a nasty, stinking odor and a strong denaturalization quality, and are at the same time perfectly soluble in water and alcohol, and when ignited burn like alcohol; they are also easily detected in alcohol.

Pyridine bases used for denaturalization should have the following qualities: They should be colorless or faintly yellow, must not contain more than 10 per cent of water, 90 per cent should distill over at +140° C. under normal barometer pressure; they must be soluble in all proportions of water, showing only a faint turbidity; they must also be free from ammonia.

In testing pyridine bases the following should be ascertained:

1. *Color.*—As stated for wood spirit.

2. *Relations to cadmium chloride.*—Ten cubic centimeters of a solution of 1 cubic centimeter pyridine bases in 100 cubic centimeters water are mixed with 5 cubic centimeters of a 5 per cent watery solution of dry fused cadmium chloride ($CdCl_2$), and well shaken. A crystalline

precipitate should at once separate. (With this test it is possible to detect pyridine even should it be mixed with ethereal oils for the purpose of disguising the pyridine odor; also when ordinary alcohol has been mixed with denaturalized alcohol. It is only when pyridine has been neutralized with an acid that no precipitate is formed, but by separating the acid through shaking with magnesia, and mixing the filtrate with cadmium chloride, a precipitate will form if pyridine is present. To neutralize the acid with sodium solution and by the odor try to detect the pyridine is not sufficient, especially if ethereal oils are present.) Five cubic centimeters of Nessler's reagents mixed with 10 cubic centimeters of the above-mentioned pyridine solution should give a white precipitate (a yellow precipitate indicates ammonia).

3. *Boiling point.*—As prescribed for wood spirits, with the exception only that the 90 per cent should not have distilled over until the temperature has reached +140° C.

4. *Solubility in water.*—As prescribed for wood spirits.

5. *Percentage of water.*—Twenty cubic centimeters of pyridine bases shaken with a 20 cubic centimeter solution of soda (1.4 sp. gr.) should leave a supernatant layer measuring at least 18.5 cubic centimeters.

6. *Titration of bases.*—One cubic centimeter pyridine bases dissolved in 20 cubic centimeters water are mixed with normal sulphuric acid until one drop of the mixture causes a blue, soon-disappearing ridge on kongo paper. Kongo paper is made by drawing filtering paper through a solution of 1 gram kongo red in 1 liter water and drying. Special denaturalization agencies, used to denaturalize alcohol for special purposes, are hartshorn oil, turpentine oil, ethyl ether and camphor.

In testing these the following is to be ascertained:

A. Hartshorn oil (bone oil or Dippel's oil).

1. *Color.*—Black-brown.

2. *Boiling point.*—As for wood spirit, with the exception that only 5 per cent should distill over at +90° C., but at least 50 per cent at +180° C.

3. *Pyrrolreaction.*—One gram hartshorn oil is dissolved in 100 grams (122 cubic centimeters) 95 per cent alcohol, and $1\frac{2}{10}$ cubic centimeters of this solution are diluted with alcohol to 40 cubic centimeters, thereby obtaining a solution containing about 0.025 gram hartshorn oil in 100 cubic centimeters alcohol. If a spruce fir stick, saturated with concentrated hydrochloric acid, is put in 10 cubic centimeters of this solution, it should in a few minutes show a perfect red color.

4. *Relation to mercuric chloride.*—Five cubic centimeters of a 1 per cent alcoholic solution of hartshorn oil should, when mixed with 5 cubic centimeters of a 2 per cent alcoholic solution of mercuric chloride, at once give a voluminous, flaky precipitate. Five cubic centimeters of the 0.025 per cent alcoholic solution of hartshorn oil (described in 3) should, with 5 cubic centimeters of the alcoholic mercuric chloride solution, show a visible turbidity.

B. Turpentine oil ($C_{10}H_{16}$).

1. Specific gravity should, at +15° C, be from 0.855 to 0.865.

2. *Boiling point.*—As for wood spirit, with the exception that not more than 5 per cent should distill over at +150° C., but at least 90 per cent at +160° C.

3. *Solubility in water.*—Twenty cubic centimeters turpentine oil shaken with 20 cubic centimeters water should after separation leave a supernatant layer measuring at least 19 cubic centimeters.

C. Ethyl ether (sulphuric ether, $C_4H_{10}O$).

1. *Specific gravity.*—Not to be over 0.730.

2. *Solubility in water.*—Twenty cubic centimeters of ether shaken with 20 cubic centimeters water should after clearing give a supernatant layer measuring at least 18 cubic centimeters.

D. Camphor. Only the natural camphor ($C_{10}H_{16}O$) should be used. Melting point, +175° C.

FORM NO. 1.

Memorandum book for the year 1891, showing the use of denaturalized alcohol at the vinegar factory of P. Sjögren, No. 7, Vesterstad, in —— Parish of —— County.

REMARKS.

1. Memorandum book is closed and signed by the permit holder at the end of the year and transmitted to the controller.

2. If permit runs out before the end of the year and a new permit is not obtained, the book should then be closed, signed, and transmitted to controller.

3. Controller enters on the debit side memorandum of denaturalized alcohol; in the column for amount of liters alcohol is entered the volume of alcohol after denaturalization agencies have been added. Permit holder enters on the debit side what remains from previous year and on the credit side all memoranda about the use of the alcohol.

Debit.

Month.	Day.			Denaturalized alcohol.
				Liters.
Jan.	2	Remaining from previous year:		
		In vessel No. 25	119.4	
		In vessel No. 26	598.6	
		In cistern No. 2	1,327.3	2,045.3
Jan.	8	Denaturalized:		
		In vessel No. 1	476.5	
		In vessel No. 2	532	
		In cistern No. 1	645.6	1,654.1
		* * *		
		——— ———, *Controller, etc.*		
		——— ———, *Witness*		
		Total		50,327.5

Credit.

Month.	Day.			Denaturalized alcohol.
				Liters.
Jan.	3	Used from vessel No. 25		119.4
Jan.	3	Used from vessel No. 26		74.6
Jan.	5	Used from vessel No. 26		194
Jan.	7	Used from vessel No. 26		194
Jan.	8	Used from vessel No. 26		136
Jan.	8	Used from cistern No. 2		68
Jan.	8	Used from cistern No. 2		202
Dec.	31	Total used		48,608.3
		Remaining in vessel No. 37	96.4	
		Remaining in vessel No. 38	527.6	
		Remaining in cistern No. 1	1,073.9	
				1,697.9
		Shortage		21.3
		* * * *		
		Total		50,327.5

Inspected without remarks.
——— ———, *Controller.*

Vesterstad, December 31, 1891.

P. SJÖGREN.

Inspected without remarks.
——— ———, January 2, 1892.

——— ———, *Controller.*

FORM NO. 2*a*.

Denaturalization certificate No. 16 for restitution of taxes on alcohol to vinegar manufacturer, P. Sjögren, in Vesterstad, of —— County.

[The permit is in force from January 16, 1890, to January 15, 1891.]

Alcohol denaturalized during previous permit period (according to certificate No. 15), liter normal strength	27,351.9	
Alcohol denaturalized this day, liter normal strength	1,517.8	
		28,869.7

		Kroner.
Taxes on this day denaturalized, 1,517.8 liter alcohol		758.90
In which are included denaturalization fees at 3 ore for each liter	45.53	
Balance to be refunded	713.37	
		758.90

VESTERSTAD, *January 8, 1891.*

——— ———,
Controller.

Correctness of this certified to.

——— ———,
Witness.

FORM NO. 2*b*.

Denaturalization certificate No. 1, for restitution of taxes on alcohol to vinegar manufacturer, P. Sjögren, in Vesterstad, of —— County.

[The permit is in force from January 16, 1891, to January 15, 1892.]

Alcohol denaturalized during previous permit period (according to permit No. —), liter normal strength		.....
Alcohol denaturalized this day, liter normal strength		2,578.2

		Kroners.
Taxes on this day denaturalized, 2,578.2 liter alcohol		1,289.10
In which are included denaturalization fees at 3 öre for each liter	77.35	
Balance to be refunded	1,211.75	
		1,289.10

VESTERSTAD, *January 20, 1891.*

——— ———,
Controller

Correctness of this certified to.

——— ———,
Witness.

FORM NO. 3*a*.

Denaturalization certificate No. 1 for deduction of taxes on alcohol at Farmer J. Johansson's distillery, Forsbacka, in —— County.

[The permit is in force from January 2 to December 31, 1891.]

Alcohol denaturalized before during permit period (according to certificate No. —), liter normal strength.

Alcohol denaturalized this day, liter normal strength 13,004.7.

In the accounts at the distillery shall be deducted taxes on 94 per cent of this day denaturalized alcohol, or for 12,224.4 liter with 6,112 kroner and 20 ore.

FORSBACKA, *January 13, 1891.*

——— ———,
Controller.

Correctness of this certified to.

A. B. PETERSSON,
Controller of the distillery.

FORM NO. 3 *b*.

Denaturalization certificate No. 2, for deduction of taxes on alcohol at Farmer J. Johansson's distillery, Forsbacka, in —— County.

[The permit is in force from January 2 to December 31, 1891.]

Alcohol denaturalized, before and during permit period (according to certificate No. 1), liter normal strength	13,004.7	
Alcohol denaturalized, this day, liter normal strength	2,489.6	
		15,494.3

In the accounts at the distillery shall be deducted taxes on 94 per cent of the this day denaturalized alcohol or for 2,340.2 liter with 1,170 kroner and 10 ore.

FORSBACKA, *October 14, 1891.*

——— ———,
Controller.

Correctness of this certified to.

S. NYMAN,
Controller at the Distillery.

FORM NO. 4 *a*.

Report No. 1, concerning denaturalization of alcohol within the undersigned's district in —— County for the month of January, 1891.

Permit holder and denaturalization place.	Permit in force.		Denaturalized alcohol, liter normal strength.			
	From—	To—	Before and during permit period.	Date of denaturalization.	During the month.	Total.
1. Vinegar manufacturer, P. Sjogren, Vesterstad.	1,16,90	1,15,91	27,351.9	1, 8	1,517.8	28,869.7
	1,16,91	1,15,92	.....	1,20	2,578.2	2,578.2
2. Utskankningsbolaget in X city	10, 1,90	9,30,91	.....	1, 3	3,264.1	
				1,28	2,375.0	
			17,327.0	.....	5,639.1	22,966.1
3. Farmer J. Johansson, Forsbacka distillery.	1, 2,91	12,31,91	.....	1,13	13,004.7	13,004.7
4. Hat maker ——, in Y village	1, 2,91	12,31,91				
5. Merchant ——, in X city	1,20,91	12,31,91	.....	1,24	1,204.3	1,204.3

——, February 2, 1891.

——— ———,
Controller.

FORM NO. 4 *b*.

Report No. 2, concerning denaturalization of alcohol within the undersigned's district in —— County, for the month of February, 1891.

Permit holder and denaturalization place.	Permit in force.		Denaturalized alcohol, liter, normal strength.			
	From—	To—	Before and during permit period.	Date of denaturalization.	During the month.	Total.
1. Vinegar manufacturer, P. Sjogren, Vesterstad	1, 16, 91	1, 15, 92	2,578.2	2,12	2,723.4	5,301.6
2. Utskankningsbolaget in X city	1, 10, 90	9, 30, 91	22,966.1	2,14	4,327.2	27,293.3
3. Farmer J. Johansson, Forsbacka distillery	1, 2, 91	12, 31, 91	13,004.7	.....	.....	13,004.7
4. Hat maker ——, in Y village	1, 2, 91	12, 31, 91	.....	2, 2	1,005.8	1,005.8
5. Merchant ——, in X city	1, 20, 91	12, 31, 91	1,204.3	2,20	1,098.0	2,302.3
6. Varnish Stock Co., X city	2, 9, 91	2, 8, 92	.....	2,16	1,324.7	1,324.7

——, March 2, 1891.

——,
Controller.

FORM NO. 5.

Denaturalized alcohol must not be taken internally.

Whomsoever for the purpose of defrauding the revenues either mixes denaturalized alcohol with other alcohol, or in any way tries to separate the denaturalization agencies from the alcohol, shall be fined from 50 to 1,000 kroner.

The person fined must also pay taxes on the alcohol unlawfully used. (See royal circular of October 10, 1890, concerning denaturalization of alcohol, pars. 27 and 31.)

NORWAY.

Government resolution of June 29, 1894.

No. 23.

The resolution passed by the Parliament on June 29, 1894, regarding duties to the treasury on the preparation of alcohols and brandy, etc.

The resolution reads as follows:

From July 1, 1894, the following shall be paid to the treasury:

A. Tax on the preparation of malt, after the following rules:

1. The tax on grain put in the kiln to be turned into malt is 21.1 ore for each kilogram of grain.

2. A drawback on all tax paid is allowed to the amount of 18.14 ore for every liter of beer which is exported abroad in quantities of 4 hectoliters or above, if an application therefor is made within two years after the exportation.

B. The tax on the manufacture of brandy is paid according to the following rules:

1. The tax on the brandy obtained by the distillation of any particular liquor is 1 krone and 90 ore for every liter calculated at 100 per cent of alcoholic strength, measured after samples of brandy authorized by the King at any time, which is to be paid for the low wines obtained (the sweet, impure brandy obtained by distillation or the so-called fore and after drop) unless they have either been rendered unfit for redistillation after a method satisfactory to the inspection personnel or they are brought back to the distilling apparatus existing in the distillery for a new distillation and for the appraising of the distillate obtained therefrom, the low wine being distilled either directly or by being mixed with at least three times as much of the material intended for distillation.

2. In the preceding tax there is granted for ever liter of brandy of the weakest strength the following deduction:

(*a*) As a drawback for the tax on the malt consumed, in case in its preparation a tax has been assessed after the preceding letter A, 13.1 ore if the brandy has been produced wholly from grain and potatoes, and 3.3 ore if in the preparation other material has been used.

(*b*) As a drawback for loss after the graduation, 15.8 ore.

The last-named drawback, however, is only granted if the taxpayer causes a determination of the amount and strength of the brandy to be made within thirty hours from the time when connection has been established through the conducting tubes between the distilling apparatus and the receiver wherein the brandy is received. These thirty hours do not include the term in which the preparation of brandy must stop by reason of the law of June 28, 1887, section 7.

3. When Norwegian brandy on which the above-named tax has been paid in amounts to 1 decaliter or above, and observing the detailed provisions regarding the supervision which the competent Government department shall determine, is exported abroad, then the tax is to be returned to the amount of 1 krone and 90 ore, and for impure brandy

to the amount of 1 krone and 84 ore per liter of a strength of 100 per cent if the application therefor is made within two years after the exportation. In order that brandy may be regarded as pure it must be proved, in a manner to be determined in detail by the competent Government department, that after the assessment of the tax it has undergone a complete purifying process and redistillation.

4. When brandy is rendered unfit for drinking (methylated), or when it is found in some other satisfactory manner to be guaranteed against being used for drink, which the competent Government department may allow, it is to be relieved of the production tax in the same way as brandy, and the owner of the brandy has to bear the cost of the methylation and the supervision thereof.

C. The tax on maize in grain or ground and on durra which is used for the preparation of brandy outside of distilleries, which, in view of the above-described untaxed malt for its preparation, and which, in consequence, are obliged to export abroad all the brandy which they produce, after the following rules:

1. On maize there shall be paid a tax of 3 ore per kilogram based upon a quantity of brandy corresponding to the maize used, calculated at 0.375 liters of brandy of a strength of 100 per cent from 1 kilogram of maize; this brandy if exported abroad before the 30th of April in the first operating period after that in which the maize has been used if the above tax has been previously paid, shall be entitled to a drawback to the amount of 8 ore per liter after detailed determination by the competent Government department.

2. The same way on durra, calculating 1.30 liters of brandy of a strength of 100 per cent from 1 kilogram, there is to be paid a tax of 2.4 ore per kilogram, and upon exportation 8 ore per liter are refunded.

Law on the sale of methylated brandy.

We, Oscar, by the grace of God, King of Norway, of the Goths and Wends make known: That there has been submitted to us a resolution of May 22, of this year, by the regular Parliament now assembled, which reads as follows:

SECTION 1. Brandy which, in view of the decision of the finance and customs department, has been rendered unserviceable for use as drinks (methylated) can not be made the object of sale without special permission from the same department.

The permission to sell can only be given to persons who have the general trade license, or who do not trade in brandy as a drink or in other goods mixed with brandy or prepared therewith, or who in some other way may use brandy in their industry. The permission is given only for one calendar year at a time, and for a definite quantity, and it may be recalled at any time.

SEC. 2. Before any permission for keeping methylated brandies on sale is given for the first time, the application for obtaining such permission must have been submitted to the respective communal government and civil authorities.

SEC. 3. Those who have received the permission to sell methylated brandy are obliged to keep an account of the receipts and sales of such brandy, and a book shall be arranged in the manner determined by the department of finance and customs, and must be kept up to date at all times. The requisition tickets spoken of in section 5 must be kept as appendixes to that account book.

SEC. 4. The methylated brandy can only be sold in the condition in

which it was at methylation. It must not be delivered to the purchaser except on a requisition which indicates his residence, the quantity required, and the use to be made of it; and the vessel in which it is delivered must be provided with a label marked "methylated spirits." The buyer of methylated brandy must not use it for drink in any form.

The sale must not take place at the time and under the conditions when the sale or retail of brandy for drink is permitted.

SEC. 5. The officers of the civil authorities and of the brandy supervision, as well as those of the customs department, are authorized first to inspect the seller's premises at any time and to ascertain whether the book hereby ordered is properly kept and provided with the requisite tickets belonging thereto, and whether the stock agrees with the book, and to take samples of as much as half a liter of the stock.

In case the amount of methylated brandy or its contents in alcohol is found to be less than might be expected from ordinary loss, while no reason is found for imposing a penalty for fraudulent practices, the full customs or production tax shall be paid on the lacking quantity of alcohol after the decision of the finance and customs office.

SEC. 6. Against the provision contained in sections 3 and 4 of this law there shall be paid to the treasury from 5 to 500 kroner, unless the act is liable for other reasons to a higher penalty. The offense shall be regarded as civil—as coming under the civil code.

SEC. 7. This law becomes operative beginning with the 1st of January, 1892.

Thus we have decreed and confirmed, as we herewith decree and confirm, this resolution as a law under our hand and the seal of the Kingdom.

Given at the castle at Stockholm on June 13, 1891.

OSCAR.

BLAIR. LEHMANN.

Regulations regarding the methylation of brandy intended for sale by virtue of the law of June 13, 1891.

1. Application for obtaining permission to sell methylated brandy must contain a declaration stating that the applicant does not deal in brandy for drink or in any goods mixed or prepared with brandy or used as brandy in any other way in his industry. They shall, furthermore, give information regarding the probable yearly need of the applicant.

2. The applications are sent to the competent magistrate by whom, after the declaration of the civil authorities and the director has been obtained, they are sent by an officer to the department. If an application relates merely to a renewal of a permission previously granted (for the preceding year), and if the magistrate has no objection to the renewal, the application need not be submitted to the civil authorities and to the directors, but, on the other hand, a declaration must be obtained from the customs chamber of the locality.

3. The permission here spoken of merely grants the right to sell brandy which has been methylated by an addition of 2½ per cent in volume of a mixture consisting of four parts by weight of methylated alcohol and one part by weight of pyridine bases which are procured from the customs department.

4. The methylation is regularly carried out at the customs locality where the applicant resides. In order that brandy may be allowed to be methylated it must not have a mixture or peculiar smell, nor be of less alcoholic strength than 85 per cent. The smallest amount that

may be allowed to be methylated at any time is 100 liters. The vessels necessary for the mixture must be furnished by the owner of the alcohol himself.

5. The owner of the brandy, or his representative, must, before the methylation, submit an assurance upon trust and promise from the owner himself that the quantity of alcohol in question (number of liters) shall only be used for sale in accordance with the law above named. Under-tax brandy is presented for tax in view of the permission given by the department.

6. The book which in virtue of section 3 of the law the dealer concerned is to keep regarding the entrance and exit of methylated spirits, is to be arranged after the model given below. It must be paged and punched and authorized by the respective customs chamber. The book must be on hand at every methylation which is performed for the dealer in question. The officer who performs the methylation must enter in the book the amount of spirits methylated by him, and its alcoholic strength as given by the alcoholometer, and the weight of the vessel itself (tare dead weight), and the gross weight; whereupon the methylated spirits are delivered.

7. The methylated spirits shall be kept unmixed and retailed from the same vessel in which it was delivered at the time of methylation. The vessels shall be distinctly marked. The requisition tickets mentioned in section 4 of the law are given running numbers by the dealers, and are entered with these and the quantities stated on them in the book. The amounts must be footed up every day.

8. The customs chambers ascertain at least once every quarter whether the book of sale is properly kept, whether anything special is to be noted in regard to the requisition tickets, and whether the stock, both in regard to amount and alcoholic strength, agrees with the book. In case of any irregularity the customs chamber shall give information thereof to the department.

The customs department decides how much shall be allowed for the methylated substance used and for other expenses which may possibly be connected with the methylation and with the supervision on the premises of the holder of the permission. The allowance for the expenses of methylation must be paid before the spirits are taken away. If they are not taken away within twenty-four hours after the methylation, then the storage duty fixed in the customs schedule shall be paid from that time until the spirits are taken away.

Royal Norwegian Government, finance and customs department, Cristiania, December 19, 1891.

STEEN,
JENS G. STUB.

Model.

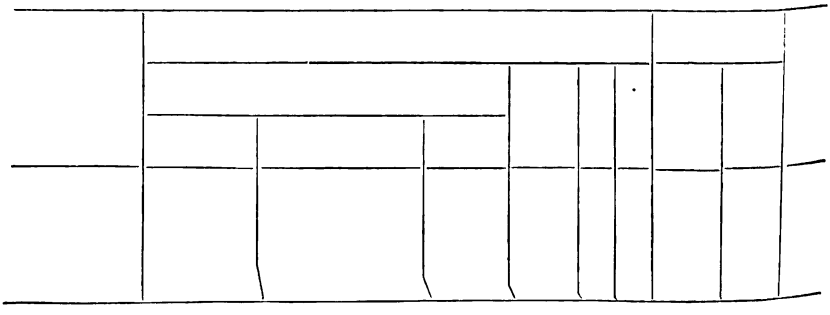

Circular to the customs chambers, No. 3 (1887), from the Royal Norwegian Government, finance and customs department.

Herewith are sent a number of copies of ordinances regarding freedom from duty or freedom from tax of brandy for technical use and untaxed deliverance of spirit varnishes, which ordinances take the place of the rules on this subject contained in the circular sent by the department to the officers on July 3 and October 17, 1884, and July 17, 1886, and the circulars to the customs chambers of July 3 and October 17, 1884.

HAUGLAND.

CHRISTIANIA, *June 11, 1887.*

ORDINANCES REGARDING FREEDOM FROM DUTY OR FREEDOM FROM TAX FOR BRANDY FOR TECHNICAL USE AND UNTAXED DELIVERY OF SPIRIT VARNISHES.

Untaxed delivery of imported spirits, or delivery for drawback of the tax for homemade spirits after the spirits have been rendered unfit for drink, is granted by the customs department after application sent in through the customs chamber of the locality where the spirits are imported or where they are desired to be delivered, if the application only concerns homemade brandy, or if there is no customs department at the locality, through the competent chief controller. The application must contain sufficient information showing in what manner and in what quantities the applicant uses spirits in his industry. The permission is granted for a calendar year and for a certain quantity of spirits, but it may be recalled at any time. The permission is not granted to persons who manufacture or deal in perfumeries or beverages.

2. Brandy is rendered unfit for drink by adding to it 10 per cent of methyl alcohol purchased for that purpose from the Government. The methylation is not performed on spirits having a mixture or a peculiar smell, or showing an alcoholic strength of less than 70 per cent, nor in less quantities each time than 30 kilograms, and only on the entire contents of one or several packages. The vessels necessary for the mixture have to be furnished by the owner of the spirits.

3. The owner of the spirits, or his representative, must present before methylation a written assurance, upon trust and promise from the owner that the quantity concerned (number of kilograms) of spirits shall only be used for technical purposes in his own industry. In case several combine in order to get a quantity of spirits methylated, such security shall be given by them all, jointly, and shall contain a statement as to the fraction of the quantity to be taken by each one of them.

4. The attestation regarding the strength and amount of the spirits and the amount of methyl alcohol added thereto shall be noted for home brandy or for such brandy as has previously paid the duty, on the assurances just mentioned, but for imported brandy that has not paid the duty a special statement is necessary. Thereupon, if the methylation has taken place in the customs office, the assurances for home brandy, or for brandy that has previously paid its duty, are turned over to the customs treasurer, but if it has taken place at the inspection department they are turned over to the chief inspector, by whom they are sent to the customs department.

5. The customs department shall determine what shall be paid for the methyl alcohol used and for expenses attending the inspection which is necessary when the methylation is not carried out by the customs department at the customs office.

(*a*) For spirits that have not paid duty and are to be methylated, a

fixed price for the accompanying methyl alcohol must be paid before the spirits are delivered. If the spirits are not taken away within twenty-four hours after the methylation a storage fee shall be paid from that time until they are taken away, as is laid down in section 6 of the customs tariff.

(*b*) For spirits that have previously paid duty the same amount is paid as for home spirits, and for spirits that have previously paid duty the same amount is refunded as for home spirits, and the refunding shall be for both kinds, after deduction of the indemnity due is made, if the methylation has taken place in the customs department by the customs treasury, against receipts on which are noted the assurances mentioned in No. 3. This receipt being sent to the customs department the amounts paid will be refunded by the customs treasury. For spirits having a strength of 94 per cent of alcohol or more the drawback is calculated as for pure spirits. For spirits of lower strength such legitimations for purifying are required as are required in the circular of the department of June 27, 1882.

(*c*) For spirits which are methylated in the inspection department the customs department takes steps to have the drawback of the tax paid to the person in question.

6. The same rules that prevail in regard to the untaxed delivery of spirits prevail also for imported spirituous varnishes and polishes, but with this proviso, that the goods need not have a certain weight nor the spirits therein contained a certain strength, and that it is not required that the goods shall be used in the person's own industry. The assurances mentioned in No. 3, also, are not required in this case; methyl alcohol is added in an amount of 10 per cent of the weight of the goods.

7. The officers of the civil authorities of the customs department are authorized to make inspection at any time in the workshop and other manufacturing rooms belonging to persons using methylated spirits.

Circular from the Royal Norwegian Government, finance and customs department.

With the circulars of the department of June 11, 1887, and August 2, 1888, is hereby given that for the methylation of spirits for technical purposes. Hereafter pure methylated alcohol will not be used, but instead thereof a mixture of four parts by weight of methyl alcohol and one part by weight of pyridine bases, of which 2½ per cent by volume is added to the spirits.

This methylation substance will be purchased from the Government in the same way as the methyl alcohol previously used for the same purpose, and is to be paid for by the owner of the goods to the treasury till further notice, at the rate of 1.20 kroner, per liter.

Notice is given that the customs chamber and the chief inspectors will receive copies of this circular sent to them direct from here.

STEEN.
JENS G. STUB.

CHRISTIANIA, *June 16, 1891.*

Circular to the customs chambers, No. 5 (1891), from the Royal Norwegian Government, finance and customs department.

Herewith are sent copies of ordinances regarding the methylation of brandy intended for sale in virtue of the law of June 13, 1891.

In regard to the permissions therein spoken of, certain dealers in food

supplies will have the privilege hereafter to have brandy methylated for technical use in their own industry, in agreement with the circulars of the department of June 11, 1887, August 2, 1888, and June 16, 1891. If, in accordance with circular of August 2, 1888, they shall receive permission to have the methylation of brandy carried out in some other way than by a mixture of methyl alcohol and pyridine bases, they will, however, be obliged to keep a book showing the receipts and the employment of the methylated spirits as per model given below, which book shall be paged and authorized regularly by the competent customs chamber. The book shall be kept on hand at every such methylation for the respective holders of the permission, and in the book entries shall be made by the officers performing the methylation of the amount of the methylated spirits and the alcoholic strength thereof as given by the alcoholometer. The customs chamber of the place where the holder of the permission has his establishment ascertain at least once every quarter whether the book here spoken of is properly kept, and whether the stock agrees with the book. In case any irregularity is found, the customs chamber gives information thereof to the department.

The customs chamber is urged to send to the customs inspector in Christiania the amount of methyl alcohol which it must have in its possession. In regard to the purchase of and account for the general methylation substance which has taken the place of the methyl alcohol, the same rules are to be observed as are prescribed in department circular of October 17, 1884, for methyl alcohol.

STEEN.

CHRISTIANIA, *December 19, 1891.*

Model.

Copy of finance and customs department circular of August 2, 1888.

In connection with the circular of June 11, of this year, which is for the methylation of spirits that the owner is to employ in his own industry for the preparation of joiners' polish and varnishes, or for the manufacture of authority is given to use one-half of 1 per cent of turpentine oil instead of the 10 per cent of methyl alcohol prescribed in No. 2 of the provisions of the circular above named. The oil of turpentine is purchased by the owner of the spirits, but before it is used it must be approved by the customs inspection, or, if the methylation is to take place in the inspecting department, by the competent chief inspector.

Notice is given at the customs chamber, and chief inspectors will receive copies of this circular sent to them direct from here.

His Royal Majesty's regulation concerning denaturalization of alcohol, given at Stockholm Castle, October 10, 1890.

We, Oscar, by the grace of God, King of Sweden and Norway, etc., make it known: By circular of this date, relating to manufacture of

alcohol, etc., paragraph 10, Mom. 4, regulations of July 13, 1887, the following have been adopted:

Article 1.—Concerning permits to denaturalize alcohol and to sell denaturalized alcohol.

PARAGARPH 1.

Permit to have alcohol denaturalized and taxes refunded will be given to—

Manufacturers and artisans only when used in their own business, and to heads of public schools, museums, and laboratories for the use of the institution only.

PARAGRAPH 2.

Distillers may denaturalize alcohol, free of taxes, for sale during the time the distillery is allowed to run, but can not denaturalize alcohol kept as security for unpaid taxes.

Those named in paragraph 1 wishing alcohol denaturalized must make application for permit in writing to the Kongl. M. Befallningshafvande at least thirty days ahead of time, stating—

Time of duration of permit (not to exceed one year).

What use to be made of the denaturalized alcohol.

Place for denaturalization.

Storage place of the denaturalized alcohol.

Applicants to furnish such evidences as, according to paragraph 1, are necessary for permit, and if found to be satisfactory to the Kongl. M. Befallningshafvande, said authority is given to issue the permit.

PARAGRAPH 3.

Permit shall contain—

(*a*) A place where denaturalization is to be made and the use for which it is intended.

(*b*) Caution to those concerned not to use the alcohol for any other purpose than that stated, and not to withdraw any larger quantity from the storage place than will be used at one time, and to be guided by special regulations.

(*c*) Authority for the Kongl. M. Befallningshafvande to revoke the permit.

PARAGRAPH 4.

Yearly permits may be given by the Kongl. M. Befallningshafvande to merchants of good standing to have alcohol denaturalized for sale, or to keep denaturalized alcohol for sale and to have taxes refunded, and such permits should contain same precautions as those given in paragraph 3.

PARAGRAPH 5.

Distillers having permit to sell denaturalized alcohol must not sell a less quantity than 250 liters at one time.

Article 2.—Denaturalization of alcohol and control over the use of denaturalized alcohol.

PARAGRAPH 6.

Alcohol to be kept for sale must be mixed with suitable coloring matter according to special regulation by the chief of the bureau of control and adjustment.

PARAGRAPH 9.

1. In the following instances other denaturalization agencies than those given in previous paragraphs may be used:

When denaturalization is to be made on account of permit according to paragraph 1, Mom. 1, 0.3 per cent pyridine bases or 2½ per cent wood spirits by manufacturers of—

(1) Varnishes and polishes, 0.25 per cent oil of turpentine or 2½ per cent wood spirits.

(2) Percussion caps and fulminating mercury, 0.25 per cent oil of turpentine or 0.015 per cent hartshorn oil.

(3) Alkaloids, 0.25 per cent oil of turpentine or 0.013 per cent hartshorn oil.

(*b*) Medicinal extracts, 0.25 per cent oil of turpentine.

(*c*) Chloroform, iodoform, and chloral, 0.013 per cent hartshorn oil.

(*d*) Tannic acid, salicylic acid, and salicylated salts, 5 per cent ethyl ether.

(4) Vinegar, white lead, sugar of lead, and other acetates, 3 per cent acetic acid (hydrate). In every case the denaturalization agencies should be calculated to 1 liter alcohol of normal strength.

2. The chief of the bureau of control and adjustment is authorized to make special regulations as to quantity and kind of denaturalization agencies to be used by public schools, museums, and laboratories.

PARAGRAPH 10.

Permit holders are required to obtain and furnish for the controller required denaturalization agencies, accurate measures, weights, and scales, and sufficient help. Coloring matter to be furnished by the controller.

PARAGRAPH 11.

Alcohol for denaturalization must be at least 85 per cent strong and should be free from denaturalization agencies and other foreign substances.

Alcohol to be denaturalized for use in vinegar manufacture may be of lower percentage.

PARAGRAPH 12.

The controller issues certificates of denaturalization according to given forms. At distilleries these are given to the controller, otherwise to the permit holder.

PARAGRAPH 13.

1. Alcohol denaturalized by other agencies than those prescribed in paragraph 8 should be kept under lock and key where it can not be tampered with.

2. Alcohol denaturalized according to permit as per paragraph 1, Mom. 1, shall be kept on the place where it has been denaturalized, and if stationary cisterns are not available it should be kept in vessels, sealed and numbered by the controller, and must not be opened until ready for use.

PARAGRAPH 14.

1. The controller receives from the Government as compensation and for traveling expenses 2½ ore for each liter denaturalized; but the compensation for the same controller must not exceed 1,200 kroner for the same denaturalization place during the calendar year.

2. If, through the fault of the permit holder, denaturalization is delayed or postponed, or if less quantity than 1,000 liters normal strength alcohol are denaturalized, the permit holder is required to pay the contoller, besides traveling expenses and hotel expenses, a compensation of 4 kroner.

3. Witness present at denaturalization of alcohol is allowed by the Government one-half ore for each liter of denaturalized alcohol of normal strength, the amount not to be less than 5 kroner or more than 15 kroner. If, through the fault of the permit holder, denaturalization is delayed or postponed the permit holder is required to pay witness 5 kroner.

Controller at distilleries doing duty as witness is not entitled to any fees.

4. The controller receives through the bureau of control and adjustment necessary instruction and sufficient appliances and coloring matter.

5. The controller is required to make a yearly property return to the bureau of control and adjustment, and is responsible for lost or damaged articles if it can not be satisfactorily shown that such loss or damage occurred without his (the controller's) fault.

PARAGRAPH 15.

1. Compensation due controller according to paragraph 14 is paid upon requisition, which should be vouched for by copies of permits given during the month.

2. Witness fees are also paid monthly on bill attested to by the controller.

PARAGRAPH 16.

1. The chief of the bureau of control and adjustment is required to inform the Kongl. M. Befallningshafvande about appointments of controllers and their addresses.

2. Controller is required to immediately inform permit holders of his address.

PARAGRAPH 17.

Those holding permits for denaturalization of alcohol for their own use with other denaturalization agencies than those given in paragraph 8 are required to keep a memorandum book according to fixed forms, showing the use of the alcohols.

PARAGRAPH 18.

1. Controllers or others appointed by the chief of the bureau of control and adjustment are authorized to examine those in previous paragraphs mentioned in memorandum books, and to take stock of denaturalized alcohol in places where such books are kept.

2. Books relating to use or sale of denaturalized alcohol kept by permit holders should be held open to inspection by the controller.

PARAGRAPH 19.

Holder of permit to keep denaturalized alcohol for sale, who also is allowed to sell other alcohol, if sales room is in common, is not allowed to sell the denaturalized alcohol during other hours than those during which he is allowed to sell the other alcohol. It is prohibited to sell denaturalized alcohol to drunken persons.

PARAGRAPH 20.

Vessels containing denaturalized alcohol should, besides having

penalty rules for unlawful use thereof, be marked "Denaturalized alcohol" and "Must not be used internally." And it is the seller's duty to mark vessels in which the alcohol is sold in the same manner.

PARAGRAPH 21.

The Kongl. M. Befallningshafvande is required to inform the bureau of control and adjustment of the issue of a permit on the same date it is issued and the controller as soon as possible. The controller should also be informed of witness appointed.

PORTUGAL.

LAWS RELATING TO THE TAX ON DISTILLED SPIRITS.

WRIT OF LAW.

Don Carlos, by the grace of God, King of Portugal, and the two Algarves, etc., make known to all our subjects that the General Cortes have decreed and that we desire to enact the following law:

ARTICLE 1. The brandy and alcohol produced on the mainland of the Kingdom and in the adjacent islands, after the publication of this law are subject to the production tax of 50 reis per liter of liquid produced under the following terms:

SECTION 1. For the collection of this tax the whole, or at least two-thirds, of the number of the factories, adjacent islands, and the mainland at present in existence, and representing at least two-thirds of the total production of last year, shall constitute themselves into a corporation, the exercise of the industry of the distillation of alcohol within that corporation being duly regulated by the Government in harmony with the following provisions:

(*a*) The time to be fixed for the duration and continuance of the corporation of the factories shall not exceed five years.

(*b*) The corporation shall pay to the State for each one of the incorporated factories the sum of 2,000$000 reis as compensation for the expenses of supervision of the quantity and quality of the liquids produced; and the total of the compensation shall not be less than 10:000$000 reis.

(*c*) The corporation shall undertake the obligation to buy the sweet potatoes that are annually produced in the Azores and offered on the market on those islands in such condition as to admit of being distilled.

If it is officially ascertained that in any year, with the exception of the first, in which this law becomes operative, the alcohol of the corporation derived from the Azores which has paid the respective production tax is less in quantity than that produced in the same year by the incorporated factories of the Azores, the difference, or the stock that has not entered into consumption, shall be charged to the account of the following year for the purchase of sweet potatoes in the proportion of 8 kilograms of potatoes for every liter of alcohol. The agriculturists shall be suitably notified in the month of February, by means of public announcement, in order to regulate the arrangement to be made in their planting in accordance with this circumstance.

In any case—that is to say, both in those years in which the working men of the Azores have been notified to regulate the planting of potatoes in accordance with the consumption of alcohol and in those years in which those announcements have not to be made—the incorporated factories of the Azores shall not distill for alcohol anything but sweet potatoes so far as their raw material is found in the market of the island in such condition as to admit of being utilized for distillation.

The price which the incorporated factories shall have to pay for sweet potatoes shall be the maximum price that has been paid during the last three years for the largest quantity bought for the factory in each of these three last years; and for any excess that there may be the price

shall never be more than 20 per cent above the maximum cost previously indicated.

(*d*) The corporation shall oblige itself to buy annually from the agriculturists of Algarve the maximum quantity of figs and barob beans that have been bought during the last three years for distillation, and the selling price that the agriculturists may demand may amount to a maximum of 200 reis for every 15 kilograms of barob beans and 300 reis for an equal amount of figs.

(*e*) The corporation shall oblige itself to buy all the chief roots suitable for distillation cultivated on the mainland and offered on the market at the highest price of the last three years.

(*f*) Disputes that may arise between the agriculturists and the corporation of factories shall be decided on principles of equity by a commission composed of three members, the president being the judge having jurisdiction over the place where the agriculturist resides, one of the voters chosen by the corporation, and the other chosen by the agriculturist, and invited for this purpose to meet by the administrative authority of the municipality where the raw material to be distilled was produced.

(*g*) The Government shall guarantee to the corporation the maintenance of the import duty established in the new list, to wit:

Simple brandy and alcohol in cask or per decaliter of pure alcohol, 1$930 reis.

Simple brandy and alcohol in bottles, jugs, and similar vessels, per decaliter of liquid, 2$360 reis.

Alcoholic beverages not specified, per decaliter of liquid, 2$500 reis.

And it will also guarantee to the corporation the importation duties established in the new list as the maximum for all the raw material applicable in the country for the distillation of alcohol.

(*h*) The Government shall regulate the importation of foreign alcohol so as to avoid the formation of great quantities whenever the premium on exportation granted by foreign nations, or any other circumstance, shall permit this importation to be made at the price equal to or less than 253 reis per liter.

SEC. 2. The factories that are outside the corporation and those that are newly established are subject to the payment for the alcohol which they produce of a duty of 100 reis per liter of liquid used.

SEC. 3. The following are exempted from the payment of the production tax:

1. Brandy and alcohol derived from the distillation of wine, dregs of wine, and grape hulls, whether produced by the distiller himself or not.

2. Brandy and alcohols derived from the distillation of figs, medlars, arbute berries, and other fruits of home production, when made by means of simple stills of a capacity not exceeding 750 liters, whether produced by the distiller himself or not.

3. The brandy and alcohol derived from the distillation of sugar cane produced in the islands of Madeira, whether produced by the distiller himself or not.

SEC. 4. The brandy and alcohol produced in the factories or stills, whatever be the raw material distilled, shall be of good quality and shall be perfectly rectified and sufficiently pure. Transgressors of this regulation shall be punishable under the terms of the legal provision and of the regulation.

SEC. 5. The brandy and alcohol, of whatever derivation, shall be subject on the mainland of the Kingdom, furthermore, to the payment of the tax on consumption and sale (water tax) in the following form:

1. Brandy and alcohol, simple or prepared, in jugs, flasks, bottles, or

similar vessels, per liter of liquid: Introduced for consumption in Lisbon, 270 reis; sold for consumption in Oporto, 230 reis.

2. Simple brandy and alcohol in any other vessel, per liter of pure alcohol: Introduced for consumption in Lisbon, 270 reis; sold for consumption in Oporto, 230 reis.

3. Brandy and alcohol sold for consumption in the rest of the country, per liter of liquid, 70 reis.

In these taxes are included all the additional ones at present in force.

The brandy and alcohol produced in the adjacent islands and destined for local consumption in those islands continue exempt from the tax on sale (water tax).

SEC. 6. The brandy and alcohol produced in the adjacent islands which have not paid or which are not obliged to pay the production tax shall pay the duties whenever presented for shipment to any customs office of the mainland or the adjacent islands, as if it was foreign alcohol.

SEC. 7. Hereby is abolished the duty of 2 per cent ad valorem on brandy and alcohol destined for the improvement of wines created by the law of May 17, 1878, this duty having been replaced by a tax on exportation of five-tenths of a real per liter of wine exported through the custom-house of Oporto.

The customs line of Villa Nova de Gaia shall be abolished; the Government shall give the instructions necessary for the collection and supervision of the consumption tax and that of the water tax to be made in that locality under the terms of the general law.

ART. 4. The Government shall issue the regulation necessary for the execution of this law and also all those which relate to the hygiene, health, and conditions of work of the laborers employed in the factories, giving an account to the Cortes of the use made of the authorization conferred upon it by them.

ART. 5. The contrary legislation is repealed.

We therefore order all authorities to whom the knowledge and execution of the said law belong that they shall fulfill and keep it and cause it to be fulfilled and kept as completely as is the same set forth.

The minister and secretary of state of the interior shall cause it to be printed, published, and distributed.

Given in the palace on the 12th day of April, 1892.

The King with rubric and guard.

JOAQUIM PEDRO DE OLIVEIRA MARTINS.

[Place of the great seal of the Royal Arms.]

DECREE.

Using the authority granted to the Government by article 4 of the writ of law of April 12 of the current year, I deem it proper to approve the regulation concerning the production tax on alcohol and brandy produced on the mainland of the Kingdom and the adjacent islands, and which has been signed by the minister and secretary of state of the interior.

The president of the council of ministers, minister and secretary of state of affairs of the Kingdom, and the minister and secretary of state of the interior shall thus understand it and cause it to be executed.

Palace, on May 12, 1892.

JOSÉ DIAS FERREIRA.
JOAQUIM PEDRO DE OLIVEIRA MARTINS.

REGULATIONS CONCERNING THE PRODUCTION TAX ON ALCOHOLS AND BRANDY.

CHAPTER I.

GENERAL PROVISIONS.

ARTICLE 1. The brandy and alcohol produced on the mainland of the Kingdom and the adjacent islands are subject to the production tax modified by the law of April 12 of the present year.

Single section. The following are excepted from the provisions of this article:

1. The brandy and alcohol derived from the distillation of wine, lees of wine, and grape hulls which are of the distiller's own production, whether produced by the distiller himself or not.

2. The brandy and alcohol derived from the distillation of figs, medlars, arbute berries, and other fruits of home production, whether produced by the distiller himself or not, when performed in simple stills of a capacity not exceeding 750 liters.

3. Brandy and alcohol derived from the distillation of sugar cane produced on the island of Madeira, whether produced by the distiller himself or not.

ART. 2. The amount of production tax spoken of in the preceding article is 50 reis per liter of liquid produced.

Single section. The amount, however, shall be 100 reis for the product of factories that are outside of the associations spoken of in Chapter IX. That association shall be constituted under the terms of the law of April 12, 1882.

ART. 3. The factories that are established or may be established within the limits of the cities of Lisbon and Oporto shall be respectively subject to the consumption tax and the water tax for alcohols and brandies consumed within the said cities.

Single section. The same factories shall also be subject to the water tax for the alcohols and brandies which shall issue from them for consumption in the other municipalities of the Kingdom.

ART. 4. In conformity with the determination of the preceding article in the parts relating to the exaction of the taxes and imposts, the factories established in any municipalities of the country outside of Lisbon and Oporto shall be respectively obliged to make payment of the consumption tax or water tax to which the alcohols and brandies intended for consumption in Lisbon and the other municipalities of the Kingdom are subject.

ART. 5. For liquors and creams manufactured in Lisbon and Oporto as alcohols and brandies which have respectively paid the duties and imposts designated in articles 1 and 3 the consumption tax and water tax shall be abolished.

Single section. Similarly there shall be exempt from the consumption tax and the water tax the liquors and creams in any municipalities of the Kingdom outside those of Lisbon and Oporto manufactured with alcohols and brandies which have already paid the said duties and imposts.

CHAPTER II.

CONCERNING THE SUPERVISION OF THE TAX.

ART. 6. The superior administration of the production tax and the superintendence in its supervision belong to the general direction of customs of indirect contribution.

ART. 7. The service relating to the production tax on alcohols and brandies in the general direction of customs belongs to the first department, to which all the personnel charged with the supervision of the said impost shall be directly and immediately subordinated.

ART. 8. A table conformable to model No. 4 shall be sent by the director of the department of finance to the first department of the general direction of customs by the 20th day of the month immediately preceding the one to which it refers.

ART. 9. The first department of the general direction of customs and indirect contribution, by means of the table spoken of in the preceding article and by any other means which it may deem convenient to use, shall exercise the necessary supervision on the production tax.

ART. 10. In order to aid the chief of the first department of the general direction of customs in the fiscal service which is incumbent on him, he shall have five commissaries of alcohol, who shall have jurisdiction in the customs districts of Lisbon, Oporto, Ponta Delgada, Angra, and Funchal.

ART. 11. It is incumbent on the commissaries directing the service in every circumscription to watch over the manner in which the provisions of the regulations, the orders of the Government, and the orders of the general direction of customs are fulfilled which relate to the enactment of the writ of law of April 12 of the current year, both as regards the supervision and on the parts of the manufacturers, and also to fulfill the order which may have been given to them by their superiors.

Single section. The commissaries, although the enactment of the preceding article is specially incumbent on them, can not exempt themselves from any other fiscal service of the indirect contribution proper to their office with which they may have been charged by the general direction of customs.

ART. 12. The commissaries shall be selected out of the personnel joined to the general direction of customs and indirect contribution, and they shall receive the salaries to which they are entitled as such.

ART. 13. Near every distillery there shall be a fiscal station composed of 1 chief of station, and 3 fiscal guards.

SECTION 1. The personnel of these stations shall be appointed out of the personnel of the list of the fiscal guard, and if there are any employees that were on the force of the extinct fiscal police these shall be appointed for such functions.

SEC. 2. The fiscal station shall have under its charge—

1. To make entries in the books of models Nos. 5 and 6.
2. To assess on the first day of every month the production tax, and the consumption tax and the water tax, which are to be paid with it.
3. To send to the respective revenue notary, on the day indicated in No. 2, the table of assessment referred to in article 53.
4. To proceed to the verification of the quality of the alcohol and to undertake any visits and inspection which relate to such verification.
5. To draw up a protocol in the manner of model No. 10.
6. To ascertain whether the factories have provided themselves with the proper license, not allowing their operations so long as the license has been presented.
7. Not to allow any raw material to enter the factories which has not been mentioned in the licenses.
8. To seize any alcohol or brandy that has been withdrawn from the production tax and other duties and imposts that are to be paid with it, making suitable report for the imposition of fines.

9. To employ in general all the means conducive to avoid the perpetration of fraud prejudicial to the revenue or to public health, and any infraction of these regulations that has not been punished.

SEC. 4. The services mentioned in Nos. 6 to 10 of section 1 shall be performed—

(*a*) In municipalities where there exists the fiscal station near the factories by the personnel of each station.

(*b*) In the other municipalities of the Kingdom by the personnel of supervision in the service of the water tax.

SEC. 5. In the municipalities in which there is more than one fiscal station the service of the preceding paragraph shall be performed by all the stations in rotation.

SEC. 6. For the purposes of No. 4, of section 1 of this article, the commissaries of alcohol shall inform themselves, in the laboratory annexed to the technical tribunal of litigation, in the processes which, under the terms of the respective instruction, they have to employ in order to verify the purity of the alcohol.

SEC. 7. The personnel of the fiscal station may be altered or modified in number and quality as circumstances and the needs of the service may require.

ART. 14. The fiscal station shall be placed near the door serving as entrance and exit to the factory in a dwelling furnished by the factory.

ART. 15. When in any city, town, or place there exists different factories, all or some of them of little importance, a single fiscal station with a larger number of fiscal guards may perform the service of all.

ART. 16. In case of the preceding article the head porters of the fiscal station shall be in the factory which has the largest operation from which the personnel necessary for the service of the other shall be detached, there being always in each one of them a fiscal employee to aid and replace, in the duty of keeping accounts, the chief of the station.

Single section. The keeping of account shall be directed and performed under the responsibility of the chief of the station.

ART. 17. In case of temporary interruption of work of distillation, owing to lack of raw material or any other casual circumstance, the parts of the personnel of supervision that may be dispensed with may be employed in other fiscal service.

ART. 18. When the work of a factory stops its owners shall send the requisite information to the chief of the fiscal station, who shall send it at once to the respective commissary, and the latter to the first department of the general direction of customs.

Single section. In the case referred to in this article the entire supervision shall be withdrawn only when within the factories there shall remain no quantity of alcohol, or when an inventory of the remaining alcohol having been made its owner guarantees the payment of the impost due.

ART. 19. Every outer door of the factory in which no overseer resides, and which is to be locked at the close of the work of the day, shall have two locks with different keys.

Single section. One of the locks shall be placed by the Government and its key shall be in the keeping of the chief of the fiscal station, and none of the doors shall be opened or locked except in the presence of the chief or of the functionary who replaces him, who shall punctually appear at the designated hour for that purpose.

ART. 20. The distilling factories shall furnish the fiscal station stamped balances of sufficient strength and solidity and all the weights

and other instruments necessary for the verification of the quality and quantity of the alcohols produced by them.

SECTION 1. All these instruments and others which may be indicated in special regulation as necessary for determining the capacity of the vessels shall be previously stamped and shall be in the keeping of the fiscal station.

SEC. 2. These stamps shall be made by comparison with standard measures and instruments which shall be cut for that purpose by the general direction of customs.

CHAPTER III.

CONCERNING THE DISTILLATION OF ALCOHOLS AND BRANDIES.

ART. 21. The Government shall cause to be placed in every one of the factories, in a suitable place, counting devices which shall measure either the liquids subject to distillation or the product distilled, or the liquids to be distilled and the distilled products.

Single section. The counting devices may indicate, besides the quantity, the alcoholic strength of the liquid which issues through the distilling apparatus.

ART. 22. In the first case of the preceding article each decaliter of liquid to be distilled shall have the equivalent in pure alcohol that may be determined in special instruction.

ART. 23. All the expense of purchase and setting up of the counting devices shall be at the charge of the factories.

ART. 24. The distilling factories which in the future may be established, or those now in existence, when they are modified or extended, shall be constructed under a fiscal plan in such way that the building shall be surrounded by a wall 3 meters high and 0.50 meter thick, with a single door for the service of entrance and exit. The distance between the outside of the building of the factory and the wall shall not be greater than 15 meters or less than 5.

Single section. The tubing and communications between the different sets of apparatus shall be exposed and readily accessible to the inspection by the fiscal agent.

ART. 25. The factories now in existence shall, within the space of six months, execute the order contained in the single section of the preceding article. The other provisions of the same article shall be applicable to them only when, the work having stopped, they resume it after the expiration of at least one year, saving the provision of the single section of article 90.

ART. 26. The license referred to in the decree of October 21, 1863, shall not be granted in order that new distilling factories may be established in buildings which do not fulfill the condition designated in article 24 of these regulations.

ART. 27. Individuals who, after the publication of these regulations, shall desire to establish factories for alcohol and brandy, or who desire to continue distillation already begun and interrupted for any reason, license for which has been terminated, shall make declaration conformable to model No. 1, which they shall submit thirty days before beginning the work to the revenue inspector of the district.

Single section. These declarations shall be made in triplicate, and in one of them the requisite receipts shall be entered.

ART. 28. In regard to the factories and stills already in existence and which shall be in operation from the date of publication of these regu-

lations, their owners shall make a declaration like those of model No. 1, which shall be required for the directors of the department of revenue within thirty days, counting from the one on which the same regulation shall begin to be operative.

ART. 29. The declaration to which articles 27 and 29 refer shall be satisfactory in the following respects:

1. Locality where the factory is to be established.
2. The nomination of the factories.
3. Name and residence of the owner or manager.
4. Designation of the distilling and rectifying apparatus, system, capacity of the boilers, and name of the maker
5. Raw material which is used or to be used in the distillation, and the mode of procedure.
6. The approximate quantity of alcohol intended to be produced per day of work and the quantity of raw material used to obtain it.

ART. 30. The directors of the revenue department shall send without delay two of the triplicates of the declaration spoken of in articles 27 and 28 to the first department of the general direction of customs and indirect contribution.

SEC. 1. As soon as the triplicate referred to shall be received in the first department this department, after ascertaining by suitable means that the raw material comprised in the declaration does not include anything prejudicial to public health, shall authorize in one of the triplicates the issue of the license required by article 38, and shall take the necessary measures for the installation for a requisite fiscal station.

SEC. 2. The triplicate with the authorization shall be returned to the director of the department of revenue, who shall send it at once to the revenue notary of the municipality or ward for the purposes designated in article 38.

ART. 31. The factories can not employ in distillation raw material not mentioned in the license, nor make any modification or change which involves an alteration in the essential part of the indications made in the declaration, unless express mention is made of this in the license itself.

For this purpose the owner or manager of the factory shall make an additional declaration, which shall follow the lines indicated in articles 27, 28, and 30.

Having in view the triplicate of the declaration the revenue notary shall note in the license, when it is presented to him, the new raw material to be used or the modifications and changes desired.

ART. 32. The declaration and the additional declaration referred to in the preceding article for an alteration or change in the distilling apparatus shall be sent with the design or print of these sets of apparatus and the plan of the building where they are or where they are going to be established.

Single section. The drawings or print and the plan above indicated shall accompany the triplicate sent to the first department of the general direction of customs and indirect contribution.

ART. 33. The factories or stills can not distill promiscuously alcohols and brandies subject to the production tax and such as are exempt therefrom.

Single section. The same factories or stills, however, may each perform distillation by themselves and in distinct periods, when allowed by the Government, after consulting with the general direction of customs and indirect contribution.

ART. 34. The entry of raw material for the factories and the exit

therefrom of alcohols and brandies must take place between sunrise and sunset.

Single section. The commissary, having in view the condition and the movement of the factories, may, however, consent, with previous authorization of the general direction of customs and indirect contribution, that the services designated in this article be performed also at night.

ART. 35. The manufacturer shall keep a book showing the general movement of the factory, authenticated by the commissary to whom the station established in the factory is subject. This book shall be conformable to model No. 5.

Single section. The manufacturer shall keep an account of the books up to date and present it to the authorities and employees charged with inspecting and supervising the factories whenever demanded by them.

ART. 36. The factories shall have a special inscription.

SEC. 1. The casks or vessels in which alcohols and brandies leave the factories shall be previously weighed, measured, and marked at both ends. The mark shall contain the following:

"Factory of ———. Supervision of the production tax; liters —— (or the number)."

SEC. 2. The provisions of this article do not concern vessels of a capacity less than 20 liters in which alcohols and brandies are sent out for consumption in the locality of the factories.

ART. 37. The operation of distillation is considered interrupted when the term of the license having expired it is not renewed.

CHAPTER IV.

CONCERNING LICENSES FOR THE OPERATION OF THE FACTORIES AND STILLS.

ART. 38. No factory shall work unless its owners provide themselves previously with a license for that purpose.

ART. 39. The time of the license can not in any case exceed one year.

Single section. The license may, however, be renewed when that term has expired.

ART. 40. The new license always necessitates the declaration set forth in article 27.

ART. 41. The license mentioned in article 38 shall be issued by the revenue notary of the ward or municipality by the terms and with the declaration of model No. 2.

ART. 42. The revenue notary, having received the triplicate of the declaration alluded to in section 2 of article 30, shall send the license as soon as it is requested by the respective persons interested. The license shall comprehend all the indications set forth by the triplicate of the declaration.

ART. 43. The directors of the department of revenue shall send requisition to the first department of the general direction of customs and indirect contribution for the printed blanks which they shall need for the service of the licenses, which shall be furnished to them in blocks of ten sheets.

Single section. The licenses shall be numbered and rubricated by the directors referred to. The numbering is a special one for each municipality or ward, having to begin and end within one civil year.

ART. 44. The licenses granted to the factory may be transferred so long as their time lasts—

(*a*) When their owners transfer the factory to others.

(*b*) In case of death or loss of proprietors.

PORTUGAL.

LAWS RELATING TO THE TAX ON DISTILLED SPIRITS.

WRIT OF LAW.

Don Carlos, by the grace of God, King of Portugal, and the two Algarves, etc., make known to all our subjects that the General Cortes have decreed and that we desire to enact the following law:

ARTICLE 1. The brandy and alcohol produced on the mainland of the Kingdom and in the adjacent islands, after the publication of this law are subject to the production tax of 50 reis per liter of liquid produced under the following terms:

SECTION 1. For the collection of this tax the whole, or at least two-thirds, of the number of the factories, adjacent islands, and the mainland at present in existence, and representing at least two-thirds of the total production of last year, shall constitute themselves into a corporation, the exercise of the industry of the distillation of alcohol within that corporation being duly regulated by the Government in harmony with the following provisions:

(*a*) The time to be fixed for the duration and continuance of the corporation of the factories shall not exceed five years.

(*b*) The corporation shall pay to the State for each one of the incorporated factories the sum of 2,000$000 reis as compensation for the expenses of supervision of the quantity and quality of the liquids produced; and the total of the compensation shall not be less than 10:000$000 reis.

(*c*) The corporation shall undertake the obligation to buy the sweet potatoes that are annually produced in the Azores and offered on the market on those islands in such condition as to admit of being distilled.

If it is officially ascertained that in any year, with the exception of the first, in which this law becomes operative, the alcohol of the corporation derived from the Azores which has paid the respective production tax is less in quantity than that produced in the same year by the incorporated factories of the Azores, the difference, or the stock that has not entered into consumption, shall be charged to the account of the following year for the purchase of sweet potatoes in the proportion of 8 kilograms of potatoes for every liter of alcohol. The agriculturists shall be suitably notified in the month of February, by means of public announcement, in order to regulate the arrangement to be made in their planting in accordance with this circumstance.

In any case—that is to say, both in those years in which the working men of the Azores have been notified to regulate the planting of potatoes in accordance with the consumption of alcohol and in those years in which those announcements have not to be made—the incorporated factories of the Azores shall not distill for alcohol anything but sweet potatoes so far as their raw material is found in the market of the island in such condition as to admit of being utilized for distillation.

The price which the incorporated factories shall have to pay for sweet potatoes shall be the maximum price that has been paid during the last three years for the largest quantity bought for the factory in each of these three last years; and for any excess that there may be the price

shall never be more than 20 per cent above the maximum cost previously indicated.

(*d*) The corporation shall oblige itself to buy annually from the agriculturists of Algarve the maximum quantity of figs and barob beans that have been bought during the last three years for distillation, and the selling price that the agriculturists may demand may amount to a maximum of 200 reis for every 15 kilograms of barob beans and 300 reis for an equal amount of figs.

(*e*) The corporation shall oblige itself to buy all the chief roots suitable for distillation cultivated on the mainland and offered on the market at the highest price of the last three years.

(*f*) Disputes that may arise between the agriculturists and the corporation of factories shall be decided on principles of equity by a commission composed of three members, the president being the judge having jurisdiction over the place where the agriculturist resides, one of the voters chosen by the corporation, and the other chosen by the agriculturist, and invited for this purpose to meet by the administrative authority of the municipality where the raw material to be distilled was produced.

(*g*) The Government shall guarantee to the corporation the maintenance of the import duty established in the new list, to wit:

Simple brandy and alcohol in cask or per decaliter of pure alcohol, 1$930 reis.

Simple brandy and alcohol in bottles, jugs, and similar vessels, per decaliter of liquid, 2$360 reis.

Alcoholic beverages not specified, per decaliter of liquid, 2$500 reis.

And it will also guarantee to the corporation the importation duties established in the new list as the maximum for all the raw material applicable in the country for the distillation of alcohol.

(*h*) The Government shall regulate the importation of foreign alcohol so as to avoid the formation of great quantities whenever the premium on exportation granted by foreign nations, or any other circumstance, shall permit this importation to be made at the price equal to or less than 253 reis per liter.

SEC. 2. The factories that are outside the corporation and those that are newly established are subject to the payment for the alcohol which they produce of a duty of 100 reis per liter of liquid used.

SEC. 3. The following are exempted from the payment of the production tax:

1. Brandy and alcohol derived from the distillation of wine, dregs of wine, and grape hulls, whether produced by the distiller himself or not.

2. Brandy and alcohols derived from the distillation of figs, medlars, arbute berries, and other fruits of home production, when made by means of simple stills of a capacity not exceeding 750 liters, whether produced by the distiller himself or not.

3. The brandy and alcohol derived from the distillation of sugar cane produced in the islands of Madeira, whether produced by the distiller himself or not.

SEC. 4. The brandy and alcohol produced in the factories or stills, whatever be the raw material distilled, shall be of good quality and shall be perfectly rectified and sufficiently pure. Transgressors of this regulation shall be punishable under the terms of the legal provision and of the regulation.

SEC. 5. The brandy and alcohol, of whatever derivation, shall be subject on the mainland of the Kingdom, furthermore, to the payment of the tax on consumption and sale (water tax) in the following form:

1. Brandy and alcohol, simple or prepared, in jugs, flasks, bottles, or

similar vessels, per liter of liquid: Introduced for consumption in Lisbon, 270 reis; sold for consumption in Oporto, 230 reis.

2. Simple brandy and alcohol in any other vessel, per liter of pure alcohol: Introduced for consumption in Lisbon, 270 reis; sold for consumption in Oporto, 230 reis.

3. Brandy and alcohol sold for consumption in the rest of the country, per liter of liquid, 70 reis.

In these taxes are included all the additional ones at present in force.

The brandy and alcohol produced in the adjacent islands and destined for local consumption in those islands continue exempt from the tax on sale (water tax).

SEC. 6. The brandy and alcohol produced in the adjacent islands which have not paid or which are not obliged to pay the production tax shall pay the duties whenever presented for shipment to any customs office of the mainland or the adjacent islands, as if it was foreign alcohol.

SEC. 7. Hereby is abolished the duty of 2 per cent ad valorem on brandy and alcohol destined for the improvement of wines created by the law of May 17, 1878, this duty having been replaced by a tax on exportation of five-tenths of a real per liter of wine exported through the custom-house of Oporto.

The customs line of Villa Nova de Gaia shall be abolished; the Government shall give the instructions necessary for the collection and supervision of the consumption tax and that of the water tax to be made in that locality under the terms of the general law.

ART. 4. The Government shall issue the regulation necessary for the execution of this law and also all those which relate to the hygiene, health, and conditions of work of the laborers employed in the factories, giving an account to the Cortes of the use made of the authorization conferred upon it by them.

ART. 5. The contrary legislation is repealed.

We therefore order all authorities to whom the knowledge and execution of the said law belong that they shall fulfill and keep it and cause it to be fulfilled and kept as completely as is the same set forth.

The minister and secretary of state of the interior shall cause it to be printed, published, and distributed.

Given in the palace on the 12th day of April, 1892.

The King with rubric and guard.

JOAQUIM PEDRO DE OLIVEIRA MARTINS.

[Place of the great seal of the Royal Arms.]

DECREE.

Using the authority granted to the Government by article 4 of the writ of law of April 12 of the current year, I deem it proper to approve the regulation concerning the production tax on alcohol and brandy produced on the mainland of the Kingdom and the adjacent islands, and which has been signed by the minister and secretary of state of the interior.

The president of the council of ministers, minister and secretary of state of affairs of the Kingdom, and the minister and secretary of state of the interior shall thus understand it and cause it to be executed.

Palace, on May 12, 1892.

JOSÉ DIAS FERREIRA.
JOAQUIM PEDRO DE OLIVEIRA MARTINS.

REGULATIONS CONCERNING THE PRODUCTION TAX ON ALCOHOLS AND BRANDY.

CHAPTER I.

GENERAL PROVISIONS.

ARTICLE 1. The brandy and alcohol produced on the mainland of the Kingdom and the adjacent islands are subject to the production tax modified by the law of April 12 of the present year.

Single section. The following are excepted from the provisions of this article:

1. The brandy and alcohol derived from the distillation of wine, lees of wine, and grape hulls which are of the distiller's own production, whether produced by the distiller himself or not.

2. The brandy and alcohol derived from the distillation of figs, medlars, arbute berries, and other fruits of home production, whether produced by the distiller himself or not, when performed in simple stills of a capacity not exceeding 750 liters.

3. Brandy and alcohol derived from the distillation of sugar cane produced on the island of Madeira, whether produced by the distiller himself or not.

ART. 2. The amount of production tax spoken of in the preceding article is 50 reis per liter of liquid produced.

Single section. The amount, however, shall be 100 reis for the product of factories that are outside of the associations spoken of in Chapter IX. That association shall be constituted under the terms of the law of April 12, 1882.

ART. 3. The factories that are established or may be established within the limits of the cities of Lisbon and Oporto shall be respectively subject to the consumption tax and the water tax for alcohols and brandies consumed within the said cities.

Single section. The same factories shall also be subject to the water tax for the alcohols and brandies which shall issue from them for consumption in the other municipalities of the Kingdom.

ART. 4. In conformity with the determination of the preceding article in the parts relating to the exaction of the taxes and imposts, the factories established in any municipalities of the country outside of Lisbon and Oporto shall be respectively obliged to make payment of the consumption tax or water tax to which the alcohols and brandies intended for consumption in Lisbon and the other municipalities of the Kingdom are subject.

ART. 5. For liquors and creams manufactured in Lisbon and Oporto as alcohols and brandies which have respectively paid the duties and imposts designated in articles 1 and 3 the consumption tax and water tax shall be abolished.

Single section. Similarly there shall be exempt from the consumption tax and the water tax the liquors and creams in any municipalities of the Kingdom outside those of Lisbon and Oporto manufactured with alcohols and brandies which have already paid the said duties and imposts.

CHAPTER II.

CONCERNING THE SUPERVISION OF THE TAX.

ART. 6. The superior administration of the production tax and the superintendence in its supervision belong to the general direction of customs of indirect contribution.

ART. 7. The service relating to the production tax on alcohols and brandies in the general direction of customs belongs to the first department, to which all the personnel charged with the supervision of the said impost shall be directly and immediately subordinated.

ART. 8. A table conformable to model No. 4 shall be sent by the director of the department of finance to the first department of the general direction of customs by the 20th day of the month immediately preceding the one to which it refers.

ART. 9. The first department of the general direction of customs and indirect contribution, by means of the table spoken of in the preceding article and by any other means which it may deem convenient to use, shall exercise the necessary supervision on the production tax.

ART. 10. In order to aid the chief of the first department of the general direction of customs in the fiscal service which is incumbent on him, he shall have five commissaries of alcohol, who shall have jurisdiction in the customs districts of Lisbon, Oporto, Ponta Delgada, Angra, and Funchal.

ART. 11. It is incumbent on the commissaries directing the service in every circumscription to watch over the manner in which the provisions of the regulations, the orders of the Government, and the orders of the general direction of customs are fulfilled which relate to the enactment of the writ of law of April 12 of the current year, both as regards the supervision and on the parts of the manufacturers, and also to fulfill the order which may have been given to them by their superiors.

Single section. The commissaries, although the enactment of the preceding article is specially incumbent on them, can not exempt themselves from any other fiscal service of the indirect contribution proper to their office with which they may have been charged by the general direction of customs.

ART. 12. The commissaries shall be selected out of the personnel joined to the general direction of customs and indirect contribution, and they shall receive the salaries to which they are entitled as such.

ART. 13. Near every distillery there shall be a fiscal station composed of 1 chief of station, and 3 fiscal guards.

SECTION 1. The personnel of these stations shall be appointed out of the personnel of the list of the fiscal guard, and if there are any employees that were on the force of the extinct fiscal police these shall be appointed for such functions.

SEC. 2. The fiscal station shall have under its charge—

1. To make entries in the books of models Nos. 5 and 6.

2. To assess on the first day of every month the production tax, and the consumption tax and the water tax, which are to be paid with it.

3. To send to the respective revenue notary, on the day indicated in No. 2, the table of assessment referred to in article 53.

4. To proceed to the verification of the quality of the alcohol and to undertake any visits and inspection which relate to such verification.

5. To draw up a protocol in the manner of model No. 10.

6. To ascertain whether the factories have provided themselves with the proper license, not allowing their operations so long as the license has been presented.

7. Not to allow any raw material to enter the factories which has not been mentioned in the licenses.

8. To seize any alcohol or brandy that has been withdrawn from the production tax and other duties and imposts that are to be paid with it, making suitable report for the imposition of fines.

9. To employ in general all the means conducive to avoid the perpetration of fraud prejudicial to the revenue or to public health, and any infraction of these regulations that has not been punished.

SEC. 4. The services mentioned in Nos. 6 to 10 of section 1 shall be performed—

(*a*) In municipalities where there exists the fiscal station near the factories by the personnel of each station.

(*b*) In the other municipalities of the Kingdom by the personnel of supervision in the service of the water tax.

SEC. 5. In the municipalities in which there is more than one fiscal station the service of the preceding paragraph shall be performed by all the stations in rotation.

SEC. 6. For the purposes of No. 4, of section 1 of this article, the commissaries of alcohol shall inform themselves, in the laboratory annexed to the technical tribunal of litigation, in the processes which, under the terms of the respective instruction, they have to employ in order to verify the purity of the alcohol.

SEC. 7. The personnel of the fiscal station may be altered or modified in number and quality as circumstances and the needs of the service may require.

ART. 14. The fiscal station shall be placed near the door serving as entrance and exit to the factory in a dwelling furnished by the factory.

ART. 15. When in any city, town, or place there exists different factories, all or some of them of little importance, a single fiscal station with a larger number of fiscal guards may perform the service of all.

ART. 16. In case of the preceding article the head porters of the fiscal station shall be in the factory which has the largest operation from which the personnel necessary for the service of the other shall be detached, there being always in each one of them a fiscal employee to aid and replace, in the duty of keeping accounts, the chief of the station.

Single section. The keeping of account shall be directed and performed under the responsibility of the chief of the station.

ART. 17. In case of temporary interruption of work of distillation, owing to lack of raw material or any other casual circumstance, the parts of the personnel of supervision that may be dispensed with may be employed in other fiscal service.

ART. 18. When the work of a factory stops its owners shall send the requisite information to the chief of the fiscal station, who shall send it at once to the respective commissary, and the latter to the first department of the general direction of customs.

Single section. In the case referred to in this article the entire supervision shall be withdrawn only when within the factories there shall remain no quantity of alcohol, or when an inventory of the remaining alcohol having been made its owner guarantees the payment of the impost due.

ART. 19. Every outer door of the factory in which no overseer resides, and which is to be locked at the close of the work of the day, shall have two locks with different keys.

Single section. One of the locks shall be placed by the Government and its key shall be in the keeping of the chief of the fiscal station, and none of the doors shall be opened or locked except in the presence of the chief or of the functionary who replaces him, who shall punctually appear at the designated hour for that purpose.

ART. 20. The distilling factories shall furnish the fiscal station stamped balances of sufficient strength and solidity and all the weights

and other instruments necessary for the verification of the quality and quantity of the alcohols produced by them.

SECTION 1. All these instruments and others which may be indicated in special regulation as necessary for determining the capacity of the vessels shall be previously stamped and shall be in the keeping of the fiscal station.

SEC. 2. These stamps shall be made by comparison with standard measures and instruments which shall be cut for that purpose by the general direction of customs.

CHAPTER III.

CONCERNING THE DISTILLATION OF ALCOHOLS AND BRANDIES.

ART. 21. The Government shall cause to be placed in every one of the factories, in a suitable place, counting devices which shall measure either the liquids subject to distillation or the product distilled, or the liquids to be distilled and the distilled products.

Single section. The counting devices may indicate, besides the quantity, the alcoholic strength of the liquid which issues through the distilling apparatus.

ART. 22. In the first case of the preceding article each decaliter of liquid to be distilled shall have the equivalent in pure alcohol that may be determined in special instruction.

ART. 23. All the expense of purchase and setting up of the counting devices shall be at the charge of the factories.

ART. 24. The distilling factories which in the future may be established, or those now in existence, when they are modified or extended, shall be constructed under a fiscal plan in such way that the building shall be surrounded by a wall 3 meters high and 0.50 meter thick, with a single door for the service of entrance and exit. The distance between the outside of the building of the factory and the wall shall not be greater than 15 meters or less than 5.

Single section. The tubing and communications between the different sets of apparatus shall be exposed and readily accessible to the inspection by the fiscal agent.

ART. 25. The factories now in existence shall, within the space of six months, execute the order contained in the single section of the preceding article. The other provisions of the same article shall be applicable to them only when, the work having stopped, they resume it after the expiration of at least one year, saving the provision of the single section of article 90.

ART. 26. The license referred to in the decree of October 21, 1863, shall not be granted in order that new distilling factories may be established in buildings which do not fulfill the condition designated in article 24 of these regulations.

ART. 27. Individuals who, after the publication of these regulations, shall desire to establish factories for alcohol and brandy, or who desire to continue distillation already begun and interrupted for any reason, license for which has been terminated, shall make declaration conformable to model No. 1, which they shall submit thirty days before beginning the work to the revenue inspector of the district.

Single section. These declarations shall be made in triplicate, and in one of them the requisite receipts shall be entered.

ART. 28. In regard to the factories and stills already in existence and which shall be in operation from the date of publication of these regu-

PORTUGAL.

LAWS RELATING TO THE TAX ON DISTILLED SPIRITS.

WRIT OF LAW.

Don Carlos, by the grace of God, King of Portugal, and the two Algarves, etc., make known to all our subjects that the General Cortes have decreed and that we desire to enact the following law:

ARTICLE 1. The brandy and alcohol produced on the mainland of the Kingdom and in the adjacent islands, after the publication of this law are subject to the production tax of 50 reis per liter of liquid produced under the following terms:

SECTION 1. For the collection of this tax the whole, or at least two-thirds, of the number of the factories, adjacent islands, and the mainland at present in existence, and representing at least two-thirds of the total production of last year, shall constitute themselves into a corporation, the exercise of the industry of the distillation of alcohol within that corporation being duly regulated by the Government in harmony with the following provisions:

(*a*) The time to be fixed for the duration and continuance of the corporation of the factories shall not exceed five years.

(*b*) The corporation shall pay to the State for each one of the incorporated factories the sum of 2,000$000 reis as compensation for the expenses of supervision of the quantity and quality of the liquids produced; and the total of the compensation shall not be less than 10:000$000 reis.

(*c*) The corporation shall undertake the obligation to buy the sweet potatoes that are annually produced in the Azores and offered on the market on those islands in such condition as to admit of being distilled.

If it is officially ascertained that in any year, with the exception of the first, in which this law becomes operative, the alcohol of the corporation derived from the Azores which has paid the respective production tax is less in quantity than that produced in the same year by the incorporated factories of the Azores, the difference, or the stock that has not entered into consumption, shall be charged to the account of the following year for the purchase of sweet potatoes in the proportion of 8 kilograms of potatoes for every liter of alcohol. The agriculturists shall be suitably notified in the month of February, by means of public announcement, in order to regulate the arrangement to be made in their planting in accordance with this circumstance.

In any case—that is to say, both in those years in which the working men of the Azores have been notified to regulate the planting of potatoes in accordance with the consumption of alcohol and in those years in which those announcements have not to be made—the incorporated factories of the Azores shall not distill for alcohol anything but sweet potatoes so far as their raw material is found in the market of the island in such condition as to admit of being utilized for distillation.

The price which the incorporated factories shall have to pay for sweet potatoes shall be the maximum price that has been paid during the last three years for the largest quantity bought for the factory in each of these three last years; and for any excess that there may be the price

shall never be more than 20 per cent above the maximum cost previously indicated.

(*d*) The corporation shall oblige itself to buy annually from the agriculturists of Algarve the maximum quantity of figs and barob beans that have been bought during the last three years for distillation, and the selling price that the agriculturists may demand may amount to a maximum of 200 reis for every 15 kilograms of barob beans and 300 reis for an equal amount of figs.

(*e*) The corporation shall oblige itself to buy all the chief roots suitable for distillation cultivated on the mainland and offered on the market at the highest price of the last three years.

(*f*) Disputes that may arise between the agriculturists and the corporation of factories shall be decided on principles of equity by a commission composed of three members, the president being the judge having jurisdiction over the place where the agriculturist resides, one of the voters chosen by the corporation, and the other chosen by the agriculturist, and invited for this purpose to meet by the administrative authority of the municipality where the raw material to be distilled was produced.

(*g*) The Government shall guarantee to the corporation the maintenance of the import duty established in the new list, to wit:

Simple brandy and alcohol in cask or per decaliter of pure alcohol, 1$930 reis.

Simple brandy and alcohol in bottles, jugs, and similar vessels, per decaliter of liquid, 2$360 reis.

Alcoholic beverages not specified, per decaliter of liquid, 2$500 reis.

And it will also guarantee to the corporation the importation duties established in the new list as the maximum for all the raw material applicable in the country for the distillation of alcohol.

(*h*) The Government shall regulate the importation of foreign alcohol so as to avoid the formation of great quantities whenever the premium on exportation granted by foreign nations, or any other circumstance, shall permit this importation to be made at the price equal to or less than 253 reis per liter.

SEC. 2. The factories that are outside the corporation and those that are newly established are subject to the payment for the alcohol which they produce of a duty of 100 reis per liter of liquid used.

SEC. 3. The following are exempted from the payment of the production tax:

1. Brandy and alcohol derived from the distillation of wine, dregs of wine, and grape hulls, whether produced by the distiller himself or not.

2. Brandy and alcohols derived from the distillation of figs, medlars, arbute berries, and other fruits of home production, when made by means of simple stills of a capacity not exceeding 750 liters, whether produced by the distiller himself or not.

3. The brandy and alcohol derived from the distillation of sugar cane produced in the islands of Madeira, whether produced by the distiller himself or not.

SEC. 4. The brandy and alcohol produced in the factories or stills, whatever be the raw material distilled, shall be of good quality and shall be perfectly rectified and sufficiently pure. Transgressors of this regulation shall be punishable under the terms of the legal provision and of the regulation.

SEC. 5. The brandy and alcohol, of whatever derivation, shall be subject on the mainland of the Kingdom, furthermore, to the payment of the tax on consumption and sale (water tax) in the following form:

1. Brandy and alcohol, simple or prepared, in jugs, flasks, bottles, or

similar vessels, per liter of liquid: Introduced for consumption in Lisbon, 270 reis; sold for consumption in Oporto, 230 reis.

2. Simple brandy and alcohol in any other vessel, per liter of pure alcohol: Introduced for consumption in Lisbon, 270 reis; sold for consumption in Oporto, 230 reis.

3. Brandy and alcohol sold for consumption in the rest of the country, per liter of liquid, 70 reis.

In these taxes are included all the additional ones at present in force.

The brandy and alcohol produced in the adjacent islands and destined for local consumption in those islands continue exempt from the tax on sale (water tax).

SEC. 6. The brandy and alcohol produced in the adjacent islands which have not paid or which are not obliged to pay the production tax shall pay the duties whenever presented for shipment to any customs office of the mainland or the adjacent islands, as if it was foreign alcohol.

SEC. 7. Hereby is abolished the duty of 2 per cent ad valorem on brandy and alcohol destined for the improvement of wines created by the law of May 17, 1878, this duty having been replaced by a tax on exportation of five-tenths of a real per liter of wine exported through the custom-house of Oporto.

The customs line of Villa Nova de Gaia shall be abolished; the Government shall give the instructions necessary for the collection and supervision of the consumption tax and that of the water tax to be made in that locality under the terms of the general law.

ART. 4. The Government shall issue the regulation necessary for the execution of this law and also all those which relate to the hygiene, health, and conditions of work of the laborers employed in the factories, giving an account to the Cortes of the use made of the authorization conferred upon it by them.

ART. 5. The contrary legislation is repealed.

We therefore order all authorities to whom the knowledge and execution of the said law belong that they shall fulfill and keep it and cause it to be fulfilled and kept as completely as is the same set forth.

The minister and secretary of state of the interior shall cause it to be printed, published, and distributed.

Given in the palace on the 12th day of April, 1892.

The King with rubric and guard.

JOAQUIM PEDRO DE OLIVEIRA MARTINS.

[Place of the great seal of the Royal Arms.]

DECREE.

Using the authority granted to the Government by article 4 of the writ of law of April 12 of the current year, I deem it proper to approve the regulation concerning the production tax on alcohol and brandy produced on the mainland of the Kingdom and the adjacent islands, and which has been signed by the minister and secretary of state of the interior.

The president of the council of ministers, minister and secretary of state of affairs of the Kingdom, and the minister and secretary of state of the interior shall thus understand it and cause it to be executed.

Palace, on May 12, 1892.

JOSÉ DIAS FERREIRA.
JOAQUIM PEDRO DE OLIVEIRA MARTINS.

REGULATIONS CONCERNING THE PRODUCTION TAX ON ALCOHOLS AND BRANDY.

CHAPTER I.

GENERAL PROVISIONS.

ARTICLE 1. The brandy and alcohol produced on the mainland of the Kingdom and the adjacent islands are subject to the production tax modified by the law of April 12 of the present year.

Single section. The following are excepted from the provisions of this article:

1. The brandy and alcohol derived from the distillation of wine, lees of wine, and grape hulls which are of the distiller's own production, whether produced by the distiller himself or not.

2. The brandy and alcohol derived from the distillation of figs, medlars, arbute berries, and other fruits of home production, whether produced by the distiller himself or not, when performed in simple stills of a capacity not exceeding 750 liters.

3. Brandy and alcohol derived from the distillation of sugar cane produced on the island of Madeira, whether produced by the distiller himself or not.

ART. 2. The amount of production tax spoken of in the preceding article is 50 reis per liter of liquid produced.

Single section. The amount, however, shall be 100 reis for the product of factories that are outside of the associations spoken of in Chapter IX. That association shall be constituted under the terms of the law of April 12, 1882.

ART. 3. The factories that are established or may be established within the limits of the cities of Lisbon and Oporto shall be respectively subject to the consumption tax and the water tax for alcohols and brandies consumed within the said cities.

Single section. The same factories shall also be subject to the water tax for the alcohols and brandies which shall issue from them for consumption in the other municipalities of the Kingdom.

ART. 4. In conformity with the determination of the preceding article in the parts relating to the exaction of the taxes and imposts, the factories established in any municipalities of the country outside of Lisbon and Oporto shall be respectively obliged to make payment of the consumption tax or water tax to which the alcohols and brandies intended for consumption in Lisbon and the other municipalities of the Kingdom are subject.

ART. 5. For liquors and creams manufactured in Lisbon and Oporto as alcohols and brandies which have respectively paid the duties and imposts designated in articles 1 and 3 the consumption tax and water tax shall be abolished.

Single section. Similarly there shall be exempt from the consumption tax and the water tax the liquors and creams in any municipalities of the Kingdom outside those of Lisbon and Oporto manufactured with alcohols and brandies which have already paid the said duties and imposts.

CHAPTER II.

CONCERNING THE SUPERVISION OF THE TAX.

ART. 6. The superior administration of the production tax and the superintendence in its supervision belong to the general direction of *customs* of indirect contribution.

ART. 7. The service relating to the production tax on alcohols and brandies in the general direction of customs belongs to the first department, to which all the personnel charged with the supervision of the said impost shall be directly and immediately subordinated.

ART. 8. A table conformable to model No. 4 shall be sent by the director of the department of finance to the first department of the general direction of customs by the 20th day of the month immediately preceding the one to which it refers.

ART. 9. The first department of the general direction of customs and indirect contribution, by means of the table spoken of in the preceding article and by any other means which it may deem convenient to use, shall exercise the necessary supervision on the production tax.

ART. 10. In order to aid the chief of the first department of the general direction of customs in the fiscal service which is incumbent on him, he shall have five commissaries of alcohol, who shall have jurisdiction in the customs districts of Lisbon, Oporto, Ponta Delgada, Angra, and Funchal.

ART. 11. It is incumbent on the commissaries directing the service in every circumscription to watch over the manner in which the provisions of the regulations, the orders of the Government, and the orders of the general direction of customs are fulfilled which relate to the enactment of the writ of law of April 12 of the current year, both as regards the supervision and on the parts of the manufacturers, and also to fulfill the order which may have been given to them by their superiors.

Single section. The commissaries, although the enactment of the preceding article is specially incumbent on them, can not exempt themselves from any other fiscal service of the indirect contribution proper to their office with which they may have been charged by the general direction of customs.

ART. 12. The commissaries shall be selected out of the personnel joined to the general direction of customs and indirect contribution, and they shall receive the salaries to which they are entitled as such.

ART. 13. Near every distillery there shall be a fiscal station composed of 1 chief of station, and 3 fiscal guards.

SECTION 1. The personnel of these stations shall be appointed out of the personnel of the list of the fiscal guard, and if there are any employees that were on the force of the extinct fiscal police these shall be appointed for such functions.

SEC. 2. The fiscal station shall have under its charge—

1. To make entries in the books of models Nos. 5 and 6.

2. To assess on the first day of every month the production tax, and the consumption tax and the water tax, which are to be paid with it.

3. To send to the respective revenue notary, on the day indicated in No. 2, the table of assessment referred to in article 53.

4. To proceed to the verification of the quality of the alcohol and to undertake any visits and inspection which relate to such verification.

5. To draw up a protocol in the manner of model No. 10.

6. To ascertain whether the factories have provided themselves with the proper license, not allowing their operations so long as the license has been presented.

7. Not to allow any raw material to enter the factories which has not been mentioned in the licenses.

8. To seize any alcohol or brandy that has been withdrawn from the production tax and other duties and imposts that are to be paid with it, making suitable report for the imposition of fines.

9. To employ in general all the means conducive to avoid the perpetration of fraud prejudicial to the revenue or to public health, and any infraction of these regulations that has not been punished.

SEC. 4. The services mentioned in Nos. 6 to 10 of section 1 shall be performed—

(*a*) In municipalities where there exists the fiscal station near the factories by the personnel of each station.

(*b*) In the other municipalities of the Kingdom by the personnel of supervision in the service of the water tax.

SEC. 5. In the municipalities in which there is more than one fiscal station the service of the preceding paragraph shall be performed by all the stations in rotation.

SEC. 6. For the purposes of No. 4, of section 1 of this article, the commissaries of alcohol shall inform themselves, in the laboratory annexed to the technical tribunal of litigation, in the processes which, under the terms of the respective instruction, they have to employ in order to verify the purity of the alcohol.

SEC. 7. The personnel of the fiscal station may be altered or modified in number and quality as circumstances and the needs of the service may require.

ART. 14. The fiscal station shall be placed near the door serving as entrance and exit to the factory in a dwelling furnished by the factory.

ART. 15. When in any city, town, or place there exists different factories, all or some of them of little importance, a single fiscal station with a larger number of fiscal guards may perform the service of all.

ART. 16. In case of the preceding article the head porters of the fiscal station shall be in the factory which has the largest operation from which the personnel necessary for the service of the other shall be detached, there being always in each one of them a fiscal employee to aid and replace, in the duty of keeping accounts, the chief of the station.

Single section. The keeping of account shall be directed and performed under the responsibility of the chief of the station.

ART. 17. In case of temporary interruption of work of distillation, owing to lack of raw material or any other casual circumstance, the parts of the personnel of supervision that may be dispensed with may be employed in other fiscal service.

ART. 18. When the work of a factory stops its owners shall send the requisite information to the chief of the fiscal station, who shall send it at once to the respective commissary, and the latter to the first department of the general direction of customs.

Single section. In the case referred to in this article the entire supervision shall be withdrawn only when within the factories there shall remain no quantity of alcohol, or when an inventory of the remaining alcohol having been made its owner guarantees the payment of the impost due.

ART. 19. Every outer door of the factory in which no overseer resides, and which is to be locked at the close of the work of the day, shall have two locks with different keys.

Single section. One of the locks shall be placed by the Government and its key shall be in the keeping of the chief of the fiscal station, and none of the doors shall be opened or locked except in the presence of the chief or of the functionary who replaces him, who shall punctually appear at the designated hour for that purpose.

ART. 20. The distilling factories shall furnish the fiscal station stamped balances of sufficient strength and solidity and all the weights

and other instruments necessary for the verification of the quality and quantity of the alcohols produced by them.

SECTION 1. All these instruments and others which may be indicated in special regulation as necessary for determining the capacity of the vessels shall be previously stamped and shall be in the keeping of the fiscal station.

SEC. 2. These stamps shall be made by comparison with standard measures and instruments which shall be cut for that purpose by the general direction of customs.

CHAPTER III.

CONCERNING THE DISTILLATION OF ALCOHOLS AND BRANDIES.

ART. 21. The Government shall cause to be placed in every one of the factories, in a suitable place, counting devices which shall measure either the liquids subject to distillation or the product distilled, or the liquids to be distilled and the distilled products.

Single section. The counting devices may indicate, besides the quantity, the alcoholic strength of the liquid which issues through the distilling apparatus.

ART. 22. In the first case of the preceding article each decaliter of liquid to be distilled shall have the equivalent in pure alcohol that may be determined in special instruction.

ART. 23. All the expense of purchase and setting up of the counting devices shall be at the charge of the factories.

ART. 24. The distilling factories which in the future may be established, or those now in existence, when they are modified or extended, shall be constructed under a fiscal plan in such way that the building shall be surrounded by a wall 3 meters high and 0.50 meter thick, with a single door for the service of entrance and exit. The distance between the outside of the building of the factory and the wall shall not be greater than 15 meters or less than 5.

Single section. The tubing and communications between the different sets of apparatus shall be exposed and readily accessible to the inspection by the fiscal agent.

ART. 25. The factories now in existence shall, within the space of six months, execute the order contained in the single section of the preceding article. The other provisions of the same article shall be applicable to them only when, the work having stopped, they resume it after the expiration of at least one year, saving the provision of the single section of article 90.

ART. 26. The license referred to in the decree of October 21, 1863, shall not be granted in order that new distilling factories may be established in buildings which do not fulfill the condition designated in article 24 of these regulations.

ART. 27. Individuals who, after the publication of these regulations, shall desire to establish factories for alcohol and brandy, or who desire to continue distillation already begun and interrupted for any reason, license for which has been terminated, shall make declaration conformable to model No. 1, which they shall submit thirty days before beginning the work to the revenue inspector of the district.

Single section. These declarations shall be made in triplicate, and in one of them the requisite receipts shall be entered.

ART. 28. In regard to the factories and stills already in existence and which shall be in operation from the date of publication of these regu-

lations, their owners shall make a declaration like those of model No. 1, which shall be required for the directors of the department of revenue within thirty days, counting from the one on which the same regulation shall begin to be operative.

ART. 29. The declaration to which articles 27 and 29 refer shall be satisfactory in the following respects:

1. Locality where the factory is to be established.
2. The nomination of the factories.
3. Name and residence of the owner or manager.
4. Designation of the distilling and rectifying apparatus, system, capacity of the boilers, and name of the maker
5. Raw material which is used or to be used in the distillation, and the mode of procedure.
6. The approximate quantity of alcohol intended to be produced per day of work and the quantity of raw material used to obtain it.

ART. 30. The directors of the revenue department shall send without delay two of the triplicates of the declaration spoken of in articles 27 and 28 to the first department of the general direction of customs and indirect contribution.

SEC. 1. As soon as the triplicate referred to shall be received in the first department this department, after ascertaining by suitable means that the raw material comprised in the declaration does not include anything prejudicial to public health, shall authorize in one of the triplicates the issue of the license required by article 38, and shall take the necessary measures for the installation for a requisite fiscal station.

SEC. 2. The triplicate with the authorization shall be returned to the director of the department of revenue, who shall send it at once to the revenue notary of the municipality or ward for the purposes designated in article 38.

ART. 31. The factories can not employ in distillation raw material not mentioned in the license, nor make any modification or change which involves an alteration in the essential part of the indications made in the declaration, unless express mention is made of this in the license itself.

For this purpose the owner or manager of the factory shall make an additional declaration, which shall follow the lines indicated in articles 27, 28, and 30.

Having in view the triplicate of the declaration the revenue notary shall note in the license, when it is presented to him, the new raw material to be used or the modifications and changes desired.

ART. 32. The declaration and the additional declaration referred to in the preceding article for an alteration or change in the distilling apparatus shall be sent with the design or print of these sets of apparatus and the plan of the building where they are or where they are going to be established.

Single section. The drawings or print and the plan above indicated shall accompany the triplicate sent to the first department of the general direction of customs and indirect contribution.

ART. 33. The factories or stills can not distill promiscuously alcohols and brandies subject to the production tax and such as are exempt therefrom.

Single section. The same factories or stills, however, may each perform distillation by themselves and in distinct periods, when allowed by the Government, after consulting with the general direction of customs and indirect contribution.

ART. 34. The entry of raw material for the factories and the exit

therefrom of alcohols and brandies must take place between sunrise and sunset.

Single section. The commissary, having in view the condition and the movement of the factories, may, however, consent, with previous authorization of the general direction of customs and indirect contribution, that the services designated in this article be performed also at night.

ART. 35. The manufacturer shall keep a book showing the general movement of the factory, authenticated by the commissary to whom the station established in the factory is subject. This book shall be conformable to model No. 5.

Single section. The manufacturer shall keep an account of the books up to date and present it to the authorities and employees charged with inspecting and supervising the factories whenever demanded by them.

ART. 36. The factories shall have a special inscription.

SEC. 1. The casks or vessels in which alcohols and brandies leave the factories shall be previously weighed, measured, and marked at both ends. The mark shall contain the following:

"Factory of ———. Supervision of the production tax; liters —— (or the number)."

SEC. 2. The provisions of this article do not concern vessels of a capacity less than 20 liters in which alcohols and brandies are sent out for consumption in the locality of the factories.

ART. 37. The operation of distillation is considered interrupted when the term of the license having expired it is not renewed.

CHAPTER IV.

CONCERNING LICENSES FOR THE OPERATION OF THE FACTORIES AND STILLS.

ART. 38. No factory shall work unless its owners provide themselves previously with a license for that purpose.

ART. 39. The time of the license can not in any case exceed one year.

Single section. The license may, however, be renewed when that term has expired.

ART. 40. The new license always necessitates the declaration set forth in article 27.

ART. 41. The license mentioned in article 38 shall be issued by the revenue notary of the ward or municipality by the terms and with the declaration of model No. 2.

ART. 42. The revenue notary, having received the triplicate of the declaration alluded to in section 2 of article 30, shall send the license as soon as it is requested by the respective persons interested. The license shall comprehend all the indications set forth by the triplicate of the declaration.

ART. 43. The directors of the department of revenue shall send requisition to the first department of the general direction of customs and indirect contribution for the printed blanks which they shall need for the service of the licenses, which shall be furnished to them in blocks of ten sheets.

Single section. The licenses shall be numbered and rubricated by the directors referred to. The numbering is a special one for each municipality or ward, having to begin and end within one civil year.

ART. 44. The licenses granted to the factory may be transferred so long as their time lasts—

(*a*) When their owners transfer the factory to others.

(*b*) In case of death or loss of proprietors.

(*c*) When they cease to work in one locality in order to establish themselves in another of the same municipality.

Single section. In such cases each one of the licenses shall be presented to the revenue notary for the entry transfer to the new proprietors to the heir of the deceased or to the new localities. The entry shall only be made after the revenue notary has received the triplicate of the declaration in which the transfer is authorized.

ART. 45. In the revenue department of the municipalities or wards there shall be kept a register of all the licenses that are issued for the operation of the distilling factories. The stubs of the licenses shall serve as a register, which shall be kept in the books to which they shall belong.

Single section. Any license which is spoiled shall be affixed to the stub, with the declaration "spoiled," and in case it has been separated therefrom it must be affixed to it again by gluing.

ART. 46. Of all the licenses issued in every month the directors of the revenue department shall send in the beginning of the following month to the general director of customs and indirect contribution, a report according to model No. 3.

Single section. In order to enable the directors of the department of finance to comply with the provision of this article the revenue notary shall send to them a report of the same model, making therein the necessary substitution.

CHAPTER V.

CONCERNING THE ASSESSMENT OF THE PRODUCTION TAX.

ART. 47. The assessment of the production tax is made in accordance with the preceding month, on the first day of the following month, in view of the account of the book, model No. 5.

ART. 48. On the first page of the book mentioned in the preceding article there shall be entered the quantity produced in alcohol and brandy, indicated by the counting devices, according to the provisions of articles 7 and 9. On the second page of the same book there shall be entered the quantity that has gone out of the factory, with the designation of its destination, all in accordance with example given in the respective model.

ART. 49. The quantity of alcohol and brandy produced and sent out of the factories having been verified according to the respective account, the chief of the fiscal station shall proceed to the assessment of the customs tax to be paid for the quantity of liquid sent out, which he shall obtain from the book, model No. 6.

In the presence of this book he shall draw up a table conformable to model No. 7, which he shall send on the day mentioned in article 47 to the revenue notary of the respective municipality or ward, indicating to the owner or manager of the factory that he is to satisfy within three days the tax which he owes.

Single section. With the table, model No. 7, the chief of the station shall also send a note of the expenses incurred by the personnel of the station in order to enable the revenue notary to fill out the table which he has to send to the director of the department of revenue.

ART. 50. Together with the production tax the following shall be assessed:

(*a*) The consumption tax due for alcohol and brandy which are sent out of the factories for consumption in Lisbon.

(*b*) The water tax due on alcohols and brandies which shall be sent out of the factories for consumption in the other municipalities of the Kingdom.

ART. 51. Appeal from the assessment spoken of in the preceding article may be made without suspensive effect to the general director of customs and indirect contribution. The request for appeal, provided with all the documents which the persons interested may deem it proper to bring forward, shall, within the space of eight days counting from the date of notification spoken of in article 49, be sent by the persons interested to the respective revenue notary, who shall send it to the director of the proper revenue department, in order that the latter may transmit it to the first department of the general director of customs and indirect contribution.

CHAPTER VI.

CONCERNING THE COLLECTION OF THE TAX.

ART. 52. The payment of the production tax shall be made in the competent receiver's office by means of a permit requested by the owner or manager of the factory or by deposit with the revenue notary within time marked in article 49.

ART. 53. Together with the tax spoken of in the preceding article there shall also be collected the consumption tax and the water tax which have been assessed under the terms of article 50.

ART. 54. In view of the assessment spoken of in article 49 the permit of payment shall be issued according to model No. 8.

ART. 55. The permit having been returned to the revenue notary with the note of payment, the fact shall be noted in the respective assessment; and thereupon the same notary shall make out the proper receipt, which, having been signed by him and by the receiver, shall be turned over to the person interested.

ART. 56. The revenue notary shall send, by the eighth day of every month, to the respective director of the revenue department of the district, a table drawn up conformably to model No. 4, excluding column No. 1, and substituting the words "district" for "municipality," and "revenue inspector" for "revenue notary."

Single section. From all the tables which he has received the director of the revenue department shall make up the table referred to in article 8, to which he shall give the destination indicated in the same article.

ART. 57. All the receipts from the production tax and those from the consumption tax and water tax collected with it are considered eventual.

ART. 58. If at the end of the three days referred to in articles 49 and 52 it appears that the tax has not been paid by means of the presentation of the receipts at the competent fiscal station, no quantity of alcohol shall be allowed to go out of the factory or deposit.

Single section. This penalty shall cease as soon as the payment of the tax has been proved.

ART. 59. The alcohol and brandy which, under the terms of the law of April 12, 1892, has not paid or is not subject to the production tax, is obliged to pay the tax of importation as the foreign article at the custom-houses of the mainland of the Kingdom and adjacent islands—

(*a*) If produced in the district of the mainland of the Kingdom, when entering in any one of the islands;

(*b*) If produced in the district of the Azores, when entering on the mainland or in the district of Funchal; and

(*c*) If produced in the district of Funchal, when entering the mainland or district of the Azores.

CHAPTER VII.

CONCERNING THE EXEMPTION GRANTED FOR RAW MATERIAL EMPLOYED IN DISTILLATION.

ART. 60. The raw material which the factories established within the territory of Lisbon and Oporto shall employ in the distillation of alcohol and brandies subject to the production tax or exempt from the consumption tax.

ART. 61. The exemption spoken of in the preceding article is to be made while observing the provisions of the following article.

ART. 62. The raw material subject to the consumption tax to which, under the terms of the preceding article, the exemption from these taxes has been granted, having been presented in the fiscal house of entry, the owner shall declare in writing the quantity and quality thereof and the factory to which it is going, requesting a fiscal agent to accompany it to the locality of destination.

ART. 63. The raw material having been found to agree with the statement of the declaration, the person in charge of the fiscal house shall make mention to that effect in the declaration, and give a permit of entry without payment of consumption tax, causing it to be accompanied by a fiscal agent to the factory for which it is destined.

ART. 64. Together with the raw material and in the keeping of the employee who is to accompany him there shall also be sent the declaration spoken of in the preceding article, which shall be handed to the chief of the fiscal station at the factory.

ART. 65. The chief of the fiscal station of the factory, making the same verification as that stated in article 63, shall return the declaration in case it is not found to be conformable, noting the circumstance that the raw material referred to in the declaration has entered into the factory.

Single section. The declaration shall be filed in the fiscal house as a State guard for the respective person in charge.

ART. 66. If the material described in the declaration does not agree with it, showing differences either in quality or in quantity more or less, the chief of the fiscal house shall proceed conformably with the provisions for alcohol and brandy in No. 8 of section 1 of article 13, and in article 73, transmitting the declaration with the requisite information to the respective authority.

CHAPTER VIII.

CONCERNING THE VERIFICATION OF THE PURITY OF THE ALCOHOL.

ART. 67. The brandy and alcohol produced in the factories and stills of a capacity exceeding 750 liters, whatever be the raw material employed in the distillation, shall be of good quality, perfectly rectified and sufficiently pure.

Single section. The service of verification of the purity of the alcohol is intrusted in every factory to the respective chief of the station, who shall proceed according to the instruction received from his superior.

ART. 68. The verification of the purity of the alcohol and brandies may be made—

(*a*) In the distilling factories.

(*b*) In deposits and magazines.

(*c*) In the customs offices.

(*d*) In the laboratory annexed to the technical legal tribunal.

Single section. Special instruction shall indicate through the respective fiscal agent the mode of ascertaining whether the alcohols and brandies satisfy the condition required by article 67, it being very expressly declared that the provision of the same paragraph shall be applicable to ascertain, outside of the factory, which shall be in the condition set forth in the first part of the single section of article 79.

ART. 69. Any dispute that may arise concerning the purity of alcohols between the factories and the fiscal agent shall be decided in the last instance by the general direction of customs, having previously given a hearing to the respective reporter of the technical legal tribunal.

ART. 70. The general directions of customs and indirect contribution, whenever it deems it convenient, shall cause to be examined, in the laboratory annexed to the technical tribunal, the alcohols sent out from or kept in the factories, independently of the examination which may have been made in the factories themselves under the terms of article 69.

Single section. For the exit of alcohols from the factories, aside from the conditions of this article, the responsibility shall rest with the owner of the factory and the fiscal agent who has made the examination.

CHAPTER IX.

CONCERNING THE ASSOCIATION OF THE FACTORIES.

ART. 71. For the collection of the production tax the whole or at least two-thirds of the number of factories at present in existence and representing two-thirds of the total production of last year may constitute themselves in an association under the following conditions:

1. The duration of the corporation shall not exceed five years, counting from the date of approval of the contract by the Government.

2. The expense of supervision of the incorporated factories shall be made by the corporation, which shall annually pay the quantity of 2:000$000 reis for every factory in operation, and in no case shall the sum paid by the corporation for that origin be less than 10:000$000 reis each year.

ART. 72. The rate of production tax to be paid by the incorporated factories shall be 50 reis per liter of liquid produced.

ART. 73. Aside from all the obligations and charges contained in these regulations and incumbent on the corporation as the owner of factories of alcohol and brandies, the corporation is obliged—

1. To buy annually all the sweet potatoes produced in the island of San Miguel e Terceira of the archipelago of the Azores, and which may be offered in the markets of the two islands, in such condition as to admit of being utilized for the distilling industry.

2. To pay for the sweet potatoes the maximum price that has been paid in either one of the last two years for the maximum quantities which each factory has bought in any one of the last three years. As regards the excess which the price demanded may show it shall never be greater than 20 per cent above the maximum cost that has occurred in the same period.

3. To buy annually of the agriculturists of Algarve the maximum quantity of ——— and figs that have been bought for distillation in any one of the last three years; that the selling price demanded by the producer shall not exceed 200 reis for every 15 kilograms of alfarroba and 300 reis for an equal weight of figs.

4. To buy all the beet roots suitable for distillation cultivated on the

mainland and offered in the market at the maximum price of the last three years.

ART. 74. When in any year of the continuance of the corporation, with the exception of the third, it appears that the alcohol of the corporation derived from the Azores is in quantity greater than the demands for consumption, the difference or sum which does not enter into consumption shall be carried in account in the following year for the purchase of sweet potatoes in the proportion of 8 kilograms of potatoes for every liter of alcohol, the agriculturists having to be suitably notified during the first fifteen days of the month of February by means of public announcement in the journal of the islands in order that they may regulate their tillage in accordance with that circumstance.

ART. 75. No incorporated insular factory shall distill for alcohol any other raw material so long as there is to be had any sweet potatoes suitable for the industry and in such condition of price as to satisfy the stipulation of Nos. 1 and 2 of article 73.

ART. 76. In the archipelago of the Azores the consumption of potatoes is to be distributed to the factories existing in the archipelago proportionally to the ordinary production of brandy and alcohol of each.

Single section. In all the insular factories belonging to the corporation the responsibility of the fulfillment of the provisions of Nos. 1 and 2 of article 73 shall be divided among all. In the opposite case the obligation to purchase all the potatoes belongs to the incorporated factory or factories.

ART. 77. All disputes and doubts that may arise between the agriculturists and the corporation or factories and among the incorporated factories shall be decided in the form established in line "n" of section 1 of article 1 of the writ of law of April 12 of the present year.

ART. 78. For the supervision of the tax on the alcohol of the corporation the corporation is obliged to have at least two general deposits in Lisbon and Oporto subject to the direct inspection by the fiscal agent.

ART. 79. All the alcohols of the incorporated factories shall be sent to the deposits of the corporation and be accompanied by a permit conformable to model No. 11 issued by the chief of the fiscal station of the respective factory.

Single section. In the deposits of the corporation the purity of the alcohol shall be verified according to the manner and process determined by the superior officials. In case it is ascertained that the alcohol contains a mixture harmful to health it shall at once be sent to the producing factory in order that its purification be there effected. The verification of the purity of the alcohol of insular origin shall be made in the respective factory, and the permit must show that the analysis was made at the time of exit.

ART. 80. When for any reason foreign alcohol may be secured under such conditions that the price in the national market is equal to or less than 250 reis, the corporation shall have authority to import foreign alcohol on payment of the duty that has been established by the Government and under the terms under which that concession has been made to it, provided that that alcohol shall always satisfy the conditions established in article 67.

Single section. This concession shall never be required by the corporation so long as any alcohol of home production is present in the magazines of the factories.

ART. 81. For the realization of the provision in the preceding article the request made by the corporation shall be sent to the general direction of customs, accompanied by the information of the commissaries

regarding the quantity of alcohol present in the factory, and with an authentic notice of the current prices of alcohol in the foreign market.

ART. 82. There shall be applicable to the incorporative factories all the other provisions of these regulations which refer to supervision, assessment, and collection of tax, to the licenses or operation of the factories, and to the exemption granted to the raw material.

Single section. In the models used conformably to the determination of this article it shall be indicated that the factory is one of those incorporated.

ART. 83. For the exact fulfillment of these regulations and of the clauses of the contract alluded to in No. 1 of article 72 the representatives of the corporation and each one of the incorporated factories shall be responsible in their person and goods.

CHAPTER X.

ON TRANSGRESSIONS AND MISDEMEANORS.

ART. 84. Transgression shall be considered to be all the acts not comprehended in article 87, but contrary to these regulations.

Single section. In transgression, negligence is always punished.

ART. 85. The transgression to which the preceding article refers shall be punished with a fine of from 2$000 to 300$000 reis:

1. In case of absence or inaccuracy of the declaration alluded to in articles 26, 27, and 32.
2. In case of absence of licenses for the operation of the factory, stills, or any other distilling apparatus.
3. In case of the introduction or attempt to introduce in the factories raw material not designated in the license.
4. In case of the sale or use of the alcohol not perfectly rectified.
5. In any other transgression not specified in this article.

ART. 86. A misdemeanor means every fraudulent act intended to avoid in whole or in part the payment of the production tax to which the alcohols and brandies are subject and of the others that are to be paid with it.

ART. 87. A misdemeanor covering the imposition of the requisite fine is considered to be:

1. The issue of any quantity of alcohol and brandy outside of the factories at any other point than that intended for entrance and exit at the same factory.
2. The distillation of alcohols and brandies that are subject to the production tax the raw material of which is not comprised in the declaration and license.
3. The fact that its owners have not given the declared destination to the raw material sent under the conditions of articles 62 and 63 within the lines of circumscription of Lisbon and Oporto.
4. Any other act committed for the purpose of avoiding the payment of the production tax or any other tax that is to be paid with it, on the alcohols and brandies subject to those taxes.

ART. 88. The infraction mentioned in the preceding article involves the seizure of all the alcohols and brandies found in the factory or in any other locality where the same is produced for a guaranty of the payment of the fines and taxes due.

SEC. 1. The seizure may also be made anywhere else where alcohols and brandies withdrawn from the production tax are found.

SEC. 2. The alcohols and brandies can only be seized when, having issued from the localities of production, they are at once followed up by

the fiscal agent, or when they are found without the conditions required by article 67. In these cases means of transportation can also be seized.

ART. 89. The misdemeanors shall be punished with a fine of 50 to 100 per cent of the value of the alcohols and brandies withdrawn, and in no case shall the fine be less than 2$000 reis.

The value of the alcohols and brandies, regulated by the current price in the municipality where the misdemeanor has been perpetrated, shall be fixed by the authority instituting its use.

ART. 90. In cases of repeated offenses the fine shall never be less than twice the last fine imposed, provided that in case of misdemeanor it shall not exceed the value of the alcohols and brandies.

Single section. In cases of repeated offenses the exception noted in the final part of article 25 shall cease in regard to factories now in existence.

ART. 91. The imposition of the fine does not dispense with the payment of the production tax and of the others that are to be paid with it.

ART. 92. The suit for the imposition of the fines spoken of in these regulations shall in everything be regulated by the provisions applicable to the water tax.

ART. 93. The distribution of the fines shall be made conformable to the provisions for the fines imposed for offenses and misdemeanors against the water tax.

CHAPTER XI.

VARIOUS PROVISIONS.

ART. 94. No new consumption or water tax may be levied in the localities where they are exposed for sale on the alcohols and brandies that have been sent out of the factory for consumption. In the cases of article 60 they shall be accompanied by a pass conformable to model No. 9. The pass shall be presented to the authority or to the employee of the locality or station who is authorized to collect and supervise the duties and imposts.

Single section. Having received the permit, he who receives it shall give a certificate according to model No. 10, in which he declares that the imposts or duties relating to the goods mentioned in the tax itself have been paid or will in due time be paid, returning the stub to the fiscal station near the respective factory.

ART. 95. Within the space of one month on the mainland of the Kingdom and of two months on the adjacent islands all the alcohol factories shall send to the first department of the general direction of customs and indirect contribution a sample of 1 liter of rectified alcohol which they produce, that it may be analyzed in the laboratory of the technical legal tribunal.

SEC. 1. The result of this analysis shall be communicated to the persons interested, in order that they may be informed whether the alcohol which they called rectified is or is not in the condition required by article 68 of these regulations.

SEC. 2. The samples required by this article shall be authenticated and sealed by the commissaries, who shall attest that they are samples of alcohol actually produced in the factories.

SEC. 3. The provisions of this article shall not interfere with the text established in article 70.

ART. 96. Regulations shall become operative on the 1st day of June, 1892.

The Palace, May 12, 1892.

JOAQUIM PEDRO DE OLIVEIRA MARTINS.

MODEL NO. 10.

District of ———. Municipality of ———.
Customs office of ———. Delegation (or station of shipment) of ———.
Taxes. { Consumption tax, $——.
{ Water tax, $——.

Certificates of exemption from tax of —— liters of alcohol.

On —— liters of alcohol (or brandies) which shall be sent out from the distilling factory of ——— according to furnace No. ——, and shall enter into the establishment (or house) ——, the water tax shall not be collected for the reason that this tax to the amount of —— was (or will in due time be) paid with the respective production tax. When the alcohol above mentioned shall be transformed into another beverage which increases in quantity, the excess shall be reported to this department (or to the competent department), and the additional tax shall be paid under penalty of misdemeanor.

Department (customs office or delegation) of ———, on the —— day of ———, of 18—.

[1] ——— ———.

MODEL NO. 11.

District of ———. Municipality of ———.

Distilling factory of ———. Permit No. ——.

From the factory there was sent out, destined for the deposits of the corporation situated at ———, —— liters of ———, of a weight of —— kilograms, including the vessels.

The alcohol mentioned in this permit can not be sold outside of the locality for which it is destined, and any contravention thereto shall render the person liable to the penalties of the law in case of infraction.

Special station of the factory of ———, on the —— day of ———, 18—.

The Chief of Station.

Certificate of reception.

On the —— day of ——— there were received in this deposit —— liters of ———, of a weight of ——, sent by the factory of ———.

Chief station of deposit of ———, on the —— day of ———, 18—.

The Chief of Station of Deposits of ———.

---

[1] Signature of the revenue notary or the employee of customs office, delegation, or station of shipment which has issued the certificate.

REGULATIONS CONCERNING THE FACTS ON THE PRODUCTION OF ALCOHOL AND BRANDY, APPROVED BY DECREE OF SEPTEMBER 20, 1888, PRECEDED BY THE TEXT OF LAW OF THE 13TH OF JULY OF THE SAME YEAR.

TEXT OF LAW.

Dom Luiz, by the grace of God, King of Portugal and the Algarves, etc., make known to all our subjects that the General Cortes has decreed and that we desire the following law:

ARTICLE 1. The taxes established in the general list in the custom-houses for brandies and alcohol are modified in the following way:

217. Simple brandy and alcohol in casks or bottles, for the decaliter of pure alcohol, 1$500 reis.

218. Simple brandy and alcohol which come in jugs, bottles, or similar vessels, and alcoholic beverages not specified, per decaliter of liquid, 1$900 reis.

The Government shall be authorized to raise the tax noted in this article in case there should be established in the future in the producing nation a premium on exportation of these products.

ART. 2. The brandy and alcohol produced in the territory of the Kingdom and the adjacent islands are to be subject to the duty on production of 200 reis per decaliter of pure alcohol.

The following are exceptions:

1. Brandy and alcohol derived from the distillation of wine, figs, and grape hulls, the two last mentioned when contained in ordinary stills of a capacity not exceeding 750 liters, but not having a rectifier.

2. The brandy and alcohol derived from the distillation of sugar cane produced in the island of Madeira.

3. Alcohols which for personal consumption or for the improvements of wines are utilized by the means prescribed in the regulation, the production tax for these being 100 reis per decaliter of pure alcohol.

2. The production tax shall be paid as it shall have been calculated by means of counting devices, which measure either the liquid subject to distillation or the distilled product, or both.

(*a*) If the calculation of the production has been made by measuring the liquid to be distilled, the regulation shall determine the output in pure alcohol of each metric unit of the same liquid.

(*b*) If the calculation has been made for the distilled product, the regulations shall fix the mode of determining the alcoholic strength of the product referred to.

3. The production tax on alcohol and brandies shall be paid in some one of the forms determined in the fiscal legislation.

4. The provisions of the present article are applicable to artificial butter made in the country, for which the production tax shall be 150 reis per kilogram, deducting, however, the importation tax paid for the raw fat material indispensable for its manufacture and the same amount of 150 reis per kilogram of natural butter used in the manufacture.

ART. 3. The water tax for alcohol shall be 70 reis in Oporto and Villa Nova de Gaia, and 60 reis in the rest of the country; the consumption tax at Lisbon shall be 120 reis, including gin, liquors, and creams; and any other alcoholic liquors not specified, 170 reis.

ART. 4. The brandies, alcohols, varnishes, and liquors that have paid the production tax possess the right, when they are exported to foreign countries, of a premium on exportation of a decaliter of pure alcohol under the terms of the provisions of the regulations.

ART. 5. The factories established within the precinct of Lisbon and

Oporto remain respectively subject to the consumption tax or to the water tax on alcohols and brandies consumed within the said cities, the assessment and payment of these taxes being made under the terms of article 2, No. 2, of the present law, the factories being exempt from all consumption tax for the raw material which they shall employ.

SEC. 1. Consumption tax and the water tax will be abolished on liquors and creams produced at Lisbon and Oporto with alcohols and brandies which have respectively paid the taxes determined in this law or in the preceding laws.

SEC. 2. The cash product of the consumption tax in Lisbon on brandies, alcohols, liquors, and creams when exhibited, shall constitute a receipt of the respective municipal chamber.

ART. 6. The income from the production tax established by article 2 of the present law, as well as any increase of the income from the water tax on alcohol, brandies, and alcoholic beverages, shall constitute a special fund for the guarantee of the right granted or to be granted for the use of railways.

ART. 6. The Government is authorized to decree the regulations necessary for the execution of the present law, including those necessary for the superintendence, in order to avoid the sale for consumption of alcohols, brandies, and alcoholic beverages adulterated with substances prejudicial to the public health, provided that it shall not establish penalties exceeding those prescribed in the existing legislation relating to the water tax and to the sanitary police.

SEC. 1. The charge for superintendence, both as regards the consumption tax on brandies and alcohols and the water tax and the healthfulness of alcohols and alcoholic beverages offered for sale for consumption or for improving wine, shall not exceed 10 per cent of the receipts from the production tax created by the present law, and from the addition of the water tax on the same alcohols and alcoholic beverages.

SEC. 2. The Government can not establish a special room for the superintendent nor increase the present room for the execution of the provision in section 4 of article 2 of the present law.

ART. 8. All legislation contrary to the present is repealed, including the special tax of industrial contribution representing the consumption tax of the manufactories of brandies in Lisbon and Oporto.

We therefore command all the authorities to whom the knowledge and execution of the said law belong that they fulfill it and keep it and cause it to be filled and kept as they are contained therein.

The minister and secretary of state of the business of the courts shall cause it to be printed, published, and distributed.

Given at the palace on the 13th of July, 1888.

The King, with rubric and guard.

MARIANNO CYRILLO DE CARVALHO.

[Place of the great seal of the Royal Arms.]

Writ of law by which your majesty, having sanctioned the decree of the General Cortes of the 11th of July, present, which modifies the taxes established in the general tax book of the custom-houses for brandies and alcohols, and authorizes the Government to levy these taxes thus modified in case there should be established in the future the producing nation's exportation premiums for such products, and also marking the production tax to which the artificial butter produced in the country is subject, orders the same decree to be fulfilled and kept as therein set forth by the form declared on the back hereof.

Done for your majesty by Alvaro Evangelista da Silva Mendes Leal.

DECREED.

Having the authority given to the Government by article 7 of the writ of law of the 13th of July of the current year, I deem it good, in the name of the King, to approve the regulations concerning the production tax on alcohols and brandies produced in the mainland of the Kingdom and the adjacent islands, which have been signed by the minister and secretary of state of the royal household.

The president of the council of ministers, minister and secretary of state of affairs of the Kingdom, and the minister and secretary of state of affairs of the household shall thus understand it and cause it to be executed.

At the Palace, on the 20th of September, 1888.

THE PRINCE REGENT.
MARIANNO CYRILLO DE CARVALHO.
JOSÉ LUCIANO DE CASTRO.

REGULATION FOR THE PRODUCTION TAX ON ALCOHOLS AND BRANDIES.

CHAPTER I.

FUNDAMENTAL PROVISIONS.

ART. 1. The brandy and alcohol produced in the mainland of the Kingdom and the adjacent islands are subject to the production tax created by the law of July 13, 1888.

Single section. The following are exempted from the provisions of this article:

1. The brandy and alcohol derived from the distillation of wine.
2. The brandy and alcohol from figs and grape hulls, when obtained in ordinary stills on a capacity not exceeding 750 liters which has no rectifier.
3. The brandy and alcohol distilled from sugar cane produced in the island of Madeira.

ART. 2. The amount of production tax spoken of in the preceding article shall be from 100 to 200 reis per decaliter of alcohol (10 to 20 reis per liter).

It shall be 100 reis for the pure alcohol which, within the factories, shall be rendered unfit for personal consumption or for the improvement of wine by the means determined in Chapter IX of these regulations.

It shall be 200 reis for all pure alcohols not comprised in the exceptions under Nos. 1, 2, and 3 of the single section of article 1.

Single section. To this tax there is to be added the additional tax of 6 per cent, created by the law of April 27, 1882.

ART. 3. The factories which are established, or those which shall be established, within the limits of the cities of Lisbon and Oporto are respectively subject to the consumption tax or to the water tax for alcohols and brandies consumed within the said cities.

Single section. The same factories shall also be subject to the water tax for alcohols and brandies which shall issue from them for consumption in the other municipalities of the Kingdom.

ART. 4. Conformable to the determination in the preceding article, in the parts which refer to the collection of taxes and imposts, the factories established in any municipality of the country, except Lisbon and Oporto, shall be, respectively, obliged to make payment of the consumption tax

or the water tax to which the alcohol and brandies destined for consumption in Lisbon or the other municipalities in the Kingdom are subject.

ART. 5. For liquors or creams manufactured in Lisbon and Oporto, as well as alcohols and brandies which have, respectively, paid the taxes and imposts determined in articles 1 and 3, the consumption tax and water tax are abolished.

ART. 6. There shall be exempt from the consumption and water tax the liquors and creams manufactured in any other municipality of the Kingdom outside of Lisbon and Oporto, as well as alcohols and brandies which have already paid the said duties and imposts.

CHAPTER II.

CONCERNING THE DISTILLATION OF ALCOHOLS AND BRANDIES.

ART. 7. The Government, whenever it deems it convenient, shall cause to be placed in every one of the factories, in a suitable place, counting devices which shall measure either the liquids subject to distillation, or the products distilled, or the liquids to be distilled, and the distilled products.

Single section. The counting devices may indicate, besides the quantity, the alcoholic strength of the liquid which shall issue through the distilling apparatus.

ART. 8. In the first case of the preceding article each decaliter of liquid to be distilled shall have the equivalent in pure alcohol, which shall be determined in special instruction.

ART. 9. In the second case of article 7 the alcoholic strength of the distilled product shall be fixed here by obtaining in the table of Gay Lussac the percentage which results from the graduation and temperature found, multiplying this percentage by the quantity of liquids to be verified, cutting off three figures on the right, including the decimal.

ART. 10. The distilling factories which are in future established or are now in existence, whenever they are modified or extended, shall be constructed under a fiscal plan, according to which the building shall be surrounded by a wall 3 meters high and 0.50 of a meter in thickness, with a single door for the service of entry and exit. The distance between the outside of the building of the factory and the wall shall not be greater than 15 meters nor less than 5.

Single section. The tubing and communications between the different sets of apparatus shall be exposed and readily accessible to inspection by the fiscal agent.

ART. 11. In the existing factories the provisions contained in the single section of the preceding article shall be executed within the space of six months. The other provisions of the same article shall be only applicable to them when, having stopped their work, they shall resume it after the expiration of at least one year, saving the provision of the single section of article 98.

ART. 12. The license spoken of in the decree of October 21, 1863, shall not be granted for the purpose of allowing distilling factories to be established in buildings which do not fulfill the conditions designated in article 10.

ART. 13. The individuals who, after the publication of these regulations, shall desire to establish factories or stills of alcohol and brandy, or wish to continue the distillation already begun and interrupted for some reason and for which the license has terminated, shall make decla-

ration conformable to model No. 1, which they shall submit, thirty days before beginning the work, to the revenue inspector of the district.

Single section. These declarations shall be made in triplicate, one of the three copies containing the appropriate receipts.

ART. 14. As regards factories or stills already in existence and which shall be in operation at the date of the publication of these regulations, their owners shall make declarations similar to those of model No. 1, which shall be handed to the revenue inspector within eight days, counting from the day on which the said regulation became operative.

ART. 15. The declarations referred to in articles 13 and 14 shall give the following indications:

1. The location of the factory or the locality where either a still or a distilling apparatus is to be established.
2. The name of the factory.
3. The name and residence of its owner or manager.
4. The designation of the distilling and rectifying apparatus, the system, the capacity of the boilers and columns, and the name of the maker.
5. The raw material used or to be used in the distillery and its origin, indicating whether or not it is produced by the owner himself.
6. The quantity of alcohol which it is intended to produce per day or week, its graduation and the quantity of raw material employed to obtain it.
7. The period of time within one civil year during which the factory or still is to operate with the declaration of the hours of work per day and per night, as the case may be.

ART. 16. The revenue inspector shall send without delay two of the triplicate copies of the declaration mentioned in articles 13 and 14 to the general administration of the customs and indirect contribution.

SEC. 1. As soon as the triplicate copies referred to are received in the third department, this department, after causing the most competent persons to ascertain that in the raw material mentioned in the declaration none are comprised that are prejudicial to the public health, shall authorize in one of them the issuing of the license required by article 24, and shall take the necessary measures for the establishment of a competent fiscal station.

SEC. 2. The triplicate copy with the authorization shall be returned to the revenue inspector, who shall at once send it to the revenue notary of the municipality for the purposes designated in article 27.

ART. 17. The first and the additional declaration for any alteration or change in the distilling apparatus shall be accompanied by designs or print of these apparatuses and the plan of the building where they are or will be established.

Single section. The designs or prints and the plans above indicated shall accompany the triplicate copies sent to the general administration of customs and indirect contribution.

ART. 18. The factories or stills can not employ in the distillation any raw material which is not mentioned in the license, nor make any modification or change which involves an alteration in the indication made in the declaration, unless express mention is made of this in the license itself. For this purpose the owners or managers of the factories or stills shall make an additional declaration which shall comply with the terms indicated in articles 13, 14, and 16.

Upon receiving the triplicate of the declaration the revenue notary shall note in the license when it was presented to him, the new raw material to be used, or the modifications and changes intended to be made.

ART. 19. The factories or stills can not distill promiscuously alcohols and brandies subject to production tax and those exempt from it.

SEC. 1. The same factories or stills may, however, perform each of these distillations by itself in distinct periods.

SEC. 2. The Government, however, having heard the competent authorities, may permit the distillation prohibited by this article.

ART. 20. The entry of the raw material into the factories and the exit from them of alcohols and brandies must, as a rule, take place between sunrise and sunset.

Single section. The Government, keeping in view the conditions and movements of the factories, may allow the service designated in this article to be performed also at night.

ART. 21. The manufacturer shall keep a book of the general working of the factory, approved by the district commissary of fiscal police, under whose jurisdiction will come the station established in the factory. This book shall be of the kind shown in model No. 5.

Single section. Manufacturers shall keep the book of accounts up to date, and shall present it to the authorities and employees charged with inspecting and supervising the factories whenever demanded by them.

ART. 22. The factories shall keep a special record.

SEC. 1. The casks or vessels in which the alcohols or brandies shall go out of the factories shall be previously measured and marked, and branded at both ends. The mark shall contain the legend, "Factory of ———. Supervision of the production tax. Liters, —— (or the number thereof)."

SEC. 2. In the provisions of this article there are not comprised vessels of a capacity of less than 20 liters in which alcohols and brandies are to be sent out for consumption in the locality of the factory.

ART. 23. The work of distillation is regarded as interrupted when the time of the license having expired it is not renewed.

CHAPTER III.

CONCERNING LICENSES FOR THE OPERATION OF FACTORIES AND STILLS.

ART. 24. No factory or still, either fixed or movable, whatever be the substance distilled, may operate unless its owners have previously provided themselves with a license for the purpose.

ART. 25. A license shall only comprise within its term the period of time indicated in column No. 14 of the declaration model No. 1, and it shall in no case exceed one year.

Single section. It may, however, be renewed when the term expires.

ART. 26. The license shall contain the declarations mentioned in article 13.

ART. 27. The license mentioned in article 24 shall be sent to the revenue notary of the ward or municipality under the terms and with the declarations of model No. 2.

ART. 28. The revenue notary, having received the triplicate of the declaration alluded to in section 2 of article 16, shall send the license as soon as it is requested by the person interested. The license shall comprise all the indications appearing in the triplicate of the declaration.

ART. 29. The revenue inspectors shall make requisition to the general administration of customs and indirect contribution for the printed blanks which they shall need for the service of the licenses which shall be furnished to them in blocks of ten sheets.

Single section. The licenses shall be numbered and enrolled by the revenue inspectors. The numeration is a special one for every municipality or ward, having to begin and end within every civil year.

ART. 30. The licenses granted to factories, stills, or distilling apparatus may be transfered during the term of their duration—

(*a*) Their owners transfer them to others.

(*b*) In case of debts of the owners or proprietors.

(*c*) When they cease to work in one locality in order to establish themselves in another in the same municipality.

Single section. In every one of these cases the licenses shall be presented to the revenue notaries for the record of transfer to the new owners, to the heirs of the deceased, or to the new locality. The record shall only be made after the revenue notary has received the triplicate of the declaration in which the transfer shall be authorized.

ART. 31. In the revenue department of the municipalities or wards there shall be kept a register of all the licenses that have been issued for the operation of the distilling factories, stills, or distilling apparatus. The stubs of the licenses shall serve as registers, and shall be kept in the files to which they belong, and which shall be kept by the general administration of customs and indirect contribution.

Single section. Any license that becomes annulled shall be joined to the stub with the declaration of its annulment, and when it has been separated therefrom it shall be joined to it again by means of gluing.

ART. 32. Of all the licenses that are issued each month the revenue inspectors shall send at the beginning of the following month to the general administration of customs and indirect contribution a report according to model No. 3.

Single section. In order to enable the revenue inspectors to comply with the provisions of this article there shall be sent to them by the revenue notaries reports according to the same model, the necessary substitutions being made therein.

CHAPTER IV.

CONCERNING THE SUPERVISION OF THE TAX.

ART. 33. The superior administration of the production tax and the superintendence in its supervision belong to the general administration of the customs and indirect contribution.

ART. 34. The service relating to the production tax on alcohols and brandies in the general administration of customs shall belong to the third department, to which all the personnel charged with the supervision of the same tax shall be directly and immediately subordinated.

Single section. In order that the head officials may have better knowledge of the way in which the service of supervision and accounting is performed in the distilling factories, the chief of the third department may visit the factories themselves whenever he deems it suitable.

ART. 35. A table conformable to model No. 4 shall be sent by the revenue inspector to the general administration of customs on the 20th day of the month immediately preceding the one to which it refers.

ART. 36. The general administration of customs and indirect contribution shall, by means of the table mentioned in the preceding article and by any other means which it deems convenient to use, exercise the necessary supervision over the production tax.

ART. 37. The service of the supervision of the production tax together with that of the distilling factories in the localities where alcohols are

produced shall be performed by the force of fiscal police created by the decree of November 17, 1887.

ART. 38. In order to aid the inspectors of indirect contribution mentioned in article 88 and the chief of the third department of general administration of customs in the fiscal services incumbent on them there shall be three district commissaries of fiscal police; one of them performing the service in the customs district of the south, the other in the customs district of the north, and the other in the customs district of Ponta Delgada.

ART. 39. It is incumbent on the district commissaries directing the service in each district to see to the manner in which the provisions of the regulations are carried out as well as the ordinances of the Government, the ordinance of the general administration of customs, and the orders of the technical inspectors of indirect contribution that the provision in the writ of law of July 13 of the present year be observed both on the part of the supervision and on the part of the manufacturers; and thus to fulfill the orders that shall have been given them by those functionaries regarding the said service.

Single section. The district commissaries, though charged in particular with the duties set forth in the preceding article, can not exempt themselves from any fiscal service of the indirect contribution belonging to their functions with which they have been charged by the general administration of customs.

ART. 40. The district commissaries shall have the compensation and allowance for expenses fixed for them by the decree of November 17, 1887.

ART. 41. Added to every distilling factory there shall be a fiscal station composed of—

1. One adjunct commissary of fiscal police at the station.
2. One fiscal policeman of the first class.
3. One fiscal policeman of the second class.
4. One fiscal policeman of the third class.

SEC. 1. The fiscal station shall have under its charge—

1. To keep the account of the books of models Nos. 5 and 6.
2. To assess on the first day of every month the production tax and the tax on consumption and the water tax which are to be collected with it.
3. To send to the proper revenue notary on the day indicated in No. 2 a table of assessment, referred to in article 53.
4. To proceed to the verification and graduation of alcohols.
5. To take protocols according to model No. 10.
6. To examine whether the factories or stills are provided with the proper license, not permitting any operation so long as the license has not been presented to them.
7. Not to consent that any raw material shall enter into the factories that has not been mentioned in the licenses.
8. To seize any alcohol or brandy that is unhealthy or has been withdrawn from the production tax and the other duties and imposts that were to be received with it, giving the suitable information for the impositions of fines.
9. To perform as shall be determined in the instructions referred to in the single section of article 90 the service of verification of alcohols and brandies indicated in the same article and the service of any visits and inspection relating thereto to the establishments where alcohols, brandies, and other alcoholic beverages are sold for consumption.
10. To employ all the means tending to prevent perpetration of fraud prejudicial to the revenue and to the public health, as well as those infringing on these regulations and that have not been punished.

SEC. 2. The services designated in Nos. 1 and 5 of the preceding paragraph belong exclusively to the chief of the fiscal station.

SEC. 3. The services under 6 to 10 of section 1 shall be performed—

(*a*) In municipalities where there exist fiscal stations near the factories, by the personnel of these stations.

(*b*) In the other municipalities of the country, by the personnel of the fiscal police in the service of the water tax.

SEC. 4. In the municipalities in which there is more than one fiscal station the services of the preceding paragraph shall be performed by all in rotation.

ART. 42. The fiscal station shall be established near the door of service for entry and exit of the factory, in a dwelling furnished by the factory.

ART. 43. The personnel of the fiscal station may be altered or modified in number and quality as circumstances and the exigencies of the service may require.

ART. 44. When in any city, town, or place there exist different factories, all of them or some of them of small extent, then the single fiscal station with a larger number of fiscal policemen may perform the service for all.

ART. 45. In the case of the preceding article the headquarters of the fiscal station shall be in the factory having the largest operation, from which the necessary personnel shall be detached for the service of the others, there being always in each one of them a fiscal policeman of first class to aid and replace in the necessary accounts the chief of the station.

Single section. The accounting shall be directed and made under the responsibility of the chief of the station.

ART. 46. The provisions of articles 44 and 45 may be made applicable to the municipalities in which only ordinary stills are at work, which, by their simplicity and small capacity, can not be considered as distilling factories.

ART. 47. In case of temporary interruption of the work of distillation, due either to a lack of raw material or to some other casual circumstance, that part of the supervising personnel that may be dispensed with may be employed in other fiscal service.

ART. 48. Whenever the work of a factory or still stops, its owners shall make the requisite communications to the chief of the fiscal station, who shall at once send it to the respective district commissary, and he shall send it to the third department of the general administration of customs and indirect contribution.

Single section. In the case provided in this article the entire supervision shall be withdrawn only when in the factory there no longer exists any quantity of alcohol, or when, the inventory of the remaining alcohol having been made, its owner guarantees the payment of the tax due.

ART. 49. Every external door to the factories in which no personnel resides is to be locked at the close of the work of the day, and shall have two locks with different keys.

Single section. One of the locks shall be placed by the Government, and its key be in the keeping of the chief of the fiscal station. No door being allowed to be opened or closed without the presence of that officer or of the functionary that replaces him, who shall punctually appear at the hour designated for this purpose.

ART. 50. The distilling factory shall furnish to the fiscal station registered scales of sufficient strength and solidity and all the weights and

other instruments necessary for the verification of the strength of the alcohol and brandies produced by them.

SEC. 1. All these instruments, and others which are indicated in special regulations as necessary for the determination of the capacity of the vessels, shall be stamped by the chemico-fiscal laboratory and are to be kept in the custody of the fiscal station.

SEC. 2. Stamping shall be made by comparison with standard measures and instruments existing in the chemico-fiscal laboratory, which measures and instruments shall be regulated by a standard which shall be kept for that purpose by the superior commissioner of customs.

CHAPTER V.

CONCERNING THE ASSESSMENT OF THE PRODUCTION TAX.

ART. 51. The assessment of the production tax is made in relation to the preceding ones on the first day of the following month, in view of the account of the books shown in model No. 5.

ART. 52. In the first pages of the book mentioned in the preceding article there shall be entered the quantity produced in alcohol and brandy indicated by the counting devices when they are used. On the second page of the same book the quantity that has gone out from the factories, with the indications of its destination or as exemplified in the respective model.

ART. 53. Having verified according to the respective entry the quantity and graduation of alcohol and brandy produced and sent out of the factory, the chief of the fiscal station shall make the assessment of the production tax to be paid for the quantity in pure alcohol that has gone forth, which he shall enter in the model book No. 6.

Having this book in sight, he shall draw up a schedule conformable to model No. 7, which he shall send on the day noted in article 51 to the revenue notary of the proper municipality or ward, notifying the owner or manager of the factory that he is to satisfy the requirements of the imposts which he owes within the space of three days.

Single section. With the schedule model No. 7, the chief of the station shall also send a note of the expenses incurred by the personnel of the same station, in order to enable the revenue notary to fill out the columns Nos. 70 and 78 of the schedules which they have to send.

ART. 54. With the production tax there shall be assessed and paid, under the terms of Chapter VI, paragraph *a*, the consumption taxes due on alcohols and brandies which issue from the factories for consumption in Lisbon,[1] and the water tax due on alcohols and brandies which shall go forth from the factories for consumption in other municipalities of the Kingdom.[2]

ART. 55. Appeal from the assessment spoken of in the preceding article shall be made without suspensive effect to the general administration of customs, which, being furnished with all the documents that the interested parties have to produce, shall, within the space of eight days, counting from the date of notification spoken of in article 53, place the matter in the hands of the respective revenue notary, or shall transmit it to the competent revenue inspector, in order that he may cause it to be transmitted to the general administration of customs.

---

[1] Consumption tax, 120 liters.

[2] Water tax: In Oporto and Villa Nova de Gaia, 70 liters; in the other municipalities of the Kingdom, 60 liters.

CHAPTER VI.

ON THE COLLECTION OF TAX.

ART. 56. The payment of the production tax is to be made in the competent receiver's office by means of a pass solicited by the owner or manager of the factory from the revenue notary within the time noted in article 53.

ART. 57. With the tax spoken of in the preceding article there shall also be collected the consumption tax and the water tax that have been assessed under the terms of article 54.

ART. 58. Having in sight the assessment referred to in article 53, the pass or payment shall be made according to model No. 8.

ART. 59. The payment spoken of in articles 56 and 57 may be effected under the terms of article 222 or the organization of customs of December 29, 1887.

ART. 60. The pass, having been restored to the revenue notary with a note of payment, shall be recorded in the respective assessment, and thereupon the same notary shall make out the proper receipts, which, having been signed by him and by the receiver, shall be handed to the factory.

ART. 61. The revenue notary shall send by the eighth day of every month to the revenue inspector of the district a schedule drawn up conformable to model No. 4, excluding column No. 1, and substituting the words "district" for "municipality" and "revenue inspector" for "revenue notary".

Single section. Of all the schedules which he shall have received the revenue notary shall form the record mentioned in article 35, to which he shall give the destination indicated in the same article.

ART. 62. All the income from the production tax, and the consumption tax and water tax, which have been collected with it, is considered eventual.

ART. 63. For the collection of the production tax spoken of in these regulations the inspectors, notaries, and collectors of revenues, shall not receive any perquisite.

ART. 64. If after the space of three days, referred to in articles 3, 53, and 56, the tax is not shown to have been paid by means of the presentation of the receipts to the competent fiscal station, no alcohol shall be permitted to go out of the factory.

Single section. This penalty shall cease as soon as the payment of the tax shall have been proven.

CHAPTER VII.

CONCERNING THE EXPENSES OF SUPERVISION.

ART. 65. The expenses of supervision of the production tax on brandies and alcohols, and the water tax on the same, and in regard to the healthfulness of the alcohol and alcoholic beverages exposed for sale for consumption or for improving wines, shall not exceed 10 per cent of the income from the production tax and the addition of the water tax.

ART. 66. The 10 per cent spoken of in article 65 shall cover the remuneration of the personnel of supervision and verification of the alcohols and all expenses, both ordinary and extraordinary, that it may be necessary to make, including expenses of visits and inspection in the distilling factories and those of artificial butter.

ART. 67. The expenses for visits made in virtue of the provision of articles 34 and 89, single section, is fixed at 2,000 reis per day for the mainland of the Kingdom.

SEC. 1. For the adjacent islands the expense shall be fixed by decree of the revenue minister.

SEC. 2. Except under special authorization no more than seventy days in the year shall be employed in visits and inspection.

CHAPTER VIII.

CONCERNING EXEMPTION GRANTED FOR RAW MATERIAL USED IN DISTILLATION.

ART. 68. The raw material which the factories established within the limits of Lisbon and Oporto shall use in the distillation of alcohols and brandies subject to the production tax shall be exempt from the consumption tax.

ART. 69. The exemption of which the preceding article speaks is to be made observing the provisions of the following article.

ART. 70. The raw material subject to the consumption tax, to which by the terms of the preceding article the exemption from these taxes is granted, having been presented at the entrance line, its owners shall declare in writing its quantity and quality and the factory for which it is intended, and request a fiscal employee to accompany them to the locality of their destination.

ART. 71. The raw material having been found to agree with the declaration, the employee in charge of the line shall make a statement to that effect in the declaration, and, giving it an entrance permit without payment of the consumption tax, shall cause it to be accompanied by a fiscal employee to the factory for which it is intended.

ART. 72. With the raw material, and in the keeping of the employee who has to accompany it, there shall also go the declaration spoken of in article 7, which he shall hand to the chief of the fiscal station near the factory.

ART. 73. The chief of the fiscal station, making the same verification, as set forth in article 71, shall return the declaration in case it is found conformable, noting in it the fact that the raw material alluded to has entered into the factory.

Single section. The declaration shall be filed for the security of the employee charged.

ART. 74. If the material described in the declaration does not agree with the actual material, showing differences more or less, the chief of the fiscal station shall proceed conformably to No. 8 of the first section of article 41, and article 96, sending the declaration with the suitable information to the respective authority.

CHAPTER IX.

CONCERNING THE METHYLATION OF ALCOHOLS FOR PERSONAL CONSUMPTION OR FOR THE IMPROVEMENT OF WINE.

ART. 75. Alcohols, brandies, and other alcoholic beverages may be rendered incapable for use for personal consumption or for improving wines, either voluntarily or in an obligatory way.

ART. 76. The methylation shall be voluntary when it is requested by the manufacturer or owner of alcohols, brandies, and alcoholic beverages who intends to methylate it.

The methylation is obligatory when decreed for purpose of shipment or on the occasion of a visit; and every establishment for the sale, transportation, or keeping of alcohols and alcoholic beverages adulterated with substances harmful to health, as well as the alcohol which, under the same condition, is shipped from the factories intended to be consumed, shall be methylated.

ART. 77. In all authorizations for voluntary methylation the manufacturer or owner of alcohols, brandies, or other alcoholic beverages who intends to render them useless for personal consumption or for improvement of wine shall present to the chief of the competent station a declaration in duplicate mentioning in it the quality, quantity, and degree of the alcohols. The declaration shall be at once sent to the district commissary and by him to the third department of the general administration of customs and indirect contribution.

ART. 78. The third department of the general administration of customs shall send one of the two duplicates of the declaration referred to in the preceding article to the technical inspector of indirect contribution.

The declaration having been received by the technical inspector, he giving notice to the owners of the alcohols of the quantity of substances he has to employ in the methylation and of the day on which it has to be performed, must present himself punctually, or by his legal representative, in the locality designated in order to proceed in the presence of the owner or his representative.

ART. 79. The substances which must be employed in the methylation of alcohol, brandies, and other alcoholic beverages shall be of such nature as to render the restoration of those liquors technically impracticable, and shall prevent their being used as drinkable alcohols.

Single section. The owner of the alcohol submits to the approval of the chemico-fiscal laboratory the substances which he has to employ in the methylation.

ART. 80. The presence of alcohols and brandies, the methylation of which is to be obligatory, shall at once be made known to the third department of the general administration of customs and indirect contribution, who shall give immediate information of it to the technical inspector if the information has not been given by him.

Single section. In any case, either by his own knowledge or by that which he has obtained from the third department of the general administration, the technical inspector shall proceed, either himself or by his substitute, to the methylation, which shall be inspected under the terms of article 79.

ART. 81. All the expenses for the methylation, whether it be voluntary or obligatory, shall be borne by the manufacturer or owners of the liquids to be methylated.

CHAPTER X.

CONCERNING PREMIUMS ON EXPORTATION.

ART. 82. The brandies, alcohols, varnishes and liquors, which have paid the production tax shall have the right, when they are exported to foreign countries, to a premium of exportation of 160 reis per decaliter of pure alcohol.

ART. 83. In order to give effect to the provision in the preceding article the export shall show—

1. That the production tax has been paid.

2. That the exportation has been effected and that the goods have entered into a foreign country.

In the case of No. 1, the certificate consists of the proper receipts or the authenticated documents attached thereto.

In the case of No. 2, proof shall be given by the receipt of the respective permit of exportation and with the certificate of the importing customs office or the superior authority of the port, duly sealed by this or that office and authenticated by the consul of Portugal.

ART. 84. The equivalents in pure alcohol shall be determined conformably to the provisions of article 8.

ART. 85. With the documents referred to in article 83, the exporter shall request of the general administration of customs and indirect contribution the payment of the premium to which he thinks he has a right.

ART. 86. The request and documents shall be presented to the customs office where the exportation has taken place which, assessing the amount of premium to be paid and certifying the result of the verification previously made for ascertaining the strength of the exported alcohol, shall send it with the information it has to the general administration of customs to be disposed of as justice may require.

ART. 87. The premium having been allowed there shall be issued by the general administration of customs and indirect contribution a drawback certificate drawn up according to model No. 9, which, through the intervention of the exporting customs office, shall be transmitted to the persons interested, to be carried as an account in the payment of any duties or production tax to him or to another exporter or manufacturer of alcohols to whom he shall indorse it.

SEC. 1. The certificate shall only be honored at the exporting customs office or at the receiver's office where the payment of the production tax has been made.

SEC. 2. When the exporter has no taxes or imposts to pay, the amount of drawback certificate shall be refunded to him by the receiver's office mentioned in section 1.

CHAPTER XI.

INDICATION OF THE PURITY OF ALCOHOL AND ITS ANALYSES.

ART. 88. For the verification of the purity of the alcohol and other products referred to in the writ of law of July 13 of the present year and the respective analyses, there shall be created in the general administration of customs and indirect contribution a special service called "technical inspection of indirect contribution."

SEC. 1. This service shall be performed by a technical inspector of indirect contribution, who shall have a salary of 700$00 reis in addition to any other salary.

SEC. 2. A special set of regulations shall define the functions of the technical inspector.

ART. 89. The verification of alcohols and brandies in order to determine their purity may be made—

(*a*) In the chemico-fiscal laboratory.
(*b*) In the distilling factories or in any other localities of production.
(*c*) In the depositories and magazines.
(*d*) In shops and establishments of sale for consumption.
(*e*) In the customs offices.

Single section. The verification is incumbent especially on the technical inspector, for which purpose he shall have the right to visit all

the localities where alcohols subject to fiscal action are manufactured, sold, or kept.

ART. 90. Besides the technical inspector of indirect contribution the verification of alcohols and brandies in the localities designated under the heads *b*, *c*, and *d* of the preceding article may be made by the agent of the fiscal police in the service of the production tax and water tax.

Single section. Special instructions drawn up by the technical inspectors of indirect contribution shall indicate to the agent of fiscal police the mode of making such verification.

ART. 91. When the verifications have been made by the agents of the fiscal police, these, whenever they deem it necessary, shall request the health of the delegates or subdelegates of the health office.

CHAPTER XII.

CONCERNING TRANSGRESSION AND MISDEMEANORS.

ART. 92. All acts comprised in article 95 and not contrary to these regulations shall be considered as transgression.

Single section. In transgression negligence shall be always punished.

ART. 93. The transgression to which the preceding article refers shall be punished with a fine of [.....]

1. In the absence or inaccuracy of the declaration alluded to in articles 13, 14, and 18.

2. In the absences of licenses for the operations of factories, stills, or any other distilling apparatus.

3. In the introduction or the attempt to introduce into the factories raw material not designated in the license.

4. In the sale or use of alcohols prejudicial to public health.

5. In any other transgression not specified in this article.

ART. 94. A misdemeanor shall be any fraudulent act which has for its purpose to avoid in whole or in part the production tax to which alcohols and brandies are subject and the other taxes which are to be collected with it.

ART. 95. Misdemeanors for which the imposition of a fine shall be enforced are the following:

1. The sending of any alcohol and brandy out of the factories which is effected through another point than that authorized for the service of entry and exit from the same factory.

2. The distillation of alcohol and brandies subject to the production tax, from raw materials which are not comprised in the declaration and license.

3. The fact that the owners fail to send the raw material under the conditions of articles 68 and 71 within the limits of Lisbon and Oporto to the destination declared.

4. Any other act committed for the purpose of evading the payment of the production tax, or any other taxes that should be collected therewith, on the alcohols and brandies subject thereto.

ART. 96. The acts mentioned in the preceding article render liable for seizure all the alcohols and brandies found in the factory or in any other locality where the same is produced, the whole serving as guaranty for taxes due.

SEC. 1. The seizure may also be effected in any other place where alcohols and brandies withdrawn without payment of the production tax are found.

SEC. 2. Alcohols and brandies in transit can only be seized when after having gone forth from the localities of production they are at

once followed up by the fiscal agent and they are in any way found with adulteration prejudicial to public health. In this case the means of transportation shall also be seized.

ART. 97. The misdemeanors shall be punished with a fine of from 50 to 100 per cent of the value of the alcohols and brandies withdrawn, which fine shall in no case be less than 2$000 reis.

The value of the alcohols and brandies, regulated by the price current in the municipality where the withdrawal has taken place, shall be taken by the authorities in instituting the proceedings.

ART. 98. In case of a second offense the fine shall never be less than twice the fine last imposed, provided that in case of misdemeanors it shall not exceed the value of the alcohols and brandies when this value is estimated at less than 2$000 reis.

Single section. In cases of repeated offenses in factories the exception indicated in the final part of article 11 shall cease in regard to the factories now in existence.

ART. 99. The imposition of the fine does not dispense with the payment of the production tax and of the other taxes that are to be paid with it.

ART. 100. The process for the imposition of the fines spoken of in these regulations shall in everything be regulated by the provisions applicable to the water tax.

ART. 101. The distribution of the fines shall be made conformable to the determination regarding the fines imposed for transgressions and misdemeanors relating to the water tax.

CHAPTER XIII.

VARIOUS PROVISIONS.

ART. 102. In order that no new consumption tax or water tax may be levied on alcohols and brandies that have gone forth from factories for consumption in the cases of article 54, in the localities where they are to be exposed for sale, they shall be accompanied by a pass conformable to model No. 10. The pass shall be presented to the authorities or employee of the locality or station who is competent to require and supervise the taxes and imposts.

Single section. Having received the pass, he who receives it shall give a certificate according to model No. 11, in which he declares that payment has been made, or shall on the first opportunity be made, of the tax or duties relating to the goods mentioned in the pass, returning the stub to the fiscal station near the factory in question.

ART. 103. The Government, if it shall deem it convenient, shall cause a study to be made of the best processes to be followed in the country for the distillation and rectification of alcohols, and shall organize the collection of official samples of industrial alcohols, which shall serve as types in the analyses and examinations to be made in fulfillment of the provisions of article 7 of the law of July 13 of the current year.

ART. 104. This regulation comes into force on the day of its publication in the diary of the Government.

ART. 105. All legislation to the contrary is repealed.

At the Palace, on September 20, 1888.

MARIANNO CYRILLO de CARVALHO.

MODEL No. 9. (Art. 87.)

[General Administrations of Customs and Indirect Contribution, Third Department.]

Production tax on alcohols and brandies.

Title No. ——.

Premium on exportation, Rs. 4$800.

Mr. ———, resident at ———, obtains the refund of 4$800 reis for the exportation on 300 liters of pure alcohol which he effected on the —— day of ———, 1888, into ———.

The amount of this title shall be received in payment of any duties or imposts on production, or else shall be refunded if he has no duties or imposts to pay under the terms of article 87 of the regulation of September 20, 1888.

Third department of the general administration of customs and indirect contribution, on the —— day, of ———, 188—.

F ———,
Chief of Department.

MODEL No. 11. (Art 102, Single Section.)

District of ———. Municipality of ——.
Customs office of ———. Delegation (or post of dispatch) of ———.
Taxes. { Consumption tax, $——.
Water tax, 12$000.

Certificate of exemption from tax of 200 liters of alcohol.

On 200 liters of alcohol (or brandy) which shall issue from the distilling factory of ———, according to pass No. ——, and shall enter into the establishment (or house) of ——, no water tax is to be collected, as it has been paid (or will in due season be paid) to the amount of 12$000 reis with the respective production tax. When the alcohol mentioned is transformed into another beverage which increases in quantity, the excess shall be manifested in this department (or in the competent department) and the additional duty shall be paid under penalty of misdemeanor.

Department (customs office or delegation) of ———, on the —— day of ———, 1888.

[1] ——— ———.

[1] Signature of the revenue notary or of the employee of the customs office, who shall issue the certificate.

AUSTRIA-HUNGARY.

LAWS RELATING TO THE TAX ON DISTILLED SPIRITS.

ORDINANCES AND EXPLANATIONS SUPPLEMENTARY TO THE EXCISE LAW ON ARDENT SPIRITS OF JUNE 20, 1888.

[R. G. B. Imperial Law Sheet No. 95.]

Instruction for the pro rata apportionment for the second individual distribution of the contingent.

According to section 5 of the law of June 20, 1888 (Imperial Law Sheet No. 96), relating to the regulation of the individual apportionment of the quantity of alcohol to be produced in the kingdoms and lands represented in the Imperial Diet by the distilleries subject to the consumption tax at the lower rate of tax in each single period of management, there are to be taken into consideration in the apportionment taking place for the next triennium, 1891–92, 1892–93, and 1893–94—

A. The distilleries already provided for at the apportionment immediately preceding, in proportion to those quantities of alcohol which they on an average in the period of apportionment immediately preceeding have produced during one period of management at the lower rate of the consumption tax.

B. The agricultural distilleries newly established in the meantime, the apportionment of which is to be fixed by virtue of the provision of section 5, clause 3, of the above-mentioned law.

Therefore those distilleries that have been provided for at the first apportionment of the contingent for the periods of management of 1888–89, 1889–90, and 1890–91, but have not been put into operation at any of those three periods, can not be considered in the next apportionment of the contingent.

Should such distilleries, contrary to expectation, be willing to undertake the operation during the second period of apportionment, then they could be considered only on the basis and in accordance with section 7 of the law governing the apportionment of that quantity of alcohol which becomes disposable in any one period of operation at the lower rate of tax, and therefore those agricultural distilleries which in the meantime—that is to say, in the course of the first period of apportionment—have been newly established, the pro rata apportionments in the sense of clause 3 of section 5 of the law governing the contingent are to be fixed, and that without regard to the fact whether quantities of alcohol that have become disposable to such distilleries have been assigned or not.

The pro rata apportionments for newly established distilleries shall be fixed by the financial board of the country, in virtue of section 5, clause 3, of the law governing the apportionments, according to the extent of the plants of these distilleries with regard to the conditions

of their agricultural character relating to the extent of operation, in a proportion corresponding with the pro rata apportionments which are to be applied for other agricultural distilleries, after the opinion of two experts chosen from the rank of the agricultural distillers has been obtained.

To obtain uniformity, it is ordered:

As in the meantime new agricultural distilleries will be established, those agricultural distilleries will have to be treated that have not been provided for at the first apportionment of the contingent, but that have been set into operation in the course of the first period of apportionment of the reserve contingent, and have already been provided for at the assignment of the quantity of alcohol having become disposable at the lower rate of the tax. Furthermore, there are to be treated as newly established agricultural distilleries those to which as industrial distilleries a contingent had been apportioned, but which in the course of the first period of apportionment have changed into agricultural distilleries.

Finally, there are also to be treated as newly established such distilleries as have actually been established before the expiration of the term of application fixed in section 6 of the law governing the contingentisation for assertion of claims upon the contingent. As a matter of course, with all those distilleries it is presupposed that they in due time have filed their claims, as prescribed by section 6 of the above-cited law; this does not excuse the necessary preparations being made, in order to be enabled to carry out in due time the eventual fixing of the ratio of apportionment. As far as it concerns the process which is to be observed in fixing the ratios of apportionment for the newly established distilleries under discussion, the task of the financial board of the country will be to find out with which agricultural distilleries that have already shared in the contingent and have been in operation the newly established distillery in question can be put into comparison; or, in other words, the extent of operation and the agricultural conditions of distilleries of the same kind, working under similar circumstances, that have been in operation during the first period of apportionment, will be adduced for comparison, and the extent of operations of the newly established distillery in question will have to be fixed to correspond with the extent of operation of such distilleries.

The extent of operation of these distilleries, as a matter of course, can be taken into consideration only with regard to the quantity of alcohol actually produced by them, and not to that which in the first period of apportionment had been allotted for production at the lower rate of the consumption tax.

The following information must be placed at the disposal of the experts for the rendition of a correct opinion:

1. A statement concerning the fermentation space actually used by the individual distilleries in the first period of apportionment.

2. A description of the size and arrangement of the apparatus used for distillation purposes.

3. A statement concerning the quantities of alcohol produced within the three periods of operation 1888–89, 1889–90, and 1890–91 at the lower rate of the consumption tax.

On request made, an inspection of the record of the inventory of the individual distilleries is also to be granted to the experts. Minutes of each such transaction shall be taken in which the opinion of the experts, giving explicit reasons, as also the decision to be rendered by the financial board of the country, are to be embodied. Of the decision

just mentioned the party is immediately to be notified, with citation of section 5 of the law governing the contingentisation, leaving open the remedy by the ministry of finances. The opinion of the experts is not to be embodied in the decision, but it is merely to be stated that the decision has been made after the opinion of two experts from the ranks of the agricultural distillers had been solicited. (Decree of the ministry of finances of February 16, 1891.)

Statements concerning the quantities of alcohol having become disposable.

Amending the decree of the ministry of finances of November 4, 1888 (No. 37912), it was ordered that, beginning on the 1st day of January, 1891, the statements concerning the quantities of alcohol disposable at the lower rate of the consumption tax are to be reported, thereafter every month, not later than the tenth day of the subsequent month, instead of on December 1, March 1, and at the end of June of every year.

These statements must contain—

(*a*) The location of the distillery.

(*b*) The contingent definitely allotted.

(*c*) The quantity of alcohol subsequently allotted at the lower rate of tax.

(*d*) The quantity of alcohol having become disposable in the month in question.

(*e*) Finally, the quantity of alcohol which was reported as disposable in the former statements.

What quantities of alcohol are to be considered disposable have already been published by the decree of the ministry of finances, of November 4, 1888, and it is merely remarked that if a distillery is not willing to produce in a period of operation the quantity of alcohol apportioned to it at the lower rate of the consumption tax, a recorded declaration, legally binding, is to be demanded, and the supervising officers must see that the quantities of alcohol becoming disposable are stated in due time.

Definition of the expression "spirituous liquids."

In the sense of section 1, line 1, of the execution ordinance, there are also excluded from the distillation exempt from duty such persons as carry on trade in other spirituous liquids than brandy and whisky—as, for instance, with wine and beer, respectively, or are engaged in the barroom sale and retailing of such liquids. (Decree of the ministry of finances of December 14, 1890.)

The interruption of distillation exempt from tax within the allotted period is no defraudation of the revenue.

In special cases, in which a distiller favored with exemption from revenue has been convicted as guilty of an aggravated transgression of the revenue laws by not reporting dutiable proceedings, for the reason that he had not uninterruptedly carried on the distillation exempt from revenue within the granted period, the ministry of finances has declared that such a deviation from the provision for the uninterrupted distilling operation prescribed in the inspection sheet for the distillation exempt from duty does not involve the defrauding of the revenue. (Decree of the ministry of finances of April 25, 1890, executive ordinance 1889.)

By whom the forfeit of the privilege of distillation exempt from duty has to be declared.

The declaration of forfeiture of the privilege of distillation exempt from duty, conceded and sustained in section 5 of the spirit-revenue law, by reason of abuse of said privilege, is not to be rendered by means of an administrative sentence of the boards of finances, but by means of a punitive sentence of the courts of revenue, and the supreme courts of revenue are competent to such declaration of forfeiture in question in the sense of sections 517 and 518 of the penal law of revenues. (Decree of ministry of finances of April 6, 1891.)

Treatment of the stamps on the acknowledgements of drawbacks of the spirit tax.

To obtain uniform process, notice is given that the acknowledgments of those amounts which, by reason of section 8 of the law on drawbacks of taxes for the export of ardent spirits on which the duty is incumbent, no matter whether or not these acknowledgments are executed by adding the word "acquit" on the official order for payment or by means of a separate document, as well as the indorsements added to the aforesaid official orders for payment, are subject to the fee according to Scale II, the same as the acknowledgments of the amounts of drawback due to the agricultural distilleries by reason of section 7 of the law. (Decree of the ministry of finance of January 19, 1891.)

Change in the assignment of the tongs presses to the officials controlling the revenues on ardent spirits.

In partial change of the decree of the ministry of finances of April 28, 1889, it was ordered that in future in certain intervals also a change in the assignment of the tongs-presses to the officers of the technical control of the revenue of ardent spirits should take place. (Decree of the ministry of finances of March 13, 1891.)

Application of the official fastening on casks for transportation.

In partial change of the decree of the ministry of finances of August 11, 1888, with reference to the official fastening of wooden casks destined for the transportation of ardent spirits, upon which the consumption tax remains payable, as well as with reference to the sealing material hereby to be used, the following is ordered—

1. In order to facilitate the official fastening of such casks for transportation of spirits, the bungholes of which are not provided with an iron ring (tin box), the fastening can be applied either—

(*a*) In the manner indicated in point *i* of the above-cited decree, i. e., so that by means of a center bit a depression on the bung of the cask is bored in such manner that the one-half of it is found on the bung, but the other half in the stave; or,

(*b*) The fastening can be effectuated by means of a bung of proper length driven into the bunghole only so far that it still projects 1-1½ cm. above the plane of the staves. The projecting bung is then sawed through to its center horizontally with the plane of the staves, and the undersawed part is knocked off by means of a burr chisel or any other sharp instrument. On the plane *a*, *b*, *c*, *d* hereby produced

and illustrated by the opposite design, a sufficient quantity of sealing material must be applied in such way that a part of the new bung plane, as well as also the stave, is covered by the sealing material. After the impression of the official seal some oakum or cotton is laid over the cooled seal A (in the design), and over it a little tin sheet is nailed. The fastening *b*, here represented, has the advantage that the elevated part of the bung forms a natural protection for the seal when the cask is rolled. This protection is still further secured when the cask to the right and to the left of the bung is provided with wooden rolling hoops.

2. But, on the contrary, with those casks for transportation the bung-holes of which are protected by an iron ring (tin box), to which the sealing wax sticks with difficulty in applying the official fastening, the following process must be observed, viz: That by means of the center-bit, to the right and left of the bung in the direction of the bottom of the cask, as also in the bung itself, proper depressions must be bored, into which depressions the wire cord must be sealed. The seals applied must likewise be protected by oakum, cotton, or a rag, and a little tin sheet nailed over them.

In this mode of fastening, to avoid the boring by the supervising officers, it may be recommended that necessary depressions to the right and left of the bung, to the depth of 2 mm., be made by the cooper when making the cask.

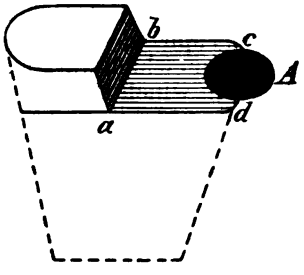

3. In place of the fastening (sealing) material mentioned in the decree of the ministry of finances of August 11, 1888, and used up to this time, in the future the yellow fastening material, L quality, invented by Gottlieb Hess, of Vienna, is to be made use of. The same is a composition of carnauba wax, ceresin, caoutchouc, and minium. The price of this sealing material amounts to 1 florin and 25 kreutzers per kilogram, and the same is to be obtained through the board of economy of the direction of finances of the Empire in Vienna, in compliance with the decree of the ministry of finances of October 10, 1890, subsequently issued.

In the application of this sealing material the controlling officials must act according to the following instruction:

The seal affixed by using the Hess sealing material sticks and remains better the hotter the mass and the rougher the plane is, upon which it is to be placed. Therefore, particularly with the manner of fastening previously described under point 1, lit. *b*, at first the plane of the bung must be covered with the sealing material and that of the stave roughened up so that as many woodchips as possible stand upright. Then, when the process of applying the fastening is to be carried out on a horizontal plane, the sealing mass, previously heated up almost to boiling in a tin vessel, is to be poured over such plane with a ladle previously warmed, and immediately to be imprinted with the sealing stamp (signet stamp) previously well moistened with water or cold alcohol.

When the official fastening has to be applied on vertical planes (on the spigot holes of the casks) the sealing stamp, previously well moistened with water or with cold spirits, is to be dipped into the warmed sealing mass and immediately to be imprinted on the plane, properly roughened, which is to be sealed. The sealing stamp should be dipped

into the sealing mass not deeper than is necessary in order to moisten the stamping surface of the same. In order to obtain a better density as also a greater durability, it is recommended, in sealing the bungs by the application of the fastening mentioned under point 1, lit. *b*, to underlay the bung with a rag of rough linen before it is driven in.

For the sake of avoiding danger from fire the controlling officials, in warming the sealing material, must proceed in the sense of the decree of August 11, 1888.

Whereas, since the precautions contained in the decree of the ministry of finances of April 7, 1889, have been observed, no complaints of the parties over damages done to the casks by the application of the centerbit have been made; therefore, it is strictly enjoined upon the controlling officials to further observe these measures, i. e., the proper shortening of the pin of the centerbit, the insertion of the pin in boring the depressions in the bung of the cask, frequent sharpening of the borer and cautious handling of the same, and finally the using again of the depressions which are already existent in the staves of casks that have repeatedly been used for transportation. (Decree of the ministry of finances of August 20, 1890.)

Inspection sheets.

Also in the industries, mentioned in section 75 of the excise law for ardent spirits, which are solely engaged in the refining or changing of spirits on which duty has been paid, inspection (review) sheets must be kept, in which the result of the inspection or search must be shortly stated.

The sheets of inspection are to be closed monthly, and, together with the second copies of reports which, according to section 76 of the law and section 29 of the executive ordinance, should be filed monthly by the manufacturers above mentioned, are to be collected at the close of the respective month and forwarded to the financial board of the first instance for examination. (Decree of the ministry of finances of October 6, 1890, executive ordinance No. 47.)

Examination of the distillery registers.

By the decree of the ministry of finances of May 22, 1891, the attention of the financial board of first instance under reference to section 39 of the instruction for the excise law on ardent spirits, was called to the fact that the examination of the distillery register is of special importance, because the activity of the officials for technical control can easiest be judged from the entries made in the registers. At the same time it was ordered that the performance of the examination be made conspicuous in every distillery register by a clause having regard thereto. (From decree of the ministry of finances, May 22, 1891.)

The considerable number of ordinances, explanations, and decisions of principle issued as supplementary to the spirit tax law of June 20, 1888, have caused a general want to be felt for a systematic and reliable collection of the enactments relating to the taxing of spirits.

The present book is to fill that want. It has been arranged in such way that to every legal enactment all the pertinent ordinances, decisions, and explanations have been added, so that even one who is not very familiar with the spirit tax legislation can easily gain a complete command of all the enactments touching the subject in question.

In order, furthermore, to render the value of this book permanent, it is intended every year, before the beginning of every operating period, to publish a supplementary volume which, referring to the pertinent passages of the present collection, shall contain all ordinances and decisions of principle passed by the ministry of finances in the meantime relating to the taxation of spirits.

It is evident, of course, that decisions and ordinances of a confidential character could not be introduced into this book.

Introduction.

The state tax on spirits was introduced with the consumption tax law of the year 1829, promulgated in all the lands of the Austrian Empire with the exception of Dalmatia and the islands of the Quarnero. According to this the following persons were obliged to pay the tax:

(*a*) In the country, all those who sold distilled spirituous liquors at retail—that is to say, in quantities of less than half a Lower Austrian eimer (barroom tax).

(*b*) In towns declared closed, those who produced distilled spirituous liquors or imported them across the lines of the town (tax on articles).

The tax per Lower Austrian eimer[1] was as follows in conventional coin:

	Florins.[2]
1. For rum, arrack, liqueur, and all sweetened spirituous beverages:	
(*a*) In Vienna, for the production and importation	9
(*b*) In all other closed towns	6.45
(*c*) In open countries, for the consumption or the sale	4.30
2. For spirits of at least 55 per cent alcohol:	
(*a*) In Vienna	7.30
(*b*) Lemberg	6
(*c*) In the other closed towns	6.45
(*d*) In the open country in Galicia	3
(*e*) Elsewhere in the open country	4.30
3. For spirits of less than 55 per cent alcohol:	
(*a*) In Vienna	5.30
(*b*) In the other closed towns, including Lemberg	4
(*c*) In the open country in Galicia	2
(*d*) Elsewhere in the open country	3

The collection of the tax was made as a rule by way of fixation with the taxpayers, and the tax was to be paid according to the schedule only if no fixation was effected. In the latter case the tax for the most part was assessed. The taxable factor was the performance of a distillation or the introduction into a cellar, or the importation over the lines of the town.

Already in 1830 the above law began to be reformed, and finally these reforms led in 1835 to the extension of the production tax to the open country.

A decree of the sovereign on August 14, 1835,[3] ordered the general taxation of distilled spirituous liquor on production in the provinces where the consumption tax existed, with the exception of Tyrol and Vorarlberg, and the tariff assembly district in the Illyrian coast land. At the same time the barroom and retail tax was abolished.

The tax was levied:

1. According to the capacity of those vessels in which the fermentation requisite for the production of spirits was to take place (mash-space tax), and was classified as follows:

(*a*) In the employment of farinaceous substances, at 9 kreutzers.[4]

[1] The eimer of Vienna is equivalent to 14.95 gallons.
[2] The old florin was equivalent to 50.54 cents.
[3] Collection of Political Laws, 1835, vol. 63, p. 338.
[4] The old kreutzer was equivalent to 84.23 cents.

(*b*) In the employment of seed fruit, also of hulls of grapes, berries, and brewer's offal, at 9 kreutzers.

(*c*) In the employment of stone fruit, wine, wine yeast, wine and fruit must, at 13½ kreutzers conventional coin for every Lower Austrian eimer of the fermenting space.

In the case of using a mixture of these substances the tax was to be paid according to the higher rate.

2. According to the quantity and strength of the product, in cases where the offal of sugar refineries, sugar potatoes, or grain sirup, or other concentrated liquids of higher sugar content were used. For every Lower Austrian eimer at an alcoholic content not exceeding 20° Beaumé at a mean temperature (plus 10° Réaumur) the tax was 3 florins of conventional coin; at higher degrees of alcoholic content the tax increased for each 5° by 45 kreutzers of conventional coin for every eimer.

Furthermore, at the importation from Tyrol and Vorarlberg an addition of 3 florins of conventional coin to the consumption tax (on importations from Hungary or from abroad this was additional to the customs) was levied. The following persons were exempted from the payment of the consumption tax:

1. Anyone producing not more than one Lower Austrian eimer of spirits in the course of one administrative year from substances of his own production and for his own use (untaxed spirit production).

2. Anyone engaged only in the rectification or in the preparation of liqueurs, etc., from spirits already taxed.

3. Importations into the capitals of provinces.

In the case of taxation according to the capacity of the fermenting vessels the taxable act began either at the introduction into the fermenting vessels or at the preparation of the mash, and in cases where the tax was estimated according to the quantity and strength of the product the taxable act began with the lighting of the distilling apparatus.

The mash period—that is to say, the space of time at the end of which the mash has to be taken out of the fermenting vessel and transferred to the distilling apparatus—was not permitted to be less than twenty-four hours from the moment of introduction of the substances into the mash vat or fermenting vessels. A longer space of time required special permission. The duration of distillation was ascertained by the authorities for every distilling apparatus.

The provisions of this law remained in force on the whole up to 1862, only a few of its ordinances being modified by regulations enacted in the meantime.

The decree of March 20, 1840, extended the drawback on exportation that existed only for Galicia to the other Crown lands.

The drawback amounted to 2 florins and 15 kreutzers of conventional coin per eimer of spirits of 75 per cent.

In 1849,[1] for the purpose of raising the revenues of the State, providing for uniform taxation, and gradually removing the partition lines within the Empire, it was ordered that in all the Crown lands in which the consumption tax was to be collected at the moment of production the following dues were to be paid in convention coin:

(*a*) In the use of farinaceous matter (beets and molasses), 10 kreutzers.

(*b*) In the use of seed fruit, also of roots, grape hulls, and brewers, offal, 10 kreutzers.

(*c*) In the employment of stone fruit, also of wine, wine yeast, wine 15 kreutzers.

[1] Decree of the ministry of finances of October 21, 1849. Imperial Law Sheet No. 426.

These taxes were to be paid on every Lower Austrian eimer of mash space:

(*d*) In the use of refuse of sugar refineries (with the exception of beet molasses), of sugar, potato, and grain sirup, and other concentrated liquids of higher sugar content than that of the materials mentioned under *a* to *c*, and finally in the use of starch flour, 3 florins for each Lower Austrian eimer of the distilled spirituous liquor produced if the alcoholic content was less than 21° of the official scale, an imitation of the Beaumé scale, at plus 10° Réaumur. At higher degrees the dues were calculated as follows: At an alcoholic content of 21° and below 25°, at 3 florins and 45 kreutzers; at an alcoholic content of 25° and below 30°, at 4 florins and 30 kreutzers; at an alcoholic content of 30° and below 35°, at 5 florins and 15 kreutzers, and so on, with an additional payment of 45 kreutzers with every increase of alcoholic content by 5°.

(*e*) In the simultaneous use of substances the dues were fixed according to the higher rate.

(*f*) On importation from abroad from the territories outside of the customs line, and from the countries in which the production was not introduced without regard to the degree of strength, 4 florins and 30 kreutzers, conventional coin, for the Lower Austrian eimer, exclusive of customs.

The consumption-tax line between Silesia and Galicia, as well as the additions on importations from Galicia, from Bukowina, and the territory of Cracow into the other Crown lands in which the consumption tax was levied, were abolished on January 21, 1850.

By sovereign decree of September 6, 1853,[1] the amount of tax on the Lower Austrian eimer of mash space in the case of the substances mentioned above under *a*, *b*, and *c*, was raised respectively from 10 to 15 kreutzers and from 15 to 21 kreutzers. The other rate remained the same.

By edict of the ministry of finances of July 14, 1856,[2] the tax on distilled spirituous liquors was introduced in Tyrol and Vorarlberg according to the principles existing in the other Crown lands. The provision allowing untaxed production of spirits for one's use in Tyrol and Vorarlberg was contained in the decree of the ministry of finances of July 23, 1856.[3] By virtue of sovereign decree of August 28, 1856,[4] the amount of consumption tax on the production of distilled spirituous liquors was changed again as follows:

(*a*) In the use of farinaceous substances, of beet and beet molasses, at 18 kreutzers.

(*b*) In the use of seed fruit, also of root and brewers' offal, at 12 kreutzers.

(*c*) In the use of grape hulls, at 9 kreutzers.

(*d*) In the use of stone fruit, also of wine, wine yeast, wine and fruit must, at 18 kreutzers of conventional coin; on all the above for every Lower Austrian eimer of mash space.

(*e*) In the use of offals of the sugar refineries, etc., at 3 florins for the Lower Austrian eimer, of 40 mass of the distilled spirituous liquor produced, if the alcoholic content was less than 52.5° of the centigrade alcoholometer scale at plus 12° Réaumur.

With an alcoholic strength of 52.5° up to less than 65°, the tax was fixed at 3 florins and 55 kreutzers; of 65° to less than 77.5°, at 4 florins

[1] Imperial Law Sheet No. 178, of 1853.
[2] Imperial Law Sheet No. 130, of 1856.
[3] Imperial Law Sheet No. 142, of 1856.
[4] Imperial Law Sheet No. 163, of 1856.

and 30 kreutzers; of 77.5° to less than 90°, at 5 florins and 15 kreutzers, and of 90° up to 100°, at 6 florins of conventional coin.

These ordinances went into effect in Tyrol and Vorarlberg on November 1, 1856; in the other lands on October 1, 1856.

To this was added in 1859[1] the extraordinary addition of 20 per cent. The potato rot having appeared in some of the Crown lands a sovereign decree of September 5, 1860,[2] in order to facilitate the utilization of the product of the soil under reserve of the tax reform in course of preparation, granted to those distillers of spirits who employed diseased potatoes in regions visited by the potato rot, the tax of the spirits produced from those potatoes according to quantity and strength of product under definite conditions for the operating period of 1860–61. In order to ascertain the quantity, receiving vessels were used, and the tax was estimated at 6.3 kreutzers of Austrian currency per Lower Austrian eimer and per degree of centigrade alcoholometer, together with an addition of 20 per cent.

With the law of July 9, 1862, Imperial Law Sheet No. 45, the taxation of the product was substituted in all distilleries with the exception of the so-called smaller distilleries. The quantity and strength of the product were ascertained by means of an officially tested mechanical measuring apparatus and the centigrade alcoholometer. The rate of tax was 6 kreutzers per eimer and 10.7 kreutzers per hectoliter and degree of alcoholic strength, with an additon of 20 per cent. On exportations beyond the customs line a drawback of 6 kreutzers per eimer and degree, together with 20 per cent, was accorded. The smaller distilleries continued subject to fixation, and where no fixation was effected the tax on mash space remained in force.

From February 1, 1866, to January 1, or August 1, 1868, the only method of taxation of distillery was by the aggregate; the rate of tax, together with the addition, was 6 kreutzers per eimer ($10\frac{7}{10}$ kreutzers per hectoliter and degree of alcohol). The drawback on exportation beyond the customs line was only 5 kreutzers per eimer and degree of alcohol, together with an addition of 20 per cent.

In the case of larger distilleries using fermenting vessels of a capacity of at least 30 eimers, the daily aggregate was estimated at one-third of the capacity of the fermenting vessel, assuming an alcoholic output of 6.5° per eimer of the fermenting space. The smaller distilleries were charged with an aggregate according to the average of their payment of taxes during the last five years, deducting 5 per cent.

From January 1, 1868, the smaller distilleries, and afterwards those that used other than farinaceous material or sugar molasses, were allowed to effect a fixation according to the quantity and strength of their product, the rate of tax of 6 kreutzers per degree being applied.

Where a fixation was not effected, the mash-space taxation became operative. With the law of March 28, 1868,[3] the tax drawback on exportations beyond the customs line was lowered to 5 kreutzers per eimer and degree of alcohol. In regard to the larger distilleries the law of July 8, 1868,[4] changed the estimate of the aggregate on August, 1868, to this effect, that the daily aggregate in the use of molasses was based on two-thirds and in the use of other materials on one-half of the fermenting space and on an alcohol output of 7° per eimer, and in the use of raw beet an alcohol output of 6°, while the rate of tax together

[1] Imperial ordinance of May 17, 1859, Imperial Law Sheet No. 89.
[2] Edict of the ministry of finances, September 7, 1860, Imperial Law Sheet No. 206.
[3] Imperial Law Sheet No. 24.
[4] Imperial Law Sheet No. 90.

with the addition (6 kreutzers per eimer and degree of alcohol) remained unchanged. The drawback on exportation was raised again to 6 kreutzers per eimer and degree of alcohol.

In consequence of the introduction of the measures and weights with the law of May 18, 1875,[1] the rate of tax for the aggregate estimate of tax according to the capacity of the fermenting vessel and for the fixation of the spirit tax was fixed at 10.7 kreutzers per hectoliter and degree of alcohol, while the taxation for mash space was fixed as follows:

1. According to the capacity of the fermenting vessel on every hectoliter—

(*a*) When using farinaceous substances, beets, and molasses, at 66 kreutzers.

(*b*) When using seed fruit, root, and brewers' offal, at 44 kreutzers.

(*c*) When using grape hulls, at 33 kreutzers.

(*d*) When using stone fruit, also wine, wine yeast, wine and fruit must, at 66 kreutzers.

2. According to the quantity and strength of the product when using substances of higher content in sugar, or when using starch flour, at 10.7 kreutzers for every hectoliter and degree of alcohol.

The tax drawback on transportation beyond the customs line was 10.7 kreutzers per hectoliter and degree of alcohol.

The law of June 27, 1878,[2] raised the rate of tax from 10.7 kreutzers to 11 kreutzers per hectoliter and degree of alcohol, and established a three-fold mode of taxation of the distilleries, namely:

1. The estimate of the aggregate and in particular according to the capacity either—

(*a*) Of the mash space; or,

(*b*) Of the distilling apparatus.

2. The fixation.

3. The taxation according to the quantity and strength of the product on the basis of the indication of an official measuring apparatus.

The estimate of the aggregate according to the capacity of the mash space was applied to those distilleries which either—

1. Had in their mash vessel a total taxable capacity exceeding 17 hectoliters, whatever might be the number and the nature of this distilling apparatus; or,

2. Even if this capacity did not exceed 17 hectoliters, if they had a steam distilling apparatus or several distilling apparatuses, with direct firing, and though having only one distilling apparatus, yet that one not of the simplest construction, or of a capacity exceeding 2 hectoliters.

In this estimate of the aggregate a daily output of alcohol of 4 hectoliters and degrees were used as a basis when beets were used; 5 hectoliters and degrees in the case of farinaceous substances, and 6 hectoliters and degrees in case of molasses and substances regarded as equivalent to molasses.

Special privileges were enjoyed by certain agricultural distillers, the aggregate of which was estimated according to the capacity of the mash space and in which the mash tax daily did not exceed 35 or 45 hectoliters, 20 per cent, or in the latter case 10 per cent of the ascertained alcohol output being remitted.

The estimate of the aggregate according to the capacity of the distilling apparatus was applied to those distilleries which either—

1. Use farinaceous substances, beets, or molasses, or substances equiv-

[1] Imperial Law Sheet No. 84.
[2] Imperial Law Sheet No. 72.

alent to these and having a taxable capacity of the mash vessels not exceeding 17 hectoliters; possess only a distilling apparatus of the simplest construction, with a distilling boiler of not more than 2 hectoliters; or,

2. Use other than the above materials.

In the estimate of the aggregate according to the capacity of the distilling apparatus, the quantity of mash that could be distilled in the distilling apparatus per day (in twenty-four hours) was assumed, according to the nature of the distilling apparatus, at three times, four times, etc., of the capacity of the distilling boiler. The alcohol output was estimated for every hectoliter of mash—

(*a*) When using farinaceous substances, beets, molasses, and substances equivalent to these, at 4 hectoliter degrees of alcohol.

(*b*) When using stone fruit, wine, wine sediment, wine or fruit must, also grape and honey water, at 3 degrees.

(*c*) When using seed fruit, berries, root, hulls of grape, and brewers' offal, at 2 degrees.

Fixation may be made—

1. In the case of distilleries that were conducted by owners of the ground using only fruit produced by themselves, or grape hulls, or wine yeast, or root, or wild fruit, and employing a distilling apparatus of the simplest kind, having at most a boiler capacity of 2 hectoliters.

2. In the case of distilleries conducted by beer breweries, in which only the offal of their own beer production was used.

Finally, the taxation of the product might be obtained by the managers of distilleries without distinction if they submitted to certain conditions prescribed by law. The tax drawback was 11 kreutzers per hectoliter degree of alcohol.

The law of May 19, 1884,[1] which became operative on October 1, 1884, introduced the following changes in the provisions of the law of June 27, 1878:

1. Besides the modes of taxation enumerated above, taxation without official measuring apparatus according to quantities and alcoholic content of the product was introduced for distilleries that used the offal of wine (hulls of grape, etc.) and produced tartrates at the same time with the distillation of spirituous liquor.

2. In the estimate by aggregate, according to the capacity of the mash space, the daily alcoholic output thereafter ensuing was used as the basis, namely, 5½ hectoliter degrees when using beets, 6½ hectoliter degrees when using farinaceous substances and Jerusalem artichoke, and 7 hectoliter degrees when using molasses and substances equivalent thereto.

The remission for distilleries subject to estimate of aggregate according to the capacity of mash space was fixed—

(*a*) With a daily tax mash space up to 20 hectoliters, inclusive, at 25 per cent.

(*b*) Above 20 and up to 35 hectoliters, inclusive, at 20 per cent.

(*c*) Above 35 and up to 50 hectoliters, inclusive, at 10 per cent.

4. The estimate of the aggregate according to the capacity of the distilling apparatus was applied also to those distilleries which used Jerusalem artichoke. For the rest the distilleries subject to estimate of aggregate according to the capacity of the distilling apparatus might also choose the estimate of aggregate according to the capacity of the mash space for the whole producing period.

---

[1] Imperial Law Sheet No. 63.

In case of estimates of aggregate according to the capacity of the distilling apparatus, the quantity of mash that might be distilled on the distilling apparatus per day (twenty-four hours) was assumed according to the capacity of the distilling apparatus at three times or four times, etc., of the filling space of the distilling boiler expressed in liters. It was assumed that the filling space of a distilling boiler was equal to four-fifths of the entire capacity of the boiler, and if the daily capacity expressed in liters was not divisible by 10 it was rounded off by subtraction.

The output of alcohol from every hectoliter of mash when farinaceous substances, Jerusalem artichoke, beets, molasses, and substances equivalent to them were used was fixed at 5 hectoliter degrees of alcohol, and when pressed seed fruit was used at 1¼ hectoliter degrees of alcohol. In the case of the alcoholic output of the first-mentioned group the distilleries using farinaceous substances were granted under certain conditions a remission of 20 per cent.

5. Fixation might be used—

(*a*) In distilleries which used not more than two distilling apparatuses of the simplest kind, having together at most 4 hectoliters of boiler capacity, if the distillers were owners of real estate, and used fruit produced by themselves, or grape hulls and wine yeast from their own crop of grapes, or berries, or roots, or other wild fruit for the production of spirits.

(*b*) In distilleries in which farinaceous substances were used if only one distilling apparatus of the simplest kind of at most 2 hectoliters of boiler capacity was used in them, and if, moreover, the legal requirements were satisfied, and if farmers were the distillers who carried on that industry for the purpose of obtaining swill wherewith to feed their stock. In this case fixation might be employed for that distilling industry which was carried on for a period of eight months, beginning in September, October, or November.

(*c*) In distilleries without regard to the quality of the distilling apparatus if they were carried on by beer brewers who used only the offal of their own beer production—with the exception of spoiled beer—for the production of spirits.

6. To the taxation of the products according to the quantity of the product on the basis of the indication of a controlling measuring apparatus, assuming an average alcoholic content of 75° of the official alcohol meter, those distilleries, the mash vessels of which had a total capacity exceeding 50 or respectively 35 hectoliters were obliged to be subject, according as they were agricultural distilleries or not, and also those distilleries which used cellulose. All the other distillers were, moreover, given the choice of paying their tax according to this mode of taxation.

Under certain legal conditions agricultural distilleries were granted a remission in the alcoholic content taxable under the taxation of the product. The remission was as follows:

(*a*) Twenty per cent of an average production of not more than 3½ hectoliters of distilled spirituous liquor for every day of the monthly period reported.

(*b*) Ten per cent for an average production of over 3½ up to 5 hectoliters, inclusive; other distilleries too, the productions of which on an average per day of the monthly period reported did not exceed 3½ hectoliters of distilled spirituous liquor were granted a remission of 5 per cent.

On exportation across the customs line the consumption tax of 11 kreutzers for every hectoliter degree of alcohol, together with an addition of 10 per cent for the loss by storage, transportation, etc., was refunded.

The need for an increased State revenue, as well as the fact taught by experience that the system of estimate by aggregate in itself is not apt to lead to a satisfactory result, finally led to the consumption tax at present in force, in which the product is ascertained already in the distilleries according to quantity and strength, but the tax is paid on passing into consumption. Only in case of the smaller distilleries, which for the most part use fruit, husks, etc., the estimate by aggregate, according to the capacity of the distilling apparatus or the fixation, was retained, because, on the one hand, the ascertaining of the real product in these distilleries would meet with the greatest difficulties, and because, on the other hand, the cost of control would be comparatively high.

The Government bill, together with argument relating to this matter, is contained in supplement 500, tenth session, of the stenographic record of the House of Deputies, while the report of the spirit-tax committee, in which the departures from the Government bill are argued, forms supplement 631 of that record.

Finally, it may not be amiss to mention at this place the relation existing in regard to the spirit tax between the Kingdoms and lands represented in the Imperial Diet and the lands of the Hungarian Crown and Bosnia and Herzegovina.

The legislation regarding the spirit tax concerned an indirect tax closely connected with the industrial production, and therefore belongs to those matters which, in the sense of section 2 of the law of December 21, 1867,[1] relating to the matters common to all the lands of the Austro-Hungarian Monarchy and the manner of their treatment in both halves of the Empire, are not, indeed, to be administered in common, but to be treated according to the same principles to be agreed on from time to time. Accordingly, article 11 of the customs and commerce alliance[2] contains the provisions that the spirit tax, during the continuance of the alliance, shall be treated according to identical laws and administrative regulations agreed on, which can only be changed by common agreement. In harmony with these principles, the spirit-tax laws of Austria and Hungary agree in their provisions, with the exceptions of a few departures due to special penal revenue legislation; and the executive provisions to these laws are fixed by mutual agreement of the ministries of finance of the two halves of the Empire. Furthermore, in order to guard the agreement in the management of the identical spirit-tax regulation, each of the two ministries of finance have the right, in the sense of paragraph 2 of article 11, cited above, of the tariff and commerce alliance, to inspect from time to time the course of business, with the aid of the superintending and collecting authorities of the other half.

---

[1] Imperial Law Sheet, No. 146.
[2] Law of June 27, 1878, Imperial Law Sheet, No. 62.

CHAPTER III. SECTION 56 OF THE LAW AND SECTION 16 OF THE EXECUTIVE ORDINANCE.[1]

Alcoholometer, saccharometer, and thermometer for the use of the financial officials.

SEC. 56. In the distillery districts the following instruments, in complete working order, must be on hand, and upon request be placed at the disposal of the financial officials assigned to the surveillance of the distillery:

(*a*) A centigrade alcoholometer of the prescribed kind;

(*b*) A saccharometer prescribed for the revenue officials, both instruments provided with the certificate of approval, and

(*c*) A Réaumur thermometer.

For the ascertainment of the alcohol content, alcoholometers are to be used—

(*a*) With a scale of 5 to 70 degrees, upon which each degree is subdivided into halves, or

(*b*) With a scale of 65 to 100 degrees, upon which each degree is subdivided into fifths.

The alcoholometers of this kind, gauged according to the provisions of the gauge order, have a total length of at most 440 mm. The length of the division must not be smaller than 200 mm., the distance of the uppermost division stroke from the place where the body of the areometer is closed by melting not less than 10 mm., the distance of the uppermost division stroke from the cupola of the shaft [tube] not smaller than 10 mm., and the diameter of the shaft [tube] not smaller than 5 mm. The thermometer melted in [closed by melting] is permitted to bear a scale only reaching from −10° to +30° Réaumur, and be marked only between 38° and 42°. To each instrument, besides the gauge certificate and the reduction table, a certificate of finding must be added by which it is confirmed that the gauged instrument complies with the above requirements.

As immersing vessels glass cylinders are to be used which have at least a height of 50 cm. and an interior diameter of 70 mm.

Alcoholometers of the above designated kind are to be procured through the financial boards of the first instance at cost.

CHAPTER III.

Provisions with regard to the removal of spirits from the place of production without payment of the consumption tax.

SEC. 69. The proprietor of the distillery or of the free storage house must pay the consumption tax incumbent upon the spirits removed, together with a fine of 5 to 200 florins, when the spirits do not arrive at the free storage house reported or have not passed the customs line within the time reported by the consignor and proportionate to the circumstances.

This duty of payment does not apply to that quantity of alcohol which is proved to have gone to waste during the transportation.

As for the rest, during the transportation of spirits upon which the

[1] Law, article 24, of the year 1888, contained in the collection of laws published by the royal Hungarian minister of the interior for 1888, p. 564, etc.

consumption tax is payable, those provisions are to be imposed which apply with regard to the transportation of consigned foreign goods on which custom duty has not been paid.

A. When spirits with the consumption tax payable thereon are transferred into a free storage house for spirits.

(1) Every removal of spirits upon which the consumption tax is payable from the place of production into a free storage house for spirits must be reported in duplicate papers, according to the annexed form (sec. 24, II A., cl. 1, of the executive ordinance), to the financial official intrusted with the surveillance of the distillery.

(2) With the report the consignor assumes the obligation to present the spirits more accurately designated in the report in unchanged condition and quantity within the destined period to the financial official intrusted with the surveillance of the free storage house, to pay the consumption tax accrued for the relative quantity of alcohol, together with the fine fixed in section 69 of the law, if and in so far as the quantity of alcohol in question has not arrived at the free storage house unless it be proved that it has gone to waste during the transportation.

For the fulfillment of this obligation the consignor must give security proportionate to the accrued amount of the tax in the manner prescribed, which bond need not always be renewed, but becomes released upon confirmation of the correct arrival of a consignment for which the security was given, at the place of destination.

This security may also be given for several consignments and for the duration of the entire period of production.

With free storage houses, since the proprietor at the time of establishing the free storage house must give the financial administration a proportionate security, the special security for this reason is not to be demanded.

This security, besides the manner prescribed for the crediting of the consumption tax, may also be given by the bond of a solvent bondsman.

* * * * * * *

The proprietors of free storage houses for spirits, as also the proprietors of spirit refineries declared as free storage houses, may, as a rule, be regarded as satisfactory bondsmen with reference to the spirit consignments to be forwarded to them.

* * * * * * *

(3) Every removal of spirits under the bond of the consumption tax must be officially supervised and proved.

* * * * * * *

If he to whom the spirits with the consumption tax payable thereon is consigned is not allowed to accept the consignment because he does not possess the license for a free storage house, or because the reception of the consignment into his free storage house is not admissible, or if the acceptance is refused, then the consignor is obligated to pay the consumption tax inside of a fortnight after he has received the demand for pay, to avoid execution. If the spirits are taken back without payment of the consumption tax or are brought into another free storage house, then report thereof must be made to the next financial official.

CHAPTER III, SECTIONS 67, 68, AND 69.

B. When spirits are exported beyond the customs line with the reservation of the release (crediting) of the tax.

The removal of spirits on which the consumption tax is incumbent beyond the customs line is regulated by the prescription contained in Appendix A of the executive ordinance (Supplement II of this collection).

C. When spirits are destined for any other use exempt from duty.

The removal of spirits on which the consumption tax is payable for any other use exempt from duty is regulated by Appendix D of the executive ordinance (Supplement III of this collection). The provisions relating to the removal of spirits on which the consumption tax is payable from a free storage house are contained in Appendix C.[1]

ESTABLISHING THE CONSUMPTION TAX.

(a) In the distillery.

SEC. 70. For each distillery falling under the consumption tax, an account of this tax is kept.

To the same there must be entered as debit the entire amounts of production, respectively, the quantity of alcohol contained therein. On the contrary, there are credited [released, canceled]:

(*a*) The quantities of alcohol on which the consumption tax has been paid either in cash or by making use of crediting;

(*b*) The quantities of alcohol which, together with the consumption tax incumbent thereon have been transferred into a free storage house for spirits, or have been exported beyond the customs line, or

(*c*) Have been removed for use exempt from duty;[2]

(*d*) The storage shrinkage, and when the spirits are refined or rectified in the distillery itself, also the refinery shrinkage within the limits designated by the way of ordinance.

With regard to the shrinkage which occurs with spirits that are subjected to a further working for the purpose of fruition (or ageing), a remission of the consumption tax up to 5 per cent may be granted by the Government.[3]

(b) In the free storage house for spirits.

SEC. 71. Also for each free storage house for spirits an official account of the consumption tax is kept.

In the same there must be entered as debit—

(*a*) The quantities of alcohol received upon which the consumption tax is still payable.

(*b*) The quantities of alcohol received upon which the consumption tax is not payable.

---

[1]Printed under section 73 of the law, p. 143 of the collection.

[2]The spirits destined for use free of duty must be removed from the place of production and from the refinery declared as a free storage house, respectively, before the release [crediting] in the account can take place; also the methylation of same, forming a condition of the use exempt from duty, must not be performed in the place of production or in the refinery declared as free storage house itself. (Executive decree of September 6, 1888.)

[3]From the closing sentence of section 70, according to which the Government may grant a remission of the consumption tax, it follows that a legal right to the granting of such a remission does not exist.

With regard to the releasing [crediting] the provisions *a*, *b*, and *d* of the preceding section 70 are applicable.

If it relates to a free storage house for spirits locally connected with a refinery of spirits, then the release [crediting] will extend also to those quantities of alcohol which have been removed for use exempt from duty and to the shrinkage connected with the refinery within the limits designated by the ordinance.

CHAPTER III. SECTION 73 OF THE LAW AND REGULATIONS C.

SEC. 73. The more special provisions relating to the free storage houses for spirits, as also the provisions with regard to the use of spirits exempt from duty, will be issued in the way of ordinances.

Regulations relating to the private free storage houses for spirits with consideration for the special provisions for public free storage houses.

(1) Private free storage houses, as a rule, are permitted only at the station of a customs office or of a revenue office. The same are subject to the control of the revenue office.

They are permitted, upon petition and subject to revocation at any time, only to such merchants recorded at the board of trade as enjoy the confidence of the financial administration, and are neither found in bankruptcy, nor have been punished for clandestine trade or for any aggravated violation of the revenue laws, and who live at the very place of the storage house, or at least appoint a proper agent residing there.

The permission for the erection of a private free storage house for spirits, after hearing by the board of trade, will be granted by the ministry of finances when the estimated annual sale of spirits amounts to at least 2,000 hectoliters, and when the applicant obligates himself to conscientiously comply with all the directions made by the financial board which appear to be necessary in the interest of the revenue. The concession for a public free storage house by virtue of section 4 of the law of April 28, 1889, will be granted by the ministry of commerce in concordance with the ministry of finances. For the establishment and operation of public free storage houses, besides the provisions of the law of April 28, 1889, the provisions of the revenue law and the directions made by the financial boards by virtue of them are also authoritative; they may have been made either as previous conditions for the granting of the concession or only subsequently. (Section 2, last division of the law of April 28, 1889.)[1]

In the permission it will also be provided whether any and what amount of indemnification the enterprise is obligated to pay for the costs accruing to the public treasury by its surveillance through the revenue office.[2]

[1] The permissions for free storage houses of every description will be published in the ordinance sheet of the ministry of finances under statement of the office charged with the surveillance of the same.

[2] The obligation to indemnify for the costs of surveillance by the revenue office is consequently a condition of the permission and can not be the object of a recourse. (Executive decree of December 29, 1888.) The accruing costs will be subsequently made known to the proprietor after the close of each month or quarter. If the same are not paid within the properly fixed term, then the outstanding amount must be collected in the administrative way eventually by action upon the security given, and at the same time the completion of the latter must be exacted. (Executive decree of November 24, 1889.) What special indemnifications the supervising officials have to claim, and in what manner the payment to them of the amounts accruing must be made, are likewise provided by the Executive decree of November 24, 1889, by which the rules relating to the surveillance of free storage houses have been published.

If it concerns a public free storage house, then the owner of the storage house must repay to the financial administration the costs which have accrued for the necessary surveillance by the revenue office, such repayments to be published in detail from year to year by the financial administration. (Section 5 of the law of April 28, 1889.)

(2) As private free storage houses for spirits only, such buildings or closed rooms may be used which are recognized by the financial board of the first instance as suitable for the purpose, and in which the spirits can be stored completely isolated from other wares.[1]

A constant surveillance, as also an official joint locking, does not take place,[2] as a rule, upon the condition that in the private free storage house spirits only come to be stored upon which the consumption tax is incumbent.

3. The extent of the responsibility incumbent upon the proprietor of a private free storage house for spirits with regard to the consumption tax on spirits, as also with regard to the fines for violations of the revenue law, is provided by the spirits taxation law (sections 15, 16, and 83).[3]

For the security of the obligations incumbent upon the proprietor toward the financial administration, the former must give security[4] proportionate to the extent of the enterprise, in the manner prescribed for the crediting of the consumption tax, before the opening for operation of the private free storage house, which security in case of necessity may also be increased. The amount of the security must correspond with the full amount of the consumption tax which would accrue from the regular stock in storage.

4. An accurate description of the storage rooms and their connection with the outside, together with a sketch of the plan, must be annexed to the petition for the permission to establish a private free storage house for spirits, which petition must be filed with the financial board.

The probable extent of the annual business of the storage house, and the kind of security to be given must be set forth and the person must be named who will give answer and information to the financial officials at their control visits.

---

[1] Also with public storage houses, by virtue of section 2 of the law of April 24, 1889, in the sense of section 27 I, l. 1, of the executive ordinance, it is required that spirits upon which the consumption tax is incumbent be stored isolated from all other wares, whether or not they be dutiable for customs or for consumption tax.

[2] If, however, the business interests require it, the financial board may ordain that a financial officer must always be present in the building in order to watch the proceedings therein and to intervene at the several official functions.

[3] The name was provided with regard to the public free storage houses in section 27, I, cl. 2, of the executive ordinance.

[4] With regard to the security to be given by the public free storage houses see section 5 of the law of April 28, 1889. In case the security should be given by the assuming of the liability on part of a credit institute, the bond [liability document] in the sense of the Form No. 28 A, of the executive ordinance, would read about in the following manner:

"Mr. ———, as proprietor of the private free storage house for spirits in ———, according to the regulations relating to private free storage houses, is obliged to give security in the amount of ——— as surety for the obligations incumbent upon him toward the financial andministration. The undersigned ——— herewith bind themselves to be liable to the honored exchequer as sureties and payors for the correct and prompt fulfillment of the obligations incumbent upon ——— to repay the financial administration bill to the above-stated amount, together with eventual 6 per cent delay interests and the eventual costs for collection of that amount."

In casual, etc., the amount in every case must be expressed by figures. Decree of the ministry of finance of November 22, 1888, and of December 18, 1888.

Each change in the storage rooms will also be subjected to previous report and approval.

On receipt of the petition the financial board will cause an investigation of the buildings and of the described storage rooms to be held, the result of which must be entered in a record made in duplicate.

One copy of that record, provided with the official approval will be returned to the proprietor for his protection, while the other copy remains in the hands of the financial board.

5. In each private free storage house there must be on hand and be placed at the disposition of the financial officials a centigrade alcoholometer of the arrangement ordained in section 16 of the executive ordinance (p. 96 of the collection), a thermometer according to Réaumur, and an officially gauged standard vessel (10 or 20 liter vessel); furthermore, a scale properly gauged and adapted to the weighing of casks filled with spirits, also gauged iron weights and the implements necessary for the quick filling of the casks.

At the investigations and inspections to be held the proprietor is obliged to give every information and reference required for the sake of control by the revenue office, to the financial officials, and to render them upon their request the necessary auxiliary service at their official functions, either himself or through his employees.

The storage rooms are permitted to be kept open solely through the day—that is to say, in the months from April till October, inclusive—from 6 o'clock in the morning till 7 o'clock in the evening, and in the months from November till March, inclusive, from 7 o'clock in the morning till 5 o'clock in the evening.[1] Exceptions hereto in the case of necessity may be granted by the financial board of the first instance.

6. The introduction of spirits into a private free storage house is performed by virtue of the report for removal of spirits free of duty, being acknowledged by the consigning office.

As soon as an invoice of spirits liable to the consumption tax, consigned to the free storage house, arrives, the proprietor or his agent must immediately make a report in writing to the financial official charged with the surveillance of the free storage house.

7. The financial officials intrusted with the surveillance over the private free storage house receiving the consignment of spirits will ascertain the number, marks, and figures of the packages, examine the official fastenings applied, and state the quantity and the alcoholic content of the spirits for each single package. The stating of the alcoholic content will be done in the manner prescribed in section 24 I, cl. 4, of the executive ordinance. The stating of the quantity will be performed in the manner prescribed in section 24 I, cl. 3, of the executive ordinance when the dispatching at the consigning office had been done according to the gauge mark, and in that prescribed by section 24 I, cl. 5, of the same when the dispatching on part of the consigning office had been done by means of stating the weight.

The ascertainment of the quantity and of the alcoholic content may be omitted when the consignment has arrived, the official fastening being inviolate, and when, also, otherwise no apprehensions of any kind

[1] For public free storage houses the time during which, in general, the storage rooms may be kept open will be published in the regulations to be issued in accordance with section 8 of the law of April 28, 1889. For private free storage houses, in order to diminish the costs for the surveillance, another agreement may be made with the proprietor with reference to the days, eventually to the hours of the day, on which the official functions of the puttings into and the removals from the storage may be performed. (Decree of the ministry of finances of November 24, 1889.)

arise, provided the proprietor of the private free storage house raises no objection. In such a case the quantity of alcohol ascertained by the official at the consigning office will be entered upon the receipt account.

When the quantity of alcohol has been found smaller or larger by not more than 5 per centum than the finding of the consigning office, then penal proceedings are not to be instituted. For the deficient quantity of alcohol, provided the deficiency does not appear justified by the admissible transportation shrinkage, payment must be made for the accruing consumption tax by the proprietor of the distillery, irrespective of the free storage house from which the consignment originates, as soon as the official letter of advice has reached the consigning office in return. Therefore the officials charged with the surveillance of the private free storage house receiving the consignment have to state the deficiency of the quantity of alcohol ascertained, as also the consumption tax due for it, in the discharge of the reports, as also in the acknowledgment of the letter of advice. When the place of consigning is not the seat of the free storage house, and when the quantity of alcohol in the latter has been found less, than in the iron reservoirs by not more than 1 per centum, and less than in casks or other packages by not more than 1½ per centum, then this has to be pretermitted.[1] If the quantity of alcohol has been found less by more than 1 or 1½ per cent, respectively, then for the deficiency surrounding the above-named (1 or 1½) per cent the consumption tax must be collected according to the rate of tax at which the spirits have been dispatched by the consigning office.

With spirits in other packages, e. g., in bottles, a transportation shrinkage is not conceded.

After the ascertainment of the quantity of alcohol is completed the financial officials will place the finding and the receipt item, under which the booking in the receipt register had been made, into the two copies of the report and into the letter of advice.

The entry of the quantity of alcohol into the receipt register is always

[1] When spirits standing under the bond of the consumption tax which are destined for storage in a free storage house (refinery), or for exportation beyond the customs line, or to any other use exempt from duty, are not transported to the place of destiny merely in casks or merely in iron reservoirs, but when during the transportation under observation of the conditions fixed for such case a transfer of the same from the transporting casks into tank cars, or else vice versa, takes place, then in such cases it must be treated as if the consignment had been made in transportation casks only. Therefore, when in such cases on the part of the receiving office, irrespective of the exit office, the quantity of alcohol has been found to be less, the consumption tax will be collected only for the deficiency exceeding the 1½ per cent, according to the tax rate at which the spirits had been dispatched by the consigning office. (Decree of the ministry of finances of January 27, 1889.) For the purpose of ascertaining this transportation shrinkage in the remark column of the report register by virtue of the returned official discharge of the relative report, irrespective of exportation declaration, the transportation shrinkage in so far as it moves within the admissible amount of 1 or 1½ per cent, at each single consignment separately according to the two tax rates represents itself, must be stated. If, however, it should be the case that the deficient quantity of alcohol exceeds the above measure of the admissible transportation shrinkage, and therefore the tax must be paid for that shrinkage, then this deficiency exceeding the admissible measure must be evidenced in a special column beside the admissible shrinkage. If at the delivery of the report register the discharged copy of the report [declaration] has not yet been returned, then the shrinkage is subsequently to be evidenced on the fly leaf of the report register being in use at the time of the return of the documents mentioned under the monthly sum and under annexation of the documents. (Exchequer decree of February 16, 1890.) The shrinkage must always be calculated only according to the quantity of alcohol of the entire consignment. (Exchequer decree of May 13, 1890.)

done in accordance with the official finding to be placed upon the received copy of the report.[1]

The copy of the original report brought in by the consignor must be delivered to the party provided with the acknowledgment of the petition; the copy (duplicate) forwarded by the assigning financial officials, and likewise properly acknowledged, must be annexed as a voucher to the receipt (item of the receipt) register, and the letter of advice, properly acknowledged, must be forwarded to the assigning financial official.

After the performance of these official functions the entry of the quantities of alcohol received upon the official account to be kept of the consumption tax, must be made in accordance with section 71 of the spirits taxation law, with reference to the relative item in the receipt register.

The functions prescribed must be performed by two financial officials charged with the surveillance of the private free storage house.

The officers officiating at these functions must confirm by their signatures and statement of their official character the entries to be made upon the reports, the letters of advice, and other records.

8. The course to be pursued in case of an elementary accident is provided in section 72 of the law (p. 140 of the collection).

The release (crediting) in such cases is always done in favor of the account of spirits subject to the higher tax rate, provided such should be on hand according to the account of the free storage house relating to the consumption tax.

9. With reference to the removal of spirits, for any other use exempt from duty, from a private free storage house into another free storage house, or beyond the customs line, or so far as it concerns a free storage house locally united with a refinery, as also with reference to the paying or crediting of the tax, the relative provisions of the spirits taxation law, and the directions issued hereto, must be observed.[2]

10. With reference to the taking of stock and the shrinkage computation, the directions of section 72 of the law are valid.

11. The right of keeping a private free storage house for spirits will be extinguished—

(*a*) By the voluntary waiving of the concession or by the death of the owner of the storage house.

(*b*) By the revocation of the concession granted, which revocation has to occur especially when the proprietor of the free storage house does not comply with the obligations incumbent upon him, or when the presuppositions under which the concession had been granted (clauses 1, 2, and 3, pp. 143 and 144 of the collection) become void.

---

[1]The receipt register must be concluded monthly, and be sent in to the board of censors by way of the financial board of the first instance. The same was declared as printed matter strictly to be accounted for, by the decree of the ministry of finances of January 22, 1890.

[2]If for public free storage houses the official joint [concurrent] fastening and the keeping of a magazine book are ordained, in which the deposits in storage are singly carried through, then also under the force of the new storage house law of April 28, 1889, the provision of section 27 I, cl. 2, paragraph 3, of the executive ordinance is in force, that when the single casks in which the spirits had been brought into the free storage house are found unchanged, with the official fastening inviolate, at the removal from storage, in so far as for them the same quantity of alcohol is declared which had been ascertained at the putting into storage, the ascertainment of the quantity and of the alcoholic content by taking samples may suffice, provided that no exception arises as to this taking of samples. As a matter of course, in such a case the shrinkage has to be eliminated from the shrinkage account for the quantity of alcohol in question.

The instruction relating to the performance of the official functions in public and private free storage houses for spirits, issued by the decree of the ministry of finances of November 24, 1889, has been printed in Supplement VIII.

In all cases of the suspension of such a free storage house, the officer intrusted with the surveillance of the same must ascertain the entire stock of spirits, and the owner is bound either to pay the tax for the quantity of alcohol ascertained or, as far as the security for crediting suffices, to claim the allowed tax credit, or to export beyond the customs line, or to assign into another free storage house under the bond of the consumption tax; or, when the free storage house is locally united with a refinery, to state any other use exempt from duty. The quantities of alcohol for which the consumption tax had been paid, or with which the crediting of the consumption tax occurs, are left to him for free disposal.

Procurement of fusel oils for industrial purposes.

1. Whosoever wishes to procure refined fusel oils for industrial purposes from a refinery of spirits, be it declared as a free storage house or not, will need therefor a special permit.

2. The permit will be granted by the financial board of the first instance in charge without the demand of security to such persons who authentically use fusel oil as an auxiliary material in their trade, and who are also unimpeachable in regard to the revenue law or otherwise.

3. In the relative petition must be stated:

(*a*) For what purpose the fusel oils are needed.

(*b*) The approximate annual quantity required.

(*c*) The sources of procurement, which, however, may at any time be changed after previous timely report given to the financial board granting the permit.

In this petition at the same time the declaration must state that the petitioner is ready to pay immediately after notice the costs accruing to the public treasury.

4. With reference to the removal of such fusel oils from the refinery of spirits in general the same provisions as for the removal of spirits occurring under the bond of the consumption tax are in force.

Besides this, the fusel oils must be examined with regard to their purity.

The examination is made in this way, that 30 cubic centimeters of a 25 per cent chlorocalcium solution, with 10 cubic centimeters of the oil to be examined, are placed therein and thoroughly shaken in a glass tube of an even width of 1½ centimeters, provided with division strokes, which glass tubes can be procured from the financial board.

If after a complete clearing of the fluid the change in volume of the fusel oil is merely 2 cubic centimeters or less, then the fusel oil must be regarded as pure.[1]

Concerning the proceeding at this examination, the financial officials have been furnished with special instructions. (Executive decree of November 19, 1889.)

[1]The financial officials to whom the fusel oil has been referred from the refinery, at the arrival of the consignment will ascertain number, mark, and figure of the packages, examine the fastenings applied, ascertain the quantity of the fluid, and subject the same to a second reexamination with regard to their purity in the manner mentioned, subpoint 4. Then the same will enter the finding upon the two copies of the report, and in that of the letter of advice, and besides this will proceed the same as in the case of the procurement of alcohol destined for use exempt from duty. If the fusel oil has been found pure, then the same will be delivered without any further control to the party for use. In the contrary case the exception must be taken by the revenue office, and the delivery of the fusel oil in question must be stopped. The official function above mentioned must always be performed by two financial officials. The consignee (recipient) has to bear the mileage and traveling fees for those officials according to the proportion stated. (Exchequer decree of November 19, 1889.)

SUPPLEMENT VIII TO SECTION 73 OF THE LAW.

Instructions relating to the performance of the official functions in public and private free storage houses for spirits.

The free storage houses for spirits are destined to keep spirits on which the consumption tax is payable under official supervision so long as the same will be either subjected to the payment of the tax or will be removed without payment of the consumption tax. The removal without payment of the consumption tax may take place when the spirits—

(*a*) Are transferred with the consumption tax payable on them into a free storage house for spirits.

(*b*) Are exported beyond the customs line under reservation of the tax release.

(*c*) When the spirits are destined for other use exempt from duty; in this case, however, only when the free storage house is locally connected with a spirits refinery.

The free storage houses are either public, that is to say, such as have been licensed by virtue of the law of April 28, 1889, or private, that is to say, such as exist by virtue of a special concession by the financial ministry in accordance with the provisions of the regulations for free storage houses.

The surveillance of the free storage houses by the revenue office presupposes the performance of official functions for the purpose—

(*a*) Of putting into storage consignments of spirits standing under the bond of the consumption tax.

(*b*) Of removing spirits.

(*c*) Of controlling the enterprise.

At the storage of spirits into a public or private free storage house the official function must be performed solely in consequence of the report [notice] filed in writing by the owner of the spirits, and the report made by the consigning office regarding the removal of spirits under the bond of the consumption tax has to serve as a basis for such function.

The official function of putting into storage must be proceeded with strictly in accordance with the provisions of clause 7 of the regulations referring to the private free storage houses for spirits.

The official function itself covers—

(*a*) The acceptance of the original of the report and the comparison of the same with the forwarded duplicate, as also with the letter of advice.

(*b*) The external examination of the consignment, and—

(*c*) The ascertainment of the number, marks, and figures of the packages.

(*d*) The examination of the official fastenings affixed.

(*e*) The internal examination—that is to say, the ascertainment of the quantity and alcoholic content of the spirits.

The quantity of the spirits arrived is ascertained either according to section 24, Division [paragraph] I, cl. 3 or cl. 5 of the executive ordinance, according as the dispatching by the consigning office has been done by the gauge mark or by the weight. Cl. 7, lit. *a*, paragraph 2 of the regulations provides when the ascertainment of the quantity may be omitted.

The alcoholic content of the consignments of spirits is ascertained according to section 24, Division I, cl. 4 of the executive ordinance.

The description of the alcoholometer and of the immersing vessels for

the spirits to be examined with is contained in section 16 of the executive ordinance. When the place of consigning is not the seat of a free storage house, and when at the latter the quantity of alcohol has been found to be less by not more than 1 per cent in iron reservoirs, and by not more than 1½ per cent in casks or other packages, then this has to be accepted. With spirits in other packages, as in bottles, the transportation shrinkage is not allowed.

If a transfusion has taken place during transportation, then the measure of the transportation shrinkage which may be passed by will amount to 1½ per cent.

If the transportation shrinkage is less than the relative rate of per cent, then the actually established one is allowed to be regarded.

In case of a deficiency exceeding the relative rate of per cent, the consumption tax must be collected at the tax rate at which the spirits have been dispatched.

The supervising officials, therefore, have to state the deficiency of the quantity of alcohol established; and the consumption tax due for it, in the discharge upon the reports, as also in the letter of advice.

If the quantity of alcohol is found to be larger or smaller by more than 5 per cent, then, in addition to that, penal proceedings must be instituted.

(*a*) Entry of the finding and of the receipt item, under which the booking in the receipt register is done, into the two copies of the report and into the letter of advice.

(*b*) Closing official functions.

(*c*) Delivery to the party of the original of the report brought by the party, provided with the confirmation of the entrance.

(*d*) Annexation of the duplicate forwarded by the directing financial officials, and acknowledged [confirmed] as exhibit [voucher] to the receipt items of the receipt register.

(*e*) Transmittal of the letter of advice acknowledged to the directing financial official.

(*f*) Entry of the quantities of alcohol accepted upon the official account kept relating to the consumption tax in accordance with section 71 of the law. At the official functions connected with the storage, always two financial officials intrusted with the surveillance of the free storage house have to officiate.

If the proprietor of the free storage house or of the refinery declared as a free storage house for spirits, in accordance with the decree of the ministry of finances of December 9, 1888, has been permitted to render security for the transportation with the financial board of the first instance in the jurisdiction of which this proprietor has his domicile, then, at the storage of the consignment by virtue of this permission into the free storage house, or into the refinery declared as a free storage house, the financial officials intrusted with the surveillance are obliged to make report of the actual arrival of such a consignment of spirits to the financial board of the first instance, by the order of which the acknowledgment of deposition (relating to the rendering of the security) had been executed contemporaneously with the discharge of the copies of the notice under reference to the date and number of the deposition receipt, as also to the notice.

With the decree of the ministry of finances of December 17, 1888, it was furthermore permitted that the security for transportation, besides the kind prescribed for the crediting of the consumption tax, may also be rendered by the joint and separate bond of a solvent bondsman. The proprietors of free storage houses, with regard to the

consignments of spirits to be dispatched to them, may as a rule be considered as competent bondsmen.

Into a free storage house for spirits, which is not found under concurrent fastening, only spirits upon which the consumption tax is payable may be stored.

If spirits, upon which no tax is payable, are brought into a refinery declared as a free storage house, then those spirits must be placed under official joint-lock.

In a refinery declared as a free storage house, neither methylation of spirits destined for use exempt from duty nor the production of liquor must be carried on.

The removal may take place:

I. After payment of the tax.

II. Without payment of the tax.

The official functions, which must be performed at the removal from the free storage house, are therefore different according to these two principal kinds of removal, as also according to the different methods of the removal without payment of the tax.

The official function must exactly be performed in accordance with the provisions of sections 67, 68, and 69, of the law, and of section 24, of the executive ordinance.

(*a*) The acceptance of the report and examination of the same.

(*b*) Entry of the report upon the report register.

(*c*) Ascertainment of the quantity and of the alcoholic content of the spirits belonging to the consignment. The ascertainment of the quantity will be made, as a rule, according to the guage mark, in the manner fixed in section 24, I, cl. 3, of the executive ordinance, under use of the reduction table for computation of the true volume at 12° Réaumur from the volume observed at any other temperature.

If the proprietor of the free storage house demands it, the ascertainment of the quantity may also be performed according to the weight of the spirits, in accordance with section 24, I, cl. 5, of the executive ordinance, under use of the Reduction Table III. The alcoholic content must be ascertained in the manner prescribed in section 24, I, cl. 4, of the executive ordinance, under use of the Reduction Table I.

At the removal from a public free storage house, with regard to the ascertainment of the quantity and the alcoholic content, the relief conceded in section 27, I, cl. 2, paragraph 3, of the executive ordinance, may take place.

(*d*) Official treatments of the pay-and-credit certificate.

(*e*) Entry of the finding upon the back of the report, and

(*f*) Dismissal of the consignment from the free storage house.

The official function here adduced under B I, must be performed by a financial official intrusted with the surveillance of the free storage house.

It is remarked that in accordance with section 24, I, cl. 2, of the executive ordinance, the removal against payment of the tax, provided no official appears until the reported time of the removal, may take place also without any intervention. If a financial official finds himself at the time of the removal in the free storage house, that which indeed always will be the case in public free storage houses, then said official must unconditionally intervene.

This removal may take place—

1. For the sake of transferring into a free storage house or into a refinery declared as a free storage house.

2. For the sake of exportation beyond the customs line.

3. For the sake of use exempt from duty, though in that case only when it concerns a free storage house locally combined with a refinery.

This official function must be performed according to sections 66 to 69 of the spirits revenue law and section 24, II, A, of executive ordinance.

It comprises—

(*a*) Acceptance and examination of the report.

(*b*) Examination whether the proportionate security for the transportation has been given.

(*c*) External investigation, ascertainment of the number, marks, figures, and of the quality of the packages.

(*d*) Ascertainment of the quantity and of the alcoholic content of the consignment in the same manner as with the removal against payment of the consumption tax (Lit. B I, c. of this instruction).

(*e*) Examination of the concordance of the finding with the report or eventually the establishment of the objection.

(*f*) Entry of the finding and of the item, number of the report register after being booked therein, upon the two copies of the report and entering the time of presentation, reported by the consignor and proportionate to the circumstances, into the two copies of the report.

(*g*) Application of the seals. With transportation casks for spirits the fastening must be applied according to the direction of section 36 of the Supplement.

Further directions, particularly for the affixing of official seals, are contained in the decrees of the ministry of finances of November 29, 1853, l. 1127; of February 13, 1857, of October 9, 1859; of January 4, 1881; then of June 1, 1883.

(*h*) Dismissal of the consignment.

(*i*) Closing official function, and—

(*α*) Delivery of the original of the report to the party, and forwarding of the duplicate and of the letter of advice to the receiving office.

(*β*) Notice to the financial board of first instance, when the acknowledged letter of advice has not arrived within the time previously designated, or when the consumption tax for the deficient quantity of alcohol should not be paid within three days after the return of the acknowledged report.

(*k*) Entry upon the account over the consumption tax. At the entire official function always two financial officers intrusted with the surveillance have to intervene.

For the performance of this official function sections 66–69 of the spirits taxation law and Appendix A of the executive ordinance are of special consequence. (Supplement II of the collection.)

The official function comprises—

(*a*) The acceptance and examination of the declaration and entry upon the report register. (Appendix A, Sec. A, cl. 5 and 10 of the executive ordinance; Supplement II, pp. 319 and 320 of the collection.

(*b*) Ascertainment whether the security eventually required has been given, and recording this fact in the declaration. (Appendix A, Sec. A, cl. 5 of the executive ordinance; Supplement II, p. 319 of the collection.

(*c*) External investigation of the number, marks, and figures, and of the quality of the casks and of the other gauged packages. (Appendix A, Sec. A, cl. 10, *b α* of the executive ordinance; Supplement II, p. 319 of the collection.

(*d*) Ascertainment of the quantity and quality and of the alcoholic content in the manner directed in section 24, I, cl. 5 of the executive ordinance for each single cask or package under use of the Reduction

Tables I and III. With reservoir cars also the dead weight of the same must always be ascertained. (Appendix A, Sec. A, cl. 10, β; Supplement II of the collection.

(*e*) Examination of the identity of the finding with the declarations. (Appendix A, Sec. A.)

(*f*) Placing of the finding into the relative columns of the declaration.

(*g*) Affixing the official seal.

(*h*) Entries of the seals applied, then of the item, number of the report, and register under which the consignment has been put on credit, into the exportation declaration.

(*i*) Dismissal of the consignment, fixing of the period for the exit of the consignment.

(*k*) Closing official functions, and—

(α) Delivery of the original of the declaration to the party, and forwarding of the other copies of the declaration to the exit office.

(β) Notice to the financial board of the first instance, when within a fortnight the triplicate has not come back, or when a deficiency exceeding the admissible shrinkage has been established by the exit office.

(*l*) Entry upon the account over the consumption tax.

NOTE.—The particular provisions at the exportation of liqueur and rum made from spirits upon which the consumption tax is incumbent are contained in Section B of the Appendix A, of the Executive Ordinance; Supplement II, p. 325 of the collection.

With regard to this removal, which may only take place from a spirits refinery declared as a free storage house, the provisions apply quoted in section 24 of the executive ordinance, Sec. II, respectively, those of sub B, I, and II, of this instruction, only there must in the reports also be stated the enterprise for which the spirits are destined, as also the date and the business number of the permission for the procurement of the spirits.

(*a*) Receipt register for the quantities of alcohol accepted.

(*b*) Register for the removal of quantities of alcohol subject to the consumption tax from the free storage house which had been done without or upon the payment of the consumption tax.

(*c*) Account of the consumption tax (receipt).

(*d*) Account of the consumption tax (expense).

(*e*) Summary of the storage.

(*f*) Supervision sheets.

(*g*) Inventory of the office for the official requisites (seals, presses, etc.), delivered to the supervising officials. Besides the official records, there must be placed in each free storage house—

(*h*) A copy officially approved of the act of authorization and a description of the respective storage rooms.

According to section 26, cl. 1, of the executive ordinance the ascertainment of stock in the free storage house must be made quarterly; furthermore, in the second half of the month of August of each year an ascertainment of stock must be made and the record over the quantity of alcohol hereby established must be forwarded by way of the financial board of the first instance to the controlling department 2 of the T. R. ministry of finances for statistical purposes.

The ascertainment of stocks must be performed by the leader of the district of control of the financial guard and by a second financial guard official in the presence of the proprietor of the free storage house.

In what manner at the ascertainments of stock the account for the consumption tax must be stated is provided by section 71 of the law and

25 of the executive ordinance, and by Appendix F to the same (p. 131 and Supplement VI of the collection); further by the decree of the ministry of finances of July 5, 1889, and of May 2, 1890.

As for the rest, as regards the notification of the time of ascertainment of stock to the proprietor, the delivery of the declaration of the stocks, manner of ascertainment of the quantity and quality of the stocks, and the proceedings concerning established deficiencies, reference is made to the provisions of section 72 of the law and of section 26 of the executive ordinance. It is the duty of the financial board of the first instance—especially, however, of the leaders of the control districts—to inspect as often as possible the free storage houses, and thereby to obtain for themselves the information whether the conditions under which the concession had been given are still complied with, particularly whether the security is proportionate to the stock on hand, and whether the officials of surveillance perform their duty.

The inspectors of distilleries must be employed according to feasibility at this inspection. The officials of surveillance, as also the officials of the super control, are obliged, in each free storage house locally connected with a refinery, to satisfy themselves whether the register is kept correctly, particularly whether those quantities of alcohol that had been taken from the stock on hand within the last twenty-four hours, are entered upon the same as well as those that had been subjected to a second refining. In no case must the quantity of alcohol entered upon the account register exceed the quantity brought into the refinery.

No change is allowed to be made in the storage rooms or in general in the buildings and no complexity of buildings shall be permitted as free storage houses without the permission of the financial board.

Furthermore, watchful attention must be given that the inspection instruments mentioned on page 145 of the collection are present in the free storage house, as also that by temporary reexamination of the same their perfect applicability must be established.

Chapter I. Section 5 of the Law and Section 1 of the Regulation Gazette.

Production of spirits exempt from duty for family use.

Sec. 5. The exemption from taxation granted by the regulations made hitherto[1] for spirits produced from materials raised on one's own land for family use remains in force within the fixed limits and conditions. The ministry of finances is, however, empowered to cancel the concessions exceptionally made, as far as they can be dispensed with, in order to facilitate the surveillance on the part of the revenue offices of the spirits exempt from duty, as also, under just regard to the customary mode of the manufacture of spirits exempt from duty, to determine whether the period of time given—one year—must be used uninterruptedly, or may be divided into two or more portions of time.

[1] Decree of the exchequer of August 24, 1835, political laws—collection, vol. 63, sec. 6; decree of the exchequer of September 23, 1835, political laws—collection, vol. 63; decree of the ministry of finances of July 23, 1856, Sheet for the Laws of the Empire, No. 142; ordinance of the ministry of finances of December 21, 1879, Supplement II, Sheet for the Laws of the Land, No. 73, ex. 1873, for Dalmatia (Appendix I of the collection).

The alcoholic content of spirits exempt from duty for family use must not exceed 50° of the centigrade alcoholometer.[1]

The manufacture of spirits exempt from duty within the jurisdiction of the spirits taxation law remains restricted to those lands for which the same is granted at the present time, and in those lands, also, in the future only those persons are admitted to it who manufacture spirits from materials raised by themselves[2] for their own use or for the use of their own household, and do not carry on either a trade in spirituous liquors or a retail or barroom business in the same, nor carry on upon the account of other persons the rectification of spirits or the manufacture of rosolio, liquor, and other spirituous liquids compounded with other materials.[3]

The maximum quantity of spirits for which manufacture free from duty within one year may be granted likewise remains unchanged; that is to say, 56 liters; but for Dalmatia, Tyrol, and Vorarlberg, 112 liters. Under the term spirits that product is understood which at the highest shows 50° according to the alcohol meter scale divided into 100 parts.

Accordingly, the quantity of alcohol contained in 40 liters of spirits produced free from duty must not exceed 20 hectoliter degrees.

The other ordinances relative to the manufacture of spirits exempt from duty, in particular those of the exchequer decree of September 23, 1835, then those of the decree of the ministry of finances of July 23, 1856, Imperial Law Sheet, No. 142, ex. 1856, for Tyrol and Vorarlberg, and of the decree of the ministry of finances of December 21, 1879, Supplement II of the Sheet of the Laws of the Land, piece xxii, l. 73, for Dalmatia, remain in force.

Merely the following changes take place:

1. The financial board of the land may, for its entire province of administration, or for single parts, change the date when the report concerning the availing of the concession of the manufacture of spirits exempt from duty must annually be made, to conform to the circumstances under which this manufacture is done.[4]

The change enacted must, however, be published in due time.

The quantity of spirits exempt from duty conceded for one year, as a rule, is to be manufactured in one continuous portion of time, during which the operation of the distillery is continued day by day, Sundays and holidays only excepted. But if someone wishes to use two or several materials not obtainable at the same time for the manufacture of

---

[1] There is no objection made to the fact that a portion of the quantity of spirits accorded to a party for production exempt from duty should also be manufactured with a higher alcoholic content than with 50° of the Centigrade alcoholometer scale, and a punishable transgression of the maximum content of degrees fixed by law for the spirits exempt from duty is incurred only, then, when the whole annual quantity produced exempt from duty by a party, in the average, shows a higher alcoholic content than that of 50° of the scale above mentioned. (Decree of the ministry of finances of May 9, 1889.)

[2] Berries may be considered as self-raised only, then, when they grow on premises owned or rented by the distiller, and not when they have been collected in forests belonging to other owners, to the exchequer, or to communities.

[3] Persons that may manufacture spirits exempt from duty from materials produced by themselves for their own use, or for that of those of their own household, are not permitted to dispose, either for money or without money, of the spirits manufactured exempt from duty for another purpose or to other persons than those just mentioned. Transgressions of this prohibition are to be punished in accordance with section 341 of the revenue penal law under the provisions of sections 81 and 82 of the spirits taxation law. (Decree of the ministry of finances of October 25, 1889.)

[4] Hereby section 43 of the exchequer decree of September 23, 1835, collection of political laws, vol. 63, has been changed, according to which the report had always to be made at the latest up to October 15 of each year.

the quantity of spirits exempt from duty, then for each kind of such materials a particular portion of time may be designated, with an operation of the distillery interrupted only on Sundays and other holy days. There may also, if necessary, be for husks of pressed grapes two or three periods; for farinaceous stuffs, two, and for wine sediments, three periods in the year, be conceded in behalf of the use of those kinds of materials for the manufacture of spirits exempt from duty.

In fixing each period it must be provided that, with regard to the quantity and quality of the kinds of materials from which the spirits are manufactured, and the size and quality of the distilling apparatus, and to the duration of the distillation, a limit not longer than is necessary for manufacturing the quantity of spirits exempt from duty is authorized.

After the expiration of each period the distilling apparatus is to be placed under official fastening as soon as possible.

3. Nobody is permitted to manufacture spirits exempt from duty outside of the buildings and areas which he owns himself, or which he cultivates.

4. The concessions exceptionally made for some mountainous sections of Styria and Corinthia, in regard to the report and control of the manufacture of spirits exempt from duty by the exchequer decree of December 19, 1838, relatively, by the decree of the ministry of finances of December 11, 1849, for the present are sustained, with the provision that the period during which the operation exempt from duty may continue must not exceed two months annually. Yet each manufacturer of spirits exempt from duty forfeits these concessions when he abuses them for the manufacture, exempt from duty, of a greater quantity of spirits than that conceded to be exempt from duty or for any other fraud upon the public treasury.[1]

It is evident that the exclusions hitherto placed upon these exceptional concessions are sustained. (Section 1 of the executive ordinance.)

Chapter I, Section 6 of the Law.

Exemption from the consumption tax.

Sec. 6. Under the conditions and precautions necessary for the protection of the public treasury, those spirits are exempt from the con-

[1] The exchequer decree cited of December 19, 1838, is, by virtue of a sovereign decree of November 24, 1838, that in all the districts of Styria, which are in the same position as the districts of the Bruck and Judenburg counties, already ascertained, viz, being unable to perfectly comply, without difficulty, with the control of the provisions existing in regard to the manufacture of spirits, those real-estate owners who confine themselves to the manufacture of spirits exempt from duty, and do not use an artificial distilling apparatus, may be permitted, only from three years to three years, to give the information that they wish to make use of the exemption from taxation, as ordained by section 43 of the regulation relating to the execution of the provisions, on account of the taxation of spirituous liquors, of September 23, 1835. Those parties remain obliged to give notice during the course of the three years only, when they should be willing to change from the manufacture exempt from duty to that subject to duty, or shall be willing to make use of artificial apparatuses, or when there should occur a change of proprietorship or the place of manufacture. In regard to these favored parties there shall be no official closure of their distilling appliances, but the revenue supervisors shall, occasionally, if some other professional business brings them into the vicinity of such persons, make inspection to convince themselves whether or not the parties have acted in conformity with their original notice, or have committed any defraudation. By the decree of the ministry of finances of December 11, 1849, these alleviations in the control of manufacturers of spirits, exempt from duty, in the mountainous sections of Styria, have been extended also to the real-estate owners of Corinthia, being in the same circumstances.

sumption tax which, either as such or in liquors or rum, for which they have been used, or in wine with which they had been mixed for the increase of its content of alcohol, are exported beyond the customs boundary,[1] or which are used for industrial purposes, inclusive of the manufacture of vinegar, for cooking, heating, cleaning, illuminating, for healing, and scientific purposes; for the alcohol designated exempt from tax. For industrial purposes, however, in accordance with the provisions to be made by way of ordinance, a control fee of 1½ kreutzers per liter of alcohol is to be paid by the person for whom the license for the manufacture of alcohol exempt from tax is made out.[2]

The same is true with regard to those spirits which would be dutiable by a distillery subject to the production tax on the basis of the indications of a control measuring apparatus, but which are warehoused exempt from tax for the sake of exportation.[3]

The manufacture of compound ethers from methylated spirits is unlawful.

The use of spirits methylated by the common methylene for the manufacture of the so-called compound ethers (rumants-sugar ether, vinegar ether, in so far as the same are not destined for technical purposes, etc.), is unlawful.

Violations of this ordinance are to be treated as transgressions of the prohibition to remove entirely or partially the methylene from methylated spirits. (Decree of the ministry of finances of July 27, 1890, Imperial Law Sheet No. 39.)

The financial officials, by frequent inspection of the sales registers kept by the dealers in spirits methylated by the common methylene, have to convince themselves whether or not, perhaps, establishments (enterprises) which produce compound ethers do buy in larger quantities spirits which have been methylated by the common methylene. Should this be stated of an establishment, then special attention on the part of the financial officials must be given to the same, so that eventually transgressions of the preceding regulation may be prevented or discovered, as the case may be. A particular attention on the part of the financial officials must, in general, be given to establishments which either purchase in greater quantities spirits methylated with the common methylene or present in greater quantities spirits for methylation by one of the special methylenes, if such establishments make use of a distillation apparatus. It is the duty of the financial officials in such cases to prevent methylated spirts from being demethylated or being used for the manufacture of products containing alcohol and serving directly or indirectly for beverage. (Decree of ministry of finances of July 27, 1890, Regulation Sheet No. 39.)

This ordinance has lately been brought into notice by the decree of the ministry of finances of September 14, 1890, occasioned by a larger revenue exception raised on account of the demethylation of methylated spirits.

---

[1]The more particular provisions are contained in Appendix A and in section 29, lit. B of the V. V. (ordinances for the execution of the spirits taxation laws) printed along with Appendix A of the V. V., relative to the provisions for the exportation of spirits. (Supplement II of this collection.)

[2]The more particular provisions for this are contained in the regulations for spirits destined for use exempt from tax. (Supplement III of this collection.)

[3]See in this case the provisions of the above-cited Appendix A, lit. D. II. (Supplement II.)

Methylation by shell-lac solution of spirits destined for the finishing of rubber textures.

In supplementing section 3, lit. B., L. 3 *a*, second clause of the regulation for the spirits destined for use, exempted from duty (Appendix III, page 371 of the collection) with the consent of the royal Hungarian ministry of finances, it is permitted that spirits destined for the finishing of rubber textures, like those destined for the manufacturing of brew glazing, be methylated by a solution of one part of weight of shell-lac and two parts of weight of alcohol of 95 per cent, which has to be added to the spirits in the proportion of 20 per cent.

The shell-lac solution used as methylene must answer the requirements resulting from section 4 of Supplement H to the regulations (page 400 of the collection). (Decree of the ministry of finances of November 8, 1890, Imperial Law Sheet No. 197, Regulation Sheet No. 50.)

Complete isolation of the branches of manufacture using methylated spirits from other trades which work spirits free of the consumption tax.

In partial change of the provision of section 3, lit. B, l. 11, of the regulations, relating to spirits destined for use exempt from duty (page 375 of the collection), with the consent of the royal Hungarian ministry of finances, it is ordained:

Tradesmen who, besides that trade for which they use methylated spirits, carry on another trade in which spirits are used, on which the consumption tax does not attach, are in such cases, where in one of those trades, as, for instance, with the production of ether, a distillery apparatus is employed, obliged to keep the different branches of manufacture separated from each other in such manner that not merely the same are carried on in completely isolated localities, but that also those localities stand among themselves in no inner connection, such as the access from a common courtyard. (Decree of the ministry of finances of January 16, 1892, Imperial Law Sheet No. 24, Regulation Sheet No. 11.)

SIXTH CHAPTER.

GENERAL PENAL PROVISIONS.

Validity of the revenue penal law.

SEC. 80. In those kingdoms and lands in which the penal law relating to violations of the revenue laws is in force, the provisions of this penal law, together with the supplementary directions, will find application upon the violations of the terms relating to the disposition of spirits, provided there be no other provision made in the present law.

In Dalmatia, where this penal law is not introduced, the violations of the terms mentioned must be dealt with under the penal proceedings already existing there for violations of the consumption tax.

The provisions relating to the kind and the measure of the punishments, and relating to the liability for the same, as also relating to the limitation of the relative violations, will be passed for Dalmatia in the way of ordinance, respect being had to the relative provisions in force for the rest of the dominions of the Empire in so far as no direction is contained in the following sections:

Measure of the fines.

SEC. 81.[1] The measure of the fines for aggravated violations of the revenue law, by changing section 265 of the revenue penal law, shall be fixed at from eight to twelve times the amount of the production or consumption tax. In case the violator has already been punished for clandestine trade or for an aggravated violation of the revenue law, the fine may be increased to sixteen times the amount of the tax mentioned.

Furthermore, the measure of the fines is changed for section 344 of the revenue penal law to from 2 to 200 florins; for section 348 of the revenue penal law to from 5 to 200 florins; for section 452 of the revenue penal law to from 5 to 500 florins; for section 453 of the revenue penal law to from 2 to 200 florins; for section 455 of the revenue penal law to from 100 to 1,000 florins, and for section 458, paragraph 2 of the revenue penal law, to from 200 to 5,000 florins.

Mitigation of punishment.

SEC. 82.[2] The fines which have to be imposed on account of the violation of the present law must never be mitigated below the minimum provided by law, not even if the execution of the legal penal proceedings is suspended.

Liability of the proprietor for the fines.

SEC. 83. The manager of the distillery, or, during his absence from the distillery, his representative, will be considered as the principal of any dutiable process of spirits manufacturing which is not reported or which deviates from the report and certificate.

In the same manner the manager of a distillery or of a free storage house for spirits will be considered as the principal in the removal, unreported or otherwise irregularly, of spirits from the distillery or the free storage house in so far as he or his representative is not guiltless of such removal, and the object of the violation was at the same time a theft or a defraudation.

The proprietor of the distillery or of the free storage house, provided he does not himself manage the concern, is unconditionally liable for the fine imposed upon the manager or his representative.

Superannuation of the fine not yet imposed by a penal sentence.

SEC. 84. The term of limitation of the fine not yet imposed by a penal sentence, in the case of violations of the prescriptions relating to the production and consumption tax of spirits, is fixed at three years.

---

[1] The provisions of this section will find application also upon the violations of the prescriptions relating to the manufacture, exempt from tax, of self-produced ingredients for one's own domestic want (section 5 of the law). (Decree of the ministry of finances of December 8, 1888.)

[2] Also this section will find application upon the violations of the prescriptions relating to the manufacture, exempt from tax, of self-produced ingredients for domestic use. (Exchequer decree of December 8, 1888.)

SPECIAL PENAL PROVISIONS FOR VIOLATIONS OF THE DIRECTIONS RELATING TO THE PRODUCTION TAX.

SEC. 85. An aggravated violation of the revenue laws will be punished—

1. When the dutiable process of spirits manufacturing (section 41) is performed without the prescribed report having been filed and the tax certificate being present in the distillery, or when pressed yeast is manufactured without reglementary report.

In this case the unreported time of distilling will be assumed to be at least eight days for the measurement of the fine.

2. When the dutiable process may have been reglementarily reported and the tax certificate has been acquired, yet—

(*a*) When mash of farinaceous ingredients is prepared or stored in vessels other than those reported and officially gauged, or

(*b*) When in distilleries to which the use of tubs for preliminary mash of coolers, etc., has been permitted, in those foremash tubs or in those coolers fermented or fermenting mash, or in the vessels destined for the keeping of fermented mash, fermenting or fresh mash, or mashed ingredients are stored (section 43), or

(*c*) When the dutiable process is performed with kinds of ingredients other than those which have been reported and on which duty has been paid, or

(*d*) When the transfer of the production ingredients upon the still is begun before the time reported, or

(*e*) When the dutiable process is continued beyond the point of time reported, or

(*f*) When the distillation of mash or spirits once distilled is performed in any other way than that reported or in a place other than reported,

The fine must be measured, in cases in which it concerns the irregular preparation or storing of mash or of mash and mashed production ingredients, by the directions according to the impost which in accordance with the output of alcohol, is fixed in section 40, and accrues for the quantity of mash or ingredients prepared or stored against the directions in the other cases, according to the impost which has been lessened or exposed to lessening in the measure of the provisions of the estimate by aggregate, whereby, in the case *f*, it is to proceed as if no report and payment of impost at all had been made. But if the distillation of mash made from farinaceous ingredients be accomplished in a still which has component parts other than those designated in section 32 under I, or the capacity of which exceeds 2 hectoliters, or which can be filled without removing its cooler, then the fine must be measured according to the consumption tax at the superior rate accruing for the quantity of alcohol really produced, not, however, below 100 florins.

When the dutiable process of the spirits manufactured from farinaceous ingredients is performed outside of the period of six months designated in section 32, cl. I, lit. *a*, or when the farinaceous ingredients are kept in a mashed state outside of the operating rooms appertaining to the distillery (section 26, cl. 1), then, in addition to the above-mentioned penal provisions, a fine of 20 to 200 florins must be imposed. The same fine shall be imposed when the owner of a distillery designated in section 32, cl. I, operates with farinaceous ingredients other than self-produced ones.

SPECIAL PENAL PROVISIONS FOR VIOLATIONS OF THE DIRECTIONS RELATING TO THE CONSUMPTION TAX.

(a) *Unreported process of the manufacture of sprits and of pressed yeast.*

SEC. 86. If the dutiable process of the manufacture of spirits is undertaken without the fulfillment of the prescribed conditions, then the punishment for the aggravated violation of the revenue law perpetrated by the unreported dutiable process must be imposed. If thereby the manufacture of the spirits has been accomplished under reglementary use of the control-measuring apparatus, the impost has to be computed in accordance with the provision of section 64, and the result also to be considered as the basis for the measuring of the fine.[1]

If, however, the unreported dutiable process has been performed without the use of the control-measuring apparatus, or if a disturbance of the regular acting of the same has been noticed, then for each hectoliter of the total capacity of the fermentation tubs found, and for each day of the unreported dutiable process, a yield of alcohol of 8 hectoliter degrees must be assumed and be considered as a basis for the measuring of the impost and of the fine.

If it should perhaps be evidenced that in spite of the disturbance of the control-measuring apparatus the impost accruing according to the indications of the same would be higher than that resulting at the assumption of a yield of alcohol of 8 hectoliter degrees, then the former must be considered as the basis for the measuring of the fine.

If in a distillery the manufacture of pressed yeast is undertaken without reporting the same for the payment of the tax, then the punishment for an aggravated violation of the revenue law shall be imposed, and the tax on pressed yeast resulting by the computation for the whole month in which it has been perpetrated must be considered as the basis for the measuring of the fine.

(b) *Beginning of the reported dutiable process of the manufacture of spirits before the reported point of time.*

SEC. 87. The beginning of the reported dutiable process of the manufacture of spirits before the reported point of time is solely to be punished as an irregularity in the dutiable process, if during the same the control-measuring apparatus has stood in reglementary use and no disturbance in its action has happened.

In other cases, upon the too early beginning of the reported dutiable process, the same fine must be imposed as upon the unreported process (section 86).

---

[1] In this case merely the quantity of alcohol produced during the actual duration of the unreported dutiable process, according to the indications of the control-measuring apparatus, having been in reglementary action, or the impost to be computed for it, has to be considered as the basis for measuring of the fine.

(c) *Deduction of liquids containing alcohol, or of vapors containing alcohol.—External influencing of the indication of a control-measuring apparatus.—Use of unreported distilling appliances, unreported establishing of new distilling appliances.—Use or keeping of cooling apparatuses not connected with the control-measuring apparatus.*

SEC. 88. A fine of 500 to 1,000 florins is to be imposed[1]—

1. When spirituous liquor which has not flown through the control-measuring apparatus has been deducted by means of external interference, other than casualty; or

2. When vapor containing alcohol is abstracted by such external interference; or

3. When the correct indication of a control-measuring apparatus with relation to the quantity or content of degrees of the product or of the two together is intentionally disturbed; or

4. When no immediate report is made of a disturbance of the control-measuring apparatus having occurred by whatever cause; or

5. When during the reported operation an unreported distilling appliance has been used; or

6. When without previous report a distilling appliance has been established in the distillery; or

7. When in the distillery a cooling apparatus is found, or has been used, which is not connected with the control-measuring apparatus, and which is adapted for the condensation of vapors containing alcohol and for the yielding of the alcohol-containing fluid originating therefrom, with the exception of the cooling apparatus of a rectification apparatus, when the combination of distillery and rectification is permitted according to section 77.

In the case of repetition the above fine must be doubled.

Beside this the fine for aggravated violation of the revenue law must be imposed when spirituous liquor, before it has run through the control-measuring apparatus, has been put aside under defraudation of the tax.[2]

The tax, also as basis for the measuring of the fine, will in this case be computed in such manner that for the three months preceding the point of time of the detection the uninterrupted state of defraudation of the tax will be assumed, provided that no other duration of the same or of greater extent of the defraudation of the tax shall be proved. In case also dutiable manufacturing of pressed yeast has taken place, the same procedure will be had with regard to the tax for pressed yeast and the fine for its defraudation.

(d) *Prohibited continuation of the reported dutiable process of the manufacture of spirits.*

SEC. 89. A fine of 500 to 5,000 florins will also be imposed for the continuation of the reported dutiable process of the manufacture of spirits which has been prohibited during a disturbance of the regular action of the control-measuring apparatus.

Besides this fine, the manufacture of spirits having taken place under

[1]The violations in the sense of the provisions of this sentence to be punished by fines in a fixed measure are not to be considered as aggravated violations of the revenue law.

[2]The fine for aggravated violation of the revenue law can thus be imposed only when spirituous liquor has been carried away from the distillery (unreported) with defraudation of the tax.

evasion of the tax will be punished as an aggravated violation of the revenue law.[1]

The reimposed tax will be ascertained in the following manner:

First of all it will be established that—

(*a*) The tax sum, which, according to the actual indications of the control-measuring apparatus, accrues for the time since the last official inspection connected with the ascertainment of the indications of this apparatus, whether this revision may have been combined with a statement of account or not.

(*b*) The tax sum, which results for the same time, when for each hectoliter of the total capacity of the fermentation tubs reported, or perhaps used unreported, a daily yield of 8 alcohol degrees is assumed.

The tax sum *a* will then be compared with the tax sum *b*, and the amount by which the latter is larger than the former will be assumed to be the reimposed tax.

(*e*) *Prohibited use of mash vessels and appliances.*

SEC. 90. As a contravention it must be punished with 20 to 200 florins fine in each single case.

(*a*) When in fore-mash tubs, in coolers, in cooling vats, and generally in vessels in which, according to their reported destination, mash alone should be contained before the beginning of the fermentation, mash is put away in a fermenting or fermented state, or

(*b*) When mash is put away in fermentation vessels other than those stated in the report, or supplementarily, or generally in vessels which, according to the record of the finding, are not destined for the reception of mash.

If, however, such a violation be committed during that time for which an account of the disturbance of the regular action of the control-measuring apparatus, the ascertainment of the quantity of alcohol according to section 62, L., II, V., should be made, then the sentence for aggravated violation of the revenue law with 50 florins for each hectoliter capacity of the vessels used in violation of the prohibition must be pronounced. Fractions of a hectoliter will be counted as whole hectoliters in this case.

(*f*) *Defective or incorrect keeping of the register.*

SEC. 91. The omission of the entry in due time into the register of the dial indication of the control-measuring apparatus, or of any of the other requirements in section 65, as also every incorrect entry into the same, will be fined with 5 to 500 florins as incorrect bookkeeping.

(*g*) *Prohibited removal of spirits from the distillery or from a free storage room for spirits.*

SEC. 92. The punishment for an aggravated violation of the revenue law must be imposed when spirits are removed from a distillery or from a free storage room for spirits without the prescribed notice (section 67), and in so far as the removal is not made exempt from duty without

[1] The fine on account of an aggravated violation of the revenue law must be imposed in every case of prohibited continuation of the reported process of the manufacture of spirits during the disturbance of the regular action of the control-measuring apparatus, since the law sets up the presumption that the manufacture of spirits has taken place for the sake of evasion of the tax.

previous procurement of the pay-or-credit certificate (section 68), or when, at the official handling of the quantity of alcohol reported for removal, a surplus or a deficit against the report is found which exceeds 5 per cent. The fine for the unreported removal of spirits from the distillery or from a free storage room for spirits is in no case to be imposed of a less amount than 200 florins.[1]

(*h*) *Undue claiming of the lower rate of the consumption tax or of the drawback granted in section 7 to agricultural distilleries.*

SEC. 93. The punishment for an aggravated violation of the revenue law must be inflicted when by means of incorrect statements or pretexts—

(*a*) The lower rate of the consumption tax, or

(*b*) The drawback granted in section 7 to agricultural distilleries is unduly claimed.

The basis for measuring the punishment will be: In case *a*, the difference between the higher and the lower rate of the consumption tax for the quantity of alcohol to which the claim relates.

In case *b*, the amount of the drawback for that quantity of alcohol which could be produced by the greatest extent of operation of the distillery admissible under section 7, l. 2, lit. *b*, within the period designated under lit. *c* of the same section.

(*i*) *Violations of the directions relating to the use of spirits exempt from duty for industrial purposes.*

As an aggravated violation of the revenue law such violations will be punished—

1. When spirits, which have been dispatched without the payment of the consumption tax for application to purposes provided in section 6, are used for other purposes, or

2. When such spirits, without being methylated in a manner that securely excludes their use as beverage, are disposed of to any other person by him who has procured them for a purpose provided in section 6.

As a basis for the measuring of the fine in both cases, the amount must be considered which accrues according to the higher rate of the consumption tax for the quantity of alcohol which was contained in the spirits used for purposes other than industrial or disposed of to any other person.

The fine, however, must be measured in no case with a lower amount than with 200 florins.

(*K*) *Violations of the directions relating to the refining and transforming of any distilled spirituous liquid.*

SEC. 95. 1. A fine of 500 to 5,000 florins must be imposed when in an enterprise in which the rectifying of any distilled spirituous liquid takes place—

(*a*) Any other fluid containing mash is deposited in the rectifying apparatus; or, when

[1] Each prohibited or unreported removal of spirits from the distillery or from a free storage room is prima facie an aggravated violation of the revenue law; therefore, the proprietor will not be permitted to remove without previous notice or without payment of tax eventual surpluses arising in consequence of a shrinkage smaller than that resulting according to calculations. (Exchequer decree of May 2, 1890.)

(*b*) Any other conduit is applied besides the officially secured pipe conduit destined for the feeding or emptying of the rectifying apparatus.

If hereby an evasion of the tax has occurred, then, in addition to above, the sentence for aggravated violation of the revenue law must be enforced.

2. A fine of 5 to 500 florins must be imposed for each violation of the prohibition, covering in some cases, the combined manufacture and transformation of distilled spirituous liquid in one and the same place of manufacture. (Section 77.)

3. An order fine of 2 to 100 florins must be imposed—

(*a*) When spirits are connected with the still unless the prescribed notice has been filed and the official acknowledgment of it is in the hands of the managers.

(*b*) When spirits are connected with the still outside of the reported time of operation.

(*c*) When a distiller, subject to the production tax, brings spirits of an alcoholic content lower than 30° upon the still destined for the rectification. (Section 77, cl. 1.)

Highest measure of punishment for violations of the prescriptions relating to the consumption tax.

SEC. 96. The provisions of sections 39 and 40 of the revenue-penal law relating to the highest measure of the fine shall not apply to the fines to be imposed for violations of the prescriptions relating to the consumption tax of spirits, provided that no punishment by imprisonment is imposed in place of the amount exceeding that measure.

SPECIAL PENAL PROVISIONS FOR THE EXPORTATION OF DISTILLED SPIRITUOUS FLUIDS.

(*a*) *Discrepancies between the exportation declaration and the official finding which must be punished as aggravated violations of the revenue law.*

SEC. 97. The punishment for aggravated violations of the revenue law must be inflicted—

1. When in an exportation declaration, filed with the claim upon exportation drawback, or also upon drawback of tax with liquor, the quantity of alcohol, or if mixed with another distilled spirituous fluid, the quantity of alcohol, as determined by the multiplication of the quantity of the fluid with its content of alcohol based upon degrees of the prescribed centigrade alcoholometer, appears to be stated in the claim for drawback by 5 per centum higher than the official finding; unless the deficiency should be justified by the reglementary report of a change in the quantity or in the alcoholic content of the fluid, perhaps occurring during the transportation.

2. When in cases, where—

(*a*) Liquors or

(*b*) Any other distilled spirituous fluids have been declared for exportation with the claim upon exportation drawback or also upon drawback of tax.

In case—

(*a*) Another fluid than liquor should be found; or in case

(*b*) A fluid which does not belong under the distilled spirituous fluids, as, for example, water or wine, should be found.

The basis for the measurement of the fine must be—

In the cases mentioned under paragraph 1 the amount by which the

exportation drawback, according to the exportation declaration, exceeds the official finding.

In the cases mentioned under paragraph 2 the full amount which has been unduly claimed as exportation drawback or also as drawback of tax.

(*b*) *Discrepancies between the declaration and the official finding which must be animadverted by an order fine.*

SEC. 98. Discrepancies of the kind mentioned in the preceding section (97 cl. 1), which amount to more than 3 per centum but less than 5 per centum will be punished by a fine of 2 to 200 florins.

SUPPLEMENT I TO SECTION 5 OF THE LAW.

PROVISIONS GOVERNING THE MANUFACTURE OF SPIRITS FREE OF TAX.

Concerning the manufacture of beverages free of tax for one's own use.[1]

SEC. 41. The exemption from consumption tax granted by the exchequer decree of August 24, 1835, (section 6, No. 1), of spirits manufactured of self-produced material, for one's own use, in a quantity not below 1 kilderkin,[2] does not extend to those persons who carry on a trade in spirituous liquors, retailing or barroom selling, or are engaged for account of others in one of the occupations specified in section 6, No. 2, of the exchequer decree cited.

SEC. 42. In this exemption from payment of duty, also, no one can participate who, according to the constitution of the country and the prescriptions existing with reference to the manufacture of liquors, is not entitled to manufacture spirits or spirits of wine for his own use.

SEC. 43. Whosoever wishes to make use of the tax exemption mentioned must give notice thereof in writing or orally at the latest up to October 15, of each year[1] to the local magistrate, or if in the same place or nearer than the local magistrate an official should be found charged with the business of collecting the consumption tax, to said official. In this notice he must state—

1. His dwelling place and the building in which he intends to produce spirits.
2. The kind of fruits or other materials from which he intends to manufacture spirits.
3. During what portion of the space of time from November 1 of the year in which the notice is given till October 3 of the following year, and during how many weeks or months in that period he intends to carry on the manufacture of spirits.
4. The estimated quantity of liquor he intends to produce in that period.
5. The real estate from which he has gained or hopes to gain the materials to be used in the manufacture of spirits.
6. The quality and capacity of the distillery apparatus of which he makes use in the manufacture of spirits.
7. In so far as he uses fermentation vessels exclusively for the preparation of spirits, the quality and capacity of those vessels.

---

[1] Essentially identical provisions relative to the manufacture of spirits free from duty have been made, (*a*) for Tyrol and Vorarlberg, by the decree of the ministry of finances of July 23, 1856; (*b*) for Dalmatia, by the ordinance of the ministry of finances of December 21, 1879.

[2] A kilderkin is equivalent to 22 gallons.

8. The number of his household—that is the number of his family, members and domestics, who have board and lodgings—inclusive of himself.

SEC. 44. If other notice is given to the local magistrate than the written notice, or if such has been given by word of mouth, its written record is to be forwarded within three days to the next official charged with the business of the consumption tax, and thereby information is to be given relating to the following circumstances:

(*a*) The place of abode of the party.

(*b*) Whether or not any of the limitations mentioned in sections 41 and 42 be in his way.

(*c*) Whether he himself did produce, or used to produce, the materials from which he asserts his intention to manufacture the spirits.

(*d*) Whether the statement of the quantity of spirits which he intends to manufacture is in proportion to the wants of himself and his household.

SEC. 45. If the notice is immediately given to the revenue official, the latter must obtain from the local magistrate in the briefest way the information relating to those circumstances (sec. 44).

SEC. 46. If the information given by the magistrate presents no objection to granting the tax exemption, then the revenue official must describe the place of operation designated and the vessels destined for the manufacture of spirits, the distilling apparatus which shall be put to service, and if the party be provided with apparatus which is exclusively dedicated to the manufacture of spirits, must designate those vessels, and if the distilling apparatus is not properly reported in the application, shall have it put out of use.

SEC. 47. To those who have given proper notice and against the license for tax exemption under the reglementary conditions no objection exists, notification and revision sheets are delivered.

SEC. 48. In those sheets it is expressed during what period and from what materials the manufacture of spirits may be carried on free of duty. The period during which the operation free of duty may last is to be fixed with regard to the quantity and quality of the materials from which the manufacture shall take place and as to the construction of the distillery apparatus to be used. As a rule, said period must not exceed two months as a whole for one year; but it does not follow that the period allowed for operation free of duty must be prescribed in an uninterrupted duration. Rather may the same, according to prevailing circumstances, be in two or more subdivisions.

SEC. 49. He that has received the license for operation free of duty has at least twenty-four hours before the beginning of each week in which he desires to distill spirits to give a written or oral notice of the intended operation to the local magistrates, or if the revenue official should be found at the same place or nearer than the local magistrate, to said official. This notice must be given at least for the duration of one week in the aggregate; but the notice given is not bound to apply to all the days of the week for the manufacture of spirits. It depends on him to designate one or several days of the week which he will use for the manufacture of spirits. On other days, however, than those stated, the operation of the distillery is prohibited.

SEC. 50. In the notice is to be stated:

1. Day and hour—

(*a*) With farinaceous materials, at what time the same will be mashed, and at what time the same will be put into the distilling apparatus.

(*b*) With nonfarinaceous materials, at what time the distilling apparatus will be put into operation.

2. The kind and quantity of the materials to be used.

3. The point of time when low wine will be drawn and when spirits will be manufactured.

4. The quantity of spirituous liquor which will be produced.

5. If there are fermentation vessels which were designated, then the number and capacity of the vessels which were used must be stated.

SEC. 51. It is prohibited to use another quantity or another kind of materials, to begin or to end the operation at another time, or to produce a greater quantity or different kind of spirituous liquor than was authorized.

SEC. 52. The distiller may be released from giving the single notices, if the following conditions exist:

1. If he confines the distilling process to such a period that with regard to the quality of the distilling apparatus and to the reglementary distilling time the production of a greater quantity of spirits than that reported by the producer for that period is not to be feared.

2. If this production has to be done in a season in which estate owners customarily are wont to use materials of the kind reported in the manufacture of spirits for their own use.

3. If the distilling apparatus before the beginning and after the expiration of the period for which the producer is excused from single notices is delivered into official custody, or put out of use officially in any other manner.

SEC. 53. The provisions of sections 12–18 and 21, relating to the duration of the mashing and to the distilling time hold good; also for those producers who carry on the distillation of spirits free of duty for their own use.[1]

SEC. 54. Even those who are excused from filing single notices are subject to the ordinance relative to the time of distillation contained in section 18. They are not allowed to make use of any other distilling apparatus than that reported in the original notice and designated by the revenue official.

---

[1]The sections adduced read as follows:

SEC. 12. The duration of the mashing, that is, the space of time after the lapse of which the mash is to be taken out of the fermentation vessels and to be carried over into the distilling apparatus, must not amount to less than twenty-four nor to more than sixty hours, counted from the point of time of pouring in the materials destined for the manufacture of spirits into the mash tubs or into the vessels destined for their preservation.

Should a longer space of time be required than the regular allowance it must be especially applied for. This additional allowance can only be granted if peculiar circumstances arise.

SEC. 13. The starting of the fire under the distilling apparatus which is not found already in operation duly reported has always to be done at the very time reported for the transfer of the mash into the distilling apparatus. It must not take place either sooner or later.

SEC. 14. At the examination made of the locality of manufacturing and of the fixtures for work in accordance with the exchequer decree of August 24, 1835, it is also to be ascertained what space of time, according to the quality of the fixtures, is required for one single filling of the same:

1. In order to draw (*a*) low wine from the mash and then (*b*) high wine from low wine in those distilleries in which spirits or alcohol is not immediately gained from the mash.

2. In order to draw spirits immediately from the mash in other distilleries.

Should it be impossible in single cases to ascertain with exactness that space of time, then at least the longest and the shortest duration is to be determined which is required for one single filling of the distilling apparatus.

SEC. 15. This determination is to be made after a hearing of the owner of the distillery and to be distinctly recorded for each single distilling apparatus in the minutes to be kept for the description of the fixtures for operation. If the owner

SUPPLEMENT II TO SECTION 8 OF THE LAW.[1]

Provisions relating to the exportation of spirits and liqueurs under export indemnity, etc.

I*a*. For the export of spirits on which the consumption tax is payable over the customs line with the claim of tax indemnification, besides manufacturers, not needing a special license, distilleries not subject to the consumption tax, or free warehouses, other persons may be authorized in accordance with the following provisions:

1. Whoever wishes to obtain that allowance must apply in writing to the financial board of the first instance, in the official district in which the distillery or the free warehouse is situate, from which the spirits subject to the consumption tax are to be remanded for exportation beyond the customs line.

The privilege is granted for the duration of a period of manufacturing—that is to say, for the time from September 1 of the one year to the last day of August of the following year—to each merchant domiciled and recorded in the board of trade who submits to the obligation to permit an inspection of his books by the financial officials, and who has not been convicted either of smuggling or of grave revenue violations in regard to the regulations of commerce subject to customs, or relating to a dutiable proceeding.

2. The privilege is granted only upon condition that security is given to the exchequer for the tax which accrues for the quantity of alcohol to be removed for exportation beyond the customs line under the bond of the consumption tax from a distillery or from a free warehouse.

This security may be given in the manner prescribed in section 32 of this executive ordinance (page 166 of the collection), and either for all the quantities of alcohol prospectively to be exported within the relative period of manufacturing, or for each exportation.

In giving the security in the former case the distilleries or free warehouses must be designated from which the spirits are intended to be removed for exportation, and likewise it is to be reported up to what amount the security given shall serve for a distillery or a free warehouse.

---

of the distillery is not satisfied with the determination made, then the opinion of two unbiased experts under oath is to be solicited, or if the official holding the examination finds it more appropriate, a sample distillation is to be instituted in the presence of said official, or of a deputy designated by him. The costs of the test by experts is to be borne by the exchequer, if they find the duration of distillation stated by the distiller correct.

SEC. 16. The duration of distillation determined according to those ordinances (secs. 14 and 15) must serve as a standard for the distiller and he is not allowed to deviate therefrom. Should he believe himself entitled to claim a deviation by reason of peculiar circumstances, then this must be expressly declared in the notice and the reasons for such deviation must be stated. The transgression of the reglementary duration of distillation is treated in accordance with sections 40 and 41 of the consumption tax law.

SEC. 17. No mashing-in must be done in the months of October to March, inclusive, before 6 o'clock in the morning or after 10 o'clock in the evening, and in the months of April to September, inclusive, before 4 o'clock in the morning and after 7 o'clock in the evening.

SEC. 18. The distilling apparatus must not be in operation, either for distillation of mash or for distillation of low wine, before 5 o'clock in the morning and after 7 o'clock in the evening.

SEC. 21. The materials mashed-in during the course of one day, according to the notice given, must be distilled also in one day by the distilling apparatus. A distribution of the mash of one day for distillation on two or more days is not allowed.

[1] Exchequer decree of August 10, 1888.

The financial board of the first instance gives information hereof and of the privilege granted, to the financial officer to whom the official treatment of the exportation is intrusted.

The security becomes released and may then be used anew as soon as the confirmation by the exit customs office of the exportation beyond the customs line has reached the sending office.

The duty of payment and responsibility regulated by sections 15 and 16 of the law in regard to the tax is not relinquished when, instead of the proprietor of a distillery subject to the consumption tax or of a free warehouse, another person performs the export beyond the customs line of spirits on which the consumption tax is payable. Yet said person is in the first instance eventually amenable by laying claim to the security given for the payment of the consumption tax for the quantities of alcohol that have been removed from a distillery or a free warehouse for exportation beyond the customs line but that have not really been exported.

(*b*) Regarding the exportation of spirits for which the production tax has been paid beyond the customs line with the claim upon drawback of tax and indemnification, relative to the admission to the same, the preceding provisions, sub. 1, are in force. Persons who wish to obtain that admission, among whom spirit manufacturers are to be counted, must also report the localities where they keep their stock of spirits, and assume the liability to concede to the financial officials the inspection of their books of commerce and trade, and also the entrance into their storage magazines for the purpose of ascertaining the stock of distilled spirituous liquors and to make comparison with the books.

II. The provisions prescribed in Appendix A are in force for the exportation of spirits beyond the customs line, with the claim upon tax indemnification alone or upon tax indemnification and drawback of duty together, and for the exportation of liquor beyond the customs line, with the claim upon tax indemnification.

The provisions of Appendix A read as follows:

A. Provisions Regarding the Exportation of Spirits on Which the Consumption Tax is Payable.

1. The exportation of dutiable spirits beyond the customs line can not be made except through a main customs office or a subordinate customs office of the first class, which is empowered to give an export certificate for distilled spirituous liquors.

For commerce on railroads under lock and seal the main customs offices established in the interior of the customs district, which are authorized to fill the place of the customs offices especially empowered to handle exports must use the same precautions in the exportation of dutiable distilled spirituous liquors.

2. Under each intended shipment for exportation[1] of distilled spirituous liquors a declaration according to the appended formula is to be filed with the sending office in triplicate, and when the sender wishes to obtain a certificate designating the export shipment in detail, the issue must be in quadruplicate.

When a person other than the proprietor of the distillery or of the free warehouse, who possesses the special privilege for the exportation of spirits standing under the bond of the consumption tax, undertakes the export sending, then such person or his agent must join in

[1] Under "shipment" is to be understood the quantity going out under one notice from a distillery or a free warehouse.

the execution of the exportation declaration, and thereby he assumes the full responsibility for errors of the export declaration, in so far as the same are ascertained, but after the removal of the export shipment from the distillery or the free warehouse has occurred, and also for all violations of the regulations occurring after that time during the transportation of the export shipment.

The agent must prove himself by his written power of attorney, or else the declaration in question shall not be accepted by the shipping office.

3. With the declaration the shipper assumes the obligation to export the spirits more particularly designated therein in unchanged quantity and quality and in the prescribed time and manner over the customs line, to be responsible for the consumption tax according to the higher tax rate due for the quantity of alcohol contained in the export shipment. For the fulfillment of that obligation the shipper, in so far as he does not possess a free warehouse for spirits under security and does not make the export shipment from said free warehouse, must give security proportionate to the accruing amount of tax in the manner prescribed for crediting, which security, however, does not need to be renewed again and again, but becomes released as soon as the report has reached the shipping office that a former export shipment of spirits has actually crossed the customs line.

This security may also be given in advance for the whole period of operation.

Nevertheless, the following must be observed with the exportation:

(*a*) No shipment of spirits on which the consumption tax is payable is allowed to amount to less than 1 hectoliter, because such spirits must not be removed from a distillery or a free warehouse in a smaller quantity, save the case of the depletion of the stock of spirits. Of spirits on which the consumption tax is not payable the shipment must amount to at least 50 liters.

(*b*) The spirits must be contained in casks or other packages officially gauged, well secured, and adapted for the application of the official fastening, unless the locking and sealing of the space of lading renders the fastening of the packages unnecessary.

(*c*) The casks or other packages must be numbered and be enumerated in the declaration by the arithmetical sequence of their numbers.[1]

4. For a rule two financial officials[2] must officiate at the shipping office if it is a shipment of spirits under bond for the consumption tax.

The sender is obliged to deposit, according to the existing rate, the carriage and traveling expenses of the financial officials who have to perform the official treatment of the export sending, provided those officials have not their official residence at the place of manufacture.

5. The official examination of the spirits destined for exportation must be performed in the distillery or in the free warehouse for spirits, from which the export shipment is to be removed.

---

[1] Upon request made, the financial ministry grants the privilege of the drawing and official authentication of samples of the shipments of spirits to be dispatched under strict observation of certain modalities.

[2] At the shipping office the manager of the control district or, in case he is prevented, the manager of the division, with the assistance of a superior inspector of the financial guard, must perform the official treatment of the exportation in the distillery. If a tax office or customs office is charged with the survey over a free warehouse, then as a rule one of the superior officials of those offices, with the assistance of a second official, eventually of a financial watchman, performs the official function. If the customs office acts at the same time as exit office, then of course, in regard to the number of officials, the regulations laid down for the exit offices have to be complied with.

The shipping office, if according to clause 3 security for the consumption tax for the spirits destined for exportation is necessary, must above all convince itself that the same has been given.

The respective items have to be put into the declaration.

The financial officials, acting as a shipping office, perform the external and internal examination of the shipment, compare the same with the statements of the exportation declaration, ascertain the quantity and the alcoholic tenor of the spirits of every single cask or package in accordance with the manner ordained by section 24 I of this ordinance of the executive, convince themselves of the reglementary quality, etc., of the same, and place the finding upon the copies of this declaration that have been brought in.[1]

---

[1] It is the duty of the financial official acting as transmitting office—

(*a*) To ascertain the number, marks, and figures, as also the quality of the spirits in the casks or of the other gauged packages in which the distilled spirituous liquors are found.

(*b*) To examine the quantity, quality, and the alcoholic tenor of the liquor in each single cask or package. The examination of the quantity in casks has to be made in the manner ordained in section 24 I, ch. 5, and that in other gauged packages in the manner ordained in section 24 I, l. 3 of this executive ordinance.

In partial change of this provision it has been ordered by the exchequer decree of October 30, 1889, No. 33, that in those cases, in which spirits are declared for exportation beyond the customs line with the claim upon indemnification in gauged railroad reservoir cars, the financial officials acting as shipping office have to ascertain the quantity and the alcoholic tenor of the spirits in the manner prescribed in section 24 I, l. 5 of the executive ordinance, and to make visible in the different copies of the exportation declaration the tare ascertained of the railroad reservoir car. The same has to be done also in those cases, in which spirits under bond for the consumption tax are transfused in transit from the transportation casks into railroad reservoir cars, especially destined thereto and adapted for the affixing of the official fastening. The tare of the railroad reservoir car, ascertained by the revenue office is always to be compared with the tare ascertained by the railroad office, and the railroad reservoir cars are admitted to official treatment only when no difference in this regard is found or until such a difference appears sufficiently explained. (Exchequer decree of October 30, 1889, No. 33.)

(*c*) To examine whether the declaration harmonizes with the condition of the distilled liquors; further—

(*d*) Whether the computation of the export indemnifications made therein is correct, which for spirits amounts to 5 kreutzers for each hectoliter degree (liter) of alcohol.

If there is no harmony between the three or four copies of the exportation declarations filed, either among themselves or with the state of the shipment, or if besides those cases in which the fastening of the space of lading is admissible and also to be applied, the spirits are not presented in packages well secured and adapted to the application of the completely securing official fastening, or if the packages with the exception of the casks are not officially gauged, or if in general any one of the conditions prescribed is missing, then the attention of the party has to be called to the existing defects, and the completion of the official action is to be suspended till they are removed.

If in the exportation declaration the quantity of alcohol has been stated too great by more than 5 per cent, or if a liquid has been found which is not spirits (section 97 of the spirits tax law), then penal proceedings are to be instituted.

The latter also inures when differences result between the declaration and the official finding which are to be punished with an order fine in accordance with section 98 of the law. (Section A, l. 10, lit. *c* of the Appendix A, of the executive ordinances.)

If all the prescribed conditions are fulfilled and no objection of any kind is raised, then the consigning office enters its finding upon the proper column of the exportation declaration, applies the official fastening, designates in the exportation declaration exactly the quality of the same, as also the number of the seals applied, notices the item (number of the relative application), the register under which the consignment has been placed, and prescribes the period within which the consignment has to reach the exit office.

One copy of the exportation declaration has to accompany the consignment to the exit office, and is to be handed over to the party for that purpose; the second and third copies, and in case a fourth one has been filed this also, are to be sent directly *to the exit office.* (*Section A, l. 10,* lit. *d* of the Appendix A, of the exec. ordin.)

6. The transfusion of spirits dutiable under the consumption tax, which are destined for storage in a free warehouse or for export over the customs line, from transportation casks into railroad reservoir cars[1] designed particularly for this purpose and adapted to the application of the official fastening during the transportation, may take place only upon the following conditions:

(*a*) The transfusion must extend to the entire consignment removed by virtue of a notice or exportation declaration.

(*b*) The transfusion, at the removal of the spirits from the place of manufacture or from a free warehouse, must be reported under statement of the time and place of its performance to the financial official charged with the superintendence of the enterprise, and is to be entered by that official upon the notice or exportation declaration and reported to the division of the financial guard in the district in which the free warehouse drawing the spirits is situate or to the customs office which has officially to supervise the export assignment, as also to the division of the financial guard in the district in which the transfusion is to take place.

(*c*) The transfusion itself is to be performed under official superintendency, in the presence of two officials of the financial guard. The reservoir, after the transfusion of the spirits has been finished, is to be placed under official fastening and the execution or the transfusion to be recorded in the pass bills, stating the number and kind of the fastenings applied.

7. During the transit of the consignment from a distillery or a free warehouse to the office of exit, the regulations relating to the transportation of consigned import goods on which customs duties have not been paid are to be observed.

Spirits dutiable under the consumption tax which have been officially supervised for exportation beyond the customs line are not allowed to be left within the customs jurisdiction.

If the consignment has reached the exit office within the time designated by the consigning office, if the regulations mentioned in the first paragraph of this point have been observed during the transportation, if the official fastening is found in an inviolate condition, and if upon revision the complete conformity of the consignment with the declaration is found, then the exit office dispatches the consignment for the exit beyond the customs line, and, the exit being performed, enters the confirmation of the exit upon the three or four copies of the exportation declaration, and files one copy as a voucher.[2]

---

[1] Relating to the making conspicuous the tare of the railroad reservoir cars ascertained in the copies of the exportation declaration, compare the preceding exchequer decree of October 30, 1889.

[2] At the exit office the official examination has to be performed by three officials, one of whom must belong to the superior officials and one to the financial guard. Should the exit office have no financial-guard official, then that financial guardsman has to be detailed to the examination who has the highest rank in the financial guard of that post.

The official treatment by the exit office in the same manner as that by the shipping office has to be extended over all the points designated on page 319 and page 320 of the collection, sub. *a*, *b*, *c*, and *d*. In those cases in which the consigning office has exercised the ascertainment of the quantity of the spirits by means of statement of the weight, the gross weighing may suffice, provided no difference results with regard to the alcoholic strength. The latter holds good also for the railroad reservoir cars. (Exchequer decree of October 30, 1889.)

If the prescribed conditions are extant, then the exit office executes the declaration and enters therein the confirmation of the exit. The latter is to be subscribed by the three revenue officials who have performed the revision of the consignment.

If the place of consignment is not the seat of the exit office, and if the quantity

The consignor or his agent is entitled to be present at the ascertainment of the alcoholic strength of the spirits. If the exportation declaration has been filed in four copies, then the fourth copy is forwarded to the consignor as confirmation of the exit.

At the same time the exit office issues, according to the sample annexed, the assignment for exportation indemnification, if such has been claimed in the exportation declaration.

If the exportation indemnification for the spirits which are exported into a neighboring State is dependent upon the confirmation of the entry treatment of the spirits, done therein in accordance with a commercial treaty made with it, then that assignment will not be executed before also this confirmation is submitted.

8. In order to ascertain the amount of the indemnification to be assigned—

(*a*) With every cask or package, the number of hectoliters is multiplied by the number of alcoholometer degrees ascertained for a temperature of + 12° Réaumur, according to the centigrade alcoholometer scale, whereby fractions of a degree are left out of the account.

(*b*) From the product thus obtained, the total is formed for all the singular casks or packages of which the exportation consignment exists, and

---

of alcohol, by the latter, has been found less, and that with iron reservoirs by not more than 1 per cent, and with casks and other packages by not more than 1½ per cent, then this is to be passed (transportation shrinkage). If the quantity of alcohol has been found less by more than 1 or 1½ per cent but not by 5 per cent, then the consumption tax at the tax rate of 45 kreutzers per hectoliter degree of alcohol is to be raised for the deficiency exceeding the above-mentioned 1 or 1½ per cent.

If the deficiency exceeds 5 per cent, then penal prosecution has to be instituted.

Therefore, the exit office has to state in the execution of each copy of the exit declaration the established deficiency in the quantity of alcohol, as also the consumption tax due thereon. The transportation shrinkage has always to be computed solely according to the quantity of alcohol of the whole consignment. (Exch. decree of May 13, 1890.)

With regard to the amount of transportation shrinkage in those cases when the spirits are not only transported to the place of consignment in casks or in reservoirs, but a transfusion of the same, either from the casks into the reservoir cars, or vice versa, takes place, compare the exchequer decree of January 27, 1889. See also the exchequer decree of February 16, 1890, relating to the devices for statement of the amount of transportation shrinkage.

With regard to the supervision of the exit beyond the customs line, the mode of procedure is that prescribed for the exit of transit consignments. The copy of the exportation declaration delivered by the party is to be provided with the exit confirmation and with the computation of the tax indemnification, and to be inclosed with the letter of advice to the exchequer designated for the payment of the amount of the indemnification.

Of the two copies (duplicate and triplicate) sent in by the consigning office and likewise properly to be confirmed, the duplicate has to serve as voucher of the notice register, while the triplicate has to be immediately remitted to the consigning office, which has to inclose the same as voucher to the corresponding item of the application register. If the exportation declaration has been filed in four copies, then the fourth copy provided with the exit confirmation is forwarded to the party.

In the references of commerce relative to the export of goods, the export consignments of spirits performed under exportation indemnification have to be stated separately from the quantities exported without any indemnification, and with the addition whether besides the indemnification also a drawback of tax has been rendered or not.

If the triplicate of the exportation declaration confirmed by the exit office does not reach the consigning office which has ordered the consignment for exportation within fourteen days, reckoned from after the lapse of the terms prescribed by the consigning office, or, if the exit of a quantity of alcohol smaller than that officially treated for exit by the consigning office has been confirmed by the exit office and the deficiency is not allowed to be taken into account as shrinkage, then the consigning office has immediately to make report thereof to the financial board of the first instance having jurisdiction in order to collect the consumption tax.

(*c*) This total (hectoliter degrees) is multiplied by the rate of indemnification legally fixed for every hectoliter degree of alcohol; that is to say, with 5 kreutzers.

(*d*) Of the total amount of indemnification resulting therefrom, however, in virtue of section 9 of the spirits taxation law, merely one-half is provisionally assigned for immediate payment, but the balance, as also the exact address of the recipient, is noted down by the treasury designated for the payment, and the eventual payment of the same is realized only upon special order of the superior authority.

The assignment is executed according to the statements contained in the exportation declaration in regard to the person to whom and in regard to the exchequer by which the payment has to be made.[1]

The following paying treasuries may be designated: In the kingdoms and countries represented in the Imperial Diet, only an imperial royal chief treasury of the country, an I. R. paying office of the country, an I. R. tax office, or an I. R. chief custom office, and as paying treasury in the countries of the Hungarian Crown only the royal exchequer at Budapest, or a royal tax office, or a royal chief custom office.

Immediately after the execution of the assignment the exit office directly advises the exchequer on which the assignment reads repeating the essential dates of the assignment and inclosing a second copy of the exportation declaration.

9. The payment of the amount of the exportation indemnification assigned is immediately made after the advice has reached the exchequer, designated in section 8, to the last indorsee of the assignment against the receipt provided for on the back of the same.[2]

---

[1] The assignments of one-half of the exportation indemnification are allowed to be executed by the exit offices without special authority only for those export consignments concerning which no exception has occurred on account either of a penal incorrectness of the exportation declaration, or of such a one as would cause the mere loss of the indemnification.

The amount of the exportation indemnification to be assigned is to be computed by the exit office solely at the half of the rates fixed in section 8 of the spirits taxation law. Hereby, in regard to the quantity of alcohol, the statements of the exportation declaration are conclusive, provided the official finding does not require their diminution.

The assignment, as indicated by the following form, must contain—

(*a*) The exchequer which is to make the payment.
(*b*) The person to whom or to whose order the payment is to be made.
(*c*) The amount to be paid.
(*d*) The quantity of alcohol in hectoliter degrees.
(*e*) The number and quality of the packages of the consignment.
(*f*) The name of the consignor and of the place of the consignment.
(*g*) The date of the exportation declaration.

The assignment must be subscribed by the first three superior officials, or, if the exit office has but two superior officials, by those, and by the financial-guard official mentioned in the preceding footnote.

It depends upon the consignor whether the assignment shall be delivered to the conductor of the convoy or to the consignor himself.

The letter of advice to the exchequer designated for payment must also contain the same dates and the same signatures.

The blanks for the assignments are numbered among the strictly accounted for printed matter, deposited with the I. R. government's printing office and issued to the exit offices by way of the economical boards of the countries.

[2] The exchequer designated for the payment, immediately after receiving the letter of advice and the copy of the exportation declaration inclosed therein, and after examining the conformity of the two documents has to confirm such receipt and such conformity to the assigning office and to repeat in the confirmation the dates of the assignment designated above under footnote 1. The confirmation serves the assigning office as a voucher for the notice register.

The financial boards of the countries are authorized to have printed blanks of letters of advice and the replications thereto for the exit offices and for the treasuries destined for the payment of assignments.

At the payment of the assignment it must be seen that the contents and the signa-

There is no liability for the genuineness of the signatures of the indorsees. The exchequers are empowered to make payment of the assignments for exportation indemnification for exported spirits drawn on them, even up to the lapse of one year from the date of the drawing of the assignments, provided no other objection occurs.

B. *Special provisions at the exportation of liquor and rum manufactured from spirits taxable for the consumption tax.*

1. The more detailed provisions relating to the proceedings in the giving notice of spirits under bond for the consumption tax to be used for the preparation of liquors and rum destined for export are contained in section 29 B of the execution ordinance. They read as follows:

For the preparation of liquor and rum for exportation to be manufactured from spirits standing under the bond of the consumption tax, the following provisions are in force, to wit:

(*a*) Whosoever wishes to procure spirits on which the consumption tax is payable, for the preparation of liquors or rum destined for export, requires a special permit.

(*b*) The permit is granted only to such manufacturers of liquors or rum who have not been punished either for smuggling or for an aggravated violation of the revenue laws relating to the spirits tax, or for fraud, or over whose property bankruptcy has been declared and who at the bankruptcy proceedings held have not been declared not guilty of the punishable act of which they eventually may have been incriminated.

In the case of an abuse established by proof, the permit is immediately to be recalled independently of the consequences arising from the revenue penal code. It may also be recalled if the one or the other of the obligations specified by this ordinance or later to be specified by way of ordinance has not been fulfilled by the party.

The permit is granted by the financial board of the first instance.

(*c*) In the application for a permit for the procurement of spirits free of duty for the purpose above named there is to be stated:

α. The quantity of spirits destined for the manufacture of liquor and rum for export according to hectoliter degrees of alcohol.

β. The quantity of liquor or rum to be manufactured from these spirits.

---

tures correspond with those of the letter of advice, and that the conveyance of the assignment by the holder named therein down to him who presents the same to the treasury and gives the receipt, has occurred regularly and without any hiatus.

Although the governmental administration is not liable for the genuineness of the indorsees, yet it is the duty of the treasuries to make themselves familiar with the signatures of the firms occurring with them in order by their attention to discover eventual forgeries and to protect the parties from damages.

The item of expenditure for an assignment redeemed is to be vouched not merely by the assignment provided with the receipt of the last holder but also by the original of the transportation declaration and by the letter of advice of the assigning exit office.

Each treasury at which tax indemnifications are paid has to keep, of the quantity of alcohol exported, an exact entry according to the sample *c* from which the name, occupation, character, and residence of the exporter, the quantity of alcohol exported, and the tax indemnification corresponding therewith, as also the amount of indemnification already assigned for payment, must be evident.

This entry has to be concluded annually after the close of the period of operation and immediately to be delivered to the resort control Department III for custom and consumption revenue of the ministry of finances.

If, during the relative period of operation, an export of spirits with the claim upon exportation indemnification should not have occurred, then the chief custom offices as well as the subcustoms offices authorized by exception for the official exit treatment of spirits have to make the negative report to the board of censorship.

γ. The manufactory from which the spirits are to be procured free of duty.

δ. The kind of security for the consumption tax.

(*d*) Before the permit is granted the petitioner must give to the exchequer security for the tax which might be hazarded either by the abuse of the permit or in any other manner.

This security is to be computed in the amount of the inuring consumption tax of 45 florins per hectoliter of alcohol, and may be given in the same manner as appears prescribed in section 32 of the execution ordinance relating to the crediting of the consumption tax.

(*e*) With regard to the removal of the spirits destined for the manufacture of liquor or rum for export from a distillery or from a free warehouse, in general the provisions are in force which have been laid down in section 24 of the execution ordinance relating to the removal of spirits on which the consumption tax is payable into a free warehouse.

In the respective applications must be stated, besides this, also the manufactory for which the spirits are destined, as also the date and business number of the respective permit for the procurement of spirits standing under the bond of the consumption tax.

(*f*) The financial official to whom the spirits destined for the manufacture of liquor or rum for export have been referred, on the arrival of the consignment ascertains the number, mark, and figure of the packages, examines the official fastenings affixed, states the quantity and the alcoholic tenor in the manner prescribed for private free warehouses, and enters the finding and the item of receipt under which the entry has been made into the receipt register, to be kept in conformity with Appendix 37 of this collection, into the two copies of the application and into the notice.

(*g*) The spirits in this manner procured, under the bond of the consumption tax, is left to the proprietor under the obligation that he exports in liquor or rum, inclusive of the shrinkage allowed with liquor (lit. *h*), a quantity of alcohol just as great as has been left to him free of duty, at least within the term of twelve months, counted from the day of the arrival of the spirit free of duty, or that he eventually pay subsequently the consumption tax thereon.[1]

(*h*) Of the quantities of alcohol used for the manufacture of liquor free of duty, as also of the quantities of liquor and rum exported beyond the custom line within the term fixed, the proprietor has to keep a special account according to the sample annexed, in which there have to be entered as debit the quantities of alcohol procured free of duty, and as credit the quantities of liquor and rum dispatched by virtue of the relative exportation declarations, as also the shrinkage in such cases to be put into account for liquor, with 2½ per cent of the quantity of alcohol used. The difference between debit and credit shows the eventual supply of liquor destined for export.

The printed form for this account, likewise in pamphlets paged and paragraphed, the thread of which lies under an official seal, is to be obtained from the financial official, to be designated by the financial

[1] It is not required that the quantity of alcohol to be exported in the liquor or rum during twelve months be identical with the spirits procured free of tax, or that just the liquor manufactured from spirits procured free of tax, must be exported into foreign countries. There is rather incumbent upon the proprietor merely the obligation within twelve months to export in liquor or rum a quantity of alcohol even as great as that which had been allotted to him free of tax. Thus the liquor to be exported may be taken from supplies already on hand or from the liquor destined for the domestic consumption. (Exch. decr. of August 27, 1888.)

board of the first instance, on payment of the costs for furnishing, and is to be remitted to the above-named board at the close of the period of operation.

2. With regard to the exportation of liquors or rum which are manufactured from spirits liable under bond for the consumption tax in general, the provisions above quoted, sub lit. A of Supplement II, are in force, with the following modifications:

(*a*) For liquor and rum prepared from spirits free of duty, the security mentioned in paragraph A, l. 3, is not to be given, since already, in accordance with lit. *d* of the preceding clause 1, the security has to be given in consequence of the permit for procurement of spirits free of duty.

(*b*) For the exportation a special permit is necessary, which is granted merely to manufacturers of liquor and rum.

(*c*) If the export of liquor is made in casks, then those must have a capacity of at least 25 liters. But if the export of liquor occurs in bottles, then only bottles of the same form and size of one-fourth, one-half, one, or several whole liters each are allowed to be contained in the same package.

(*d*) The liquor manufacturer has to deposit with the consigning office samples of the bottles he intends to use for the liquor export.

(*e*) The bottles filled with liquor and belonging to a consignment of at least 25 liters must be packed in boxes or baskets which are adapted to the application of the official fastening and completely secured.

Excepted herefrom are those cases in which the fastening of the room of lading during the transportation on railroads and steamboats is admissible instead of the fastening of the packages.

(*f*) The liquid declared as liquor must be clear and sweet and have an alcoholic content of at least 35 per cent of the volume, otherwise it will not be admitted for exportation under export indemnification.

Of each kind of liquor comprised in the export consignment the content of alcohol and the total of alcohol degrees is to be stated in the exportation declaration.

In changing this provision it has been allowed by the exchequer decree of April 8, 1889, that, with regard to the export of distilled spirituous beverages not sweet, as anisette, cumin brandy, geneva, agriot cherry brandy, and liquor bitters, that are manufactured by means of distillation over ingredients or by means of admixtures, the same procedure may be had as that in regard to the exportation of liquor.

Consequently, the spirits required for the preparation of such distilled spirituous beverages for export may be procured without paying the consumption tax upon the conditions delineated in section 29, B of the executive ordinance, while for the export of such distilled spirituous beverages not sweet, especially concerning the exportation indemnification, the provisions of paragraph B, l. 2 and 3 of Appendix A of that executive ordinance are in force.

However, if the alcoholometer suffices for the establishing of the alcoholic content of such a beverage, the application of the apparatus (lit. *g*) expressly constructed for the examination of the alcohol contained in the liquor may be omitted. (Exchequer decree of April 8, 1889.)

(*g*) For the examination of the alcohol contained in the liquor, apparatus expressly constructed and alcoholometers are to be employed, with which those officials will be supplied who will have occasion to treat

liquors for export under tax indemnification.[1] For the examination of the alcoholic content contained in rum the usual alcoholometers will serve.

The consignor has the right to be present at the establishing of the alcoholic content.

(*h*) The quantity of the liquor at the exportation in bottles is to be designated by the number and capacity of the bottles, e. g., 100 bottles of one-fourth of a liter each, 50 bottles of 1 liter each, 25 bottles of 2 liters each, etc.

3. Spirits coming to export as rum are excluded from the exportation indemnification.

The indemnification is always put into account with merely 1¾ kreutzers per liter at the exportation of liquor made in casks or bottles; also in the case when its alcoholic content should be found to be more than 35° of the centigrade alcoholometer scale. For a quantity below 25 liters a tax indemnification is not rendered, whether this quantity may form the entire export consignment or a mere fraction of the same. Bottles, the capacity of which is larger than one-fourth of a liter but smaller than 1 liter, or larger than one-half of a liter but smaller than 1 liter, or larger than 1 liter but smaller than 2 liters, are placed into account with those of one-fourth of a liter or those of one half of a liter and 1 liter respectively. Also, with bottles of more capacity than 2 liters fractions of a liter remain unconsidered. (Paragraph B, l. 2 and 3 of Appendix A of the executive ordinance.)[2]

C. *Special provisions for the exportation beyond the customs line of wine to which spirits dutiable under the consumption tax have been admixed to heighten its alcoholic strength.*[3]

1. Whosoever wishes to procure spirits dutiable under the consumption tax in order to admix the same with wine destined for export, needs a special permission.

---

[1] A description and explicit information of the use of the distilling apparatus employed at this examination have been issued to the financial officers by the exchequer decree of August 10, 1888.

The apparatus essentially consists in an alembic to be heated by an alcohol lamp, and in a cooler connected with the alembic by a tube, in which cooler the vapors produced by the distillation are again made fluid.

A little bottle, which holds exactly 100 c. c. till up to a mark applied on it, serves for the measuring of the quantity of fluid to be distilled, as well as for the collection of the distilled matter. The establishing of the alcoholic content of the distilled matter is performed in a standing vessel, into which the distilled matter is transfused from the little bottle, by means of the alcoholometer added to the apparatus.

The use of the apparatus varies according to whether it is to be with regard to the examination of liquors and spirits, as also of heavy wines rich in alcohol and very sweet, or of liquids poorer in alcohol (especially wines) or, finally, of fluids very rich in alcohol (especially rum and arrack).

[2] The consigning office has always, also, to establish the alcoholic content of the liquor destined for exportation under exportation indemnification in order to be enabled to judge whether the alcoholic content reported is extant.

For the sake of the examination of the quantity and of the alcoholic content of the contents of the bottles for each package only single bottles are to be opened, upon the choice of which, however, no influence is to be allowed to the consignor.

If, however, well-founded apprehensions against the identity of the consignment, etc., occur, then the exit office, under assistance of the consignor, has to take a sample from the consignment and cause its examination by the agricultural-chemical trial station at Vienna.

Of course the assignment of the half of the inuring tax indemnification in such a case must not be made before the finding procured has arrived. (Paragraph B, l. 4 of the Appendix A of the executive ordinance.)

[3] The storage of foreign spirits free of custom duty for the saturation of wines destined for export is no longer admissible. (Exchequer decree of September 30, 1888.)

For alcohol that is poured into wine destined for domestic consumption no tax exemption takes place.

2. The permission is granted to such persons only who have not been punished either for clandestine trade or for an aggravated violation of the revenue laws relating to the spirits tax, nor for fraud, or who, bankruptcy having been declared over their property, have been acquitted of the punishable act of which they eventually may have been incriminated at the bankruptcy proceedings instituted.

In the case of an established abuse, the permission is immediately to be recalled, independently of the consequences arising by the revenue penal code. It may also be recalled if the one or the other of the obligations delineated by way of ordinance has not been fulfilled by the party.

The permission is granted by the financial board of the first instance.

3. In the application for permission for the procurement of spirits free of duty for the purpose above named is to be stated—

(*a*) The quantity of spirits destined for the alcoholization in hectoliter degrees of alcohol.

(*b*) The quantity of the wine destined for export to which the alcohol shall be admixed.

(*c*) The manufactory from which the spirits shall be procured free of duty tax.

(*d*) The kind of security to be given for the consumption tax.

(*e*) The place at which the mixture shall take place.

(*f*) The existence of secured localities adapted for the application of a reliable official supervision.

4. Before the permission is granted, the petitioner has to give the governmental treasury the security for the tax which could be imperiled by the abuse of the permission or in any other manner.

This security is to be computed in the amount of the inuring consumption tax of 45 florins per hectoliter of alcohol, and may be given in the same manner as prescribed in section 32 of the ordinance to the credit of the consumption tax.

5. With regard to the removal of the spirits destined for vinisation from a distillery or from a free warehouse in general, the provisions are in force which have been laid down in section 24 of the execution ordinance relating to the removal into a free warehouse of spirits on which the consumption tax is payable.

In the respective applications, besides this must be stated also the manufactory for which the spirits are destined, and the date and business number of the permission for the procurement of spirits on which tax has not been paid.

6. The financial official who has charge of the supervision of the spirits destined for the export wine—that is to say, the division of the financial guard in the district in which the storage localities of the party are situate—on the arrival of the consignment ascertains the numbers, marks, and figures of the packages, states the quantity and the alcoholic strength in the manner prescribed for private free warehouses, and enters the finding and the item of receipt, under which the booking into receipt register to be kept according to Appendix 37 of the collection has been made, into the two copies of the application and into the letter of advice.

With regard to the eventual deficiencies and to the consideration had for shrinkage, the provisions made for the private warehouses for spirits are in force. The copy of the application delivered by the party has to be redelivered to him, with the confirmation of the arrival

of the consignment. The copy sent by the assigning financial official, and likewise a properly attested duplicate, however, is to be annexed as voucher to the receipt. Items of the receipt register and the letter of advice, received and duly acknowledged, are to be remitted to the assigning financial official.

7. The smallest quantity of spirits, which must at least have an alcoholic tenor of 90° of the centigrade alcoholometer, presented for vinisation must not amount to less than 1 hectoliter. However, the quantity of alcohol which can be added to the wine destined for export is not restricted.

8. The admixture of the spirits with the wine destined for export may take place at the seat of a chief customs office only. The mixed wine is for the time being to be stored in magazines of the customs office, provided its exportation does not occur immediately after the admixture.

9. The admixture of the spirits dutiable under the consumption tax with the wine destined for export must be performed at the latest within a term of three months, reckoned from the day of the procurement of the spirits, or else the recipient is obliged to subsequently pay the tax accruing for the respective quantity of alcohol at the rate for 45 florins.

10. Each intended admixture of the wine with the spirits procured under the bond for the consumption tax for the purpose of export beyond the customs line has to be reported at the respective chief customs office, according to the sample *e*, in double issue, and has unconditionally to be made in the presence and under the supervision of two customs officials.

11. The custom officials, on the basis of the declaration, establish the quantity of wine destined for mixture with alcohol, as also the quantity and the alcoholic strength of the spirits; superintend the performance of the mixing, and establish the quantity of the mixture after the completion of the mixtion. Of the mixture from each vessel in which the admixture has been performed, after the fluid has been carefully stirred, a proof of about one-half of a liter is to be taken and preserved in a clean bottle, under the seal of the office and that of the party.

If there be no objection and if immediately after the mixing the official treatment for export is applied, then the consigning office enters the finding into the two columns of the exportation declaration, applies the official fastening of the package or room, remarks in the two declarations the item number of the receipt register under which the spirits used for the vinisation had been procured, and prescribes the time within which the consignment must make the exit. One copy of the exportation declaration must accompany the consignment to the exit customs office, and for that purpose is to be handed over to the party, but the second copy must be sent directly to the exit office.

A special security for the consumption tax on the shipment into a foreign country is not to be demanded with respect to the security already given at the procurement of the spirits.

If after the admixture the temporary storage in magazines of the customs office takes place, then the supervision previously provided is to be performed on the removal from the storage of the mixed wine for export.

12. The official acts of the exit office are as a rule, restricted merely to the examination of the packages and of the official fastening, as also of the quantity of the wine. Deficiencies in quantity up to 3 per cent of the declared amount before the consigning office are permitted.

When the official fastenings are found violated, or other apprehensions arise against the conformity of the declaration with the consignment,

the exit office has to take single specimens of the wine, and under designation of the packages from which they had been taken to fill them into clean bottles and to send them to the financial board of the first instance, which will cause further dispositions relating to the comparison of such specimens with those taken at the time of consignment, and eventually institute penal proceedings.

13. If in this way, even merely with one package, the nonconformity of the quality of the contents of the consignment with the declaration, or with the official finding of the consigning office is established, then the consignor is obliged to subsequently pay the consumption tax for the spirits used for the vinisation of the entire consignment. But if the prescribed conditions are fulfilled, then the exit office discharges the two declarations and enters therein the exit confirmation.[1]

As soon as the confirmation of the actual exit of the consignment into the foreign country arrives, the security given for the spirits procured free of duty becomes released.

14. Persons to whom the permit has been granted to add spirits on which the consumption tax is payable to the wine destined for export are placed under the control of the revenue office, and therefore are obliged to give reference of the procurement of their supplies of spirits on demand of the financial officials. (Paragraph C, of Appendix A, of the executive ordinance.)

D.—Exportation of spirits on which the tax is not incumbent.

I. In General.

Whosoever wants to export beyond the customs line spirits on which the tax is not payable under the claim of indemnification and repayment of tax, needs the permission prescribed in section 3 of this executive ordinance.

For the rest, also, upon this export the provisions previously adduced, sub A, find application under the following modifications:

1. Upon the export of spirits on which the tax is not payable a chief customs office or a subcustoms office of the first class hereto authorized or an official of the financial guard has to officiate as consigning office.

2. In the declaration, besides the amount of indemnification claimed, the amount of the tax to be refunded is also to be stated.

The spirits destined for consignment as a rule are to be presented to the office or official of the financial guard mentioned in the preceding paragraph. The consignors may, however, be excused from the duty of presentation by the financial boards of the first instance and the examination of the consignments as well as the application of the official fastening may be executed by the supervising officials in the very localities of manufacture or of storage themselves. In such case, however, the consignor is obliged to defray eventually the costs for conveyance and traveling of the financial officer who performs the treatment of the export consignment, according to the rate to be published by the financial board of the first instance.

3. The casks used must be officially gauged, and the official examination has to be made in accordance with the gauge mark.

---

[1] With regard to the supervision of the exit beyond the customs line, it is to be proceeded with in the manner prescribed for the exit of transit consignments. The declaration is inclosed to the register in which the exit of the consignment has to be booked, but a duplicate, likewise provided with the exit confirmation is remitted to the consigning office which has to file the same with the receipt register.

4. If the spirits on which the tax is not payable are declared for export, then security for the export is not to be given.

5. Of the export consignments dispatched each consigning office has to keep a record, which has to contain the identical columns with the exportation declaration. This record is to be closed quarterly and to be sent by way of the financial board of the first instance in charge to the resort-comptroller department, created for the customs and the consumption tax by the ministry of finances.

6. With regard to the computation and payment of the accruing indemnification, it is to be proceeded in accordance with the provisions contained in the preceding section A, l. 8 and 9 of the original.

7. To ascertain the amount of the drawback of tax, the number of the hectoliter degrees ascertained according to section A, l. 8 is multiplied with 17½ kreutzers.

The drawback of the tax is made separate from the assignment for the indemnification by means of a stamp-free assignment, freely transferable from one holder to another (indorsable) after the sample *f*, issued by the customs office through which the export is made.

The payment of this assignment is not made before six months, calculated from the day on which the exportation occurs. But, this assignment, even before the expiration of six months, is received by the treasury upon which it reads as payment for such amounts of the spirits tax which have to be rendered at this treasury, and in regard to which no drafts have been accepted by the taxpayers in consequence of the law of June 26, 1868. (Gazette of the Laws of the Empire, No. 73.)

The payment of the full drawback of the tax accruing according to the above computation has always to be rendered by that treasury at which the exportation indemnification for the identical consignment has been assigned for payment.

The payment of the amount of tax to be paid back is made to the last holder (indorsee) of the assignment against his acquit (confirmation of receipt on the back of the assignment) and against return of the assignment.

If the assignment shall be accepted in payment for amounts of the spirits tax before maturity, then the taxpayer must be the last holder of the assignment, or a cession in favor of the taxpayer must be made by the last holder.

The treasurers upon which assignments read are allowed to make payment of them at any time within one year after the day of maturity, provided no other objection prevails. As far as the payment of the assigned tax indemnification for the export of dutiable spirits is concerned, the respective provisions of section A are in force.[1]

II. *Special provisions relating to the exportation of spirits subject to the production tax which are stored free of duty for the sake of export.*

1. If the proprietor of a distillery which is subject to the production tax, but pays the same on the basis of the indications of control-measuring apparatus, is willing to destine the whole product or a part of

[1] If the assignment of the rebate tax shall be taken before maturity as payment for a tax to be rendered at the production (production tax, sec. 2*a* of the law), then there is further to be seen—

(*a*) Whether the person bound to pay really has to make a payment of production tax at the treasury called up for payment, and

(*b*) Whether he is the last holder of the assignment or a cession by the last holder in his favor is adduced.

same for export, and to claim for that sake the storage of the same free of duty, he has to make application for this permission to the financial board of the first instance, stating the quantity and the alcoholic tenor of the spirits to be stored free of duty, and at the same time to state whether it is intended to make use of that permission merely in one period of application or in several periods of application, the petition may also read for the whole period of operation.

In the petition, furthermore, the security is definitely to be designated which is to be given for the spirits to be stored free of duty. This security must completely cover the amount of tax accruing from the quantity of alcohol stated (35 kreutzers per hectoliter degree), and may be given in the manner allowed for crediting the consumption tax. (Section 32 of the execution ordinary.)

2. By virtue of the permission granted for storage free of duty, of which the supervising official as well as the revenue office is informed, the proprietor, at the respective monthly settlement, has to claim the segregation of the quantity of alcohol destined for storage free of duty from the result of the settlement, which segregation is made in the manner designated in section 22 of this execution ordinance.

3. The quantities of alcohol segregated for storage free of duty at each monthly settlement must be exported at the latest within twelve months, from such segregation, or else the proprietor is obliged to subsequently pay the production tax accruing thereon.

4. A separate storage under official concurrent fastening is indeed not required in regard to these quantities of alcohol, but the proprietor is obliged to keep a special account register of the same, according to the sample annexed, in which is to be entered as debit the quantities of alcohol segregated at the settlement for storage free of duty, and as credit the quantities of alcohol exported by virtue of the relative exportation declarations and the shrinkage during storage (section 25 of the execution ordinance). The respective entries have to be countersigned by the intervening financial official.

The printed matter for this account register in paged and paragraphed pamphlets, the thread of which lies under official seal, is to be procured from the office or official to be designated by the financial board of the first instance against the payment of the costs for the make up. This office before issuing has to place upon each pamphlet the name and the place of each distillery for which the register is procured.

The account named is to be closed after the expiration of each period of production and together with the record mentioned under Section D, I, l. 5, to be sent to the board of censorship by way of the financial board of the first instance. As for the rest, the previous provisions adduced under A are in force in relation to the exportation.

The casks used, however, must be officially gauged and the official examination of the quantity must be made in accordance with the gauge mark.

Active security, however, for the quantity of alcohol stored free of duty must already have been given; a renewed security for the exportation is not to be demanded. Yet with regard to the conveyance and traveling expenses of the financial officials acting as consigning office, the provisions of Section D, I, l. 2, are in force.

PATTERN *b* OF SUPPLEMENT II.

[Pattern *b* to Appendix A of the executive ordinance.]

No. ——. Fl. ——.

ASSIGNMENT.

For the consignment of distilled spirituous liquor in —— packages with —— hectoliter degrees (liters) of pure alcohol ascertained, which ——— ——— (name, occupation) ——— in ———, on ———, 18——, has declared for exportation against exportation indemnification, and which has passed the custom line on the ———, 18——, to ———, a total indemnification of —— florins, —— kreutzers, in words —— florins —— kreutzers Austrian currency accrues.

Of that amount the T. R. or R. Hung ——— office in ——— will pay to ——— ——— or order the one-half—that is to say, the amount of ———, after the letter of advice from the exit office has arrived; of the other half, however, record is to be made till further notice, by virtue of the disposition of section 9 of the spirits-taxation law.

By the T. R. ——— office in ———, on the ——— 188——.

NOTE.—The amount for which the assignment reads is paid to the last holder (indorsee). No liability for the genuineness of the signatures of the indorsees is assumed.

PATTERN *a* TO SUPPLEMENT II.

[Pattern *a* to Appendix A of the execution ordinance.]

Crownland, ———.

Financial District, ——.
Revenue District, ——.
Control District, ——.

1. Delivered on the ———, 18——.
2. Recorded upon the report register or upon the record under item No. ——.
3. Examination and comparison of the declaration with the original, duplicate, triplicate, quadruplicate of the same.

——— ———,
Financial Official.

DECLARATION.

Original, duplicate, triplicate, quadruplicate.

The undersigned ——— in ———, reports to the T. R. ——— in ——— by virtue of the permission of the T. R. ——— in ——— of ———, 18——, business number ——, the consignment of distilled spirituous liquor stated within with the claim upon tax indemnification, as also ——— for the export beyond the custom line by means of ———, over the T. R. or R. Hung. ——— office in ——— to ———.

The consignment, officially treated in reglementary manner, has been discharged with the obligation to present the same to the T. R. or R. Hung. ——— office in ——— till ———, 18——, for treatment for exit.

T. R. ——— in ——— on the ———, 18——.

STATEMENT OF THE CONSIGNOR.

The undersigned assumes with the above declaration the obligation to present the consignment of ———, stated on the following page, in unchanged quantity and quality within the designated term for official treatment for exit, as also to be liable for the consumption tax at the higher rate proportionate to the same.

These obligations cease in case the discharge of this declaration gives proof that the above designated obligation has been complied with.

——— on the ———, 18——.

N. N.

I.—*Declaration of the consignor.*

Packages of which the consignment consists.				Distilled spirituous liquor.						Claimed of the total quantity.						
					At the temperature of +12° Réaumur.					Exportation indemnification.						
Number.	Kind and mark.	Figures.	Gross weight (kilograms).	Kind.	Quantity of each vessel.	Alcoholic content according to the centigrade alcoholometer.	Hectoliter degrees (liters) of pure alcohol for each vessel and total of the same.	Removed at the rate of the consumption tax of —— kreutzers.	Item number of the trade book of the consignor under which the consignment was credited.	At the rate of —	To the amount of —	Drawback of the production tax at the rate of 17½ kreutzers.	To be assigned.		The assignment for payment is to be delivered to —	Remarks.
					Liters.	Liters.				Kr.	F. K.	F. K.	For—	At—		
1			2	3	4	5	6	7	8	9	10	11	12		13	14

REMARK.—In column 14 is to be stated what security has been given.

II.—*Official finding.*

Vessels.			Ascertained quantity according to the weight (kilograms).						Reduction—			Quantity of pure alcohol.			Mode of freighting—									
											Of the quantity—				Under lock of the lading room.				Under lock of the packages.					
Number.	Kind and mark.	Figures.	According to the gauge mark in liters.	Tare.	Gross.	Net.	According to the centigrade alcoholometer.	At the temperature of degrees according to Réaumur.	Of the ascertained alcoholic content to the true strength, according to Table I.	In liters to the true volume, according to Table II.	In kilograms net to liters, according to Table III.	Hectoliter degrees (liter) of each vessel and the total thereof.	Removed at the rate of —— kreutzers.	Finding with regard to the amount of the exportation, indemnification, and eventually, also, drawback of tax.	Figures of the packages.	Figure and mark of the railroad car or the hold of the ship.	Number.	Kind.	Of the locks (fastenings).	Figures of the packages.	Number.	Kind.	Of the locks (fastenings).	The letter of advice was sent off— On the— To the—	Credited in the account of the consumption tax, item number.	Remarks.
15			16	17	18	19	20	21	22	23	24	25	26	27	28	29	30			31	32			33	34	35

DISCHARGE.

1. Delivered on the ———, 18——.
2. Booked in the ——— register under item No. ——.
3. Result of the official examination with regard to —.
(*a*) The packages and official fastenings (locks).
(*b*) The quantity according to the gauge mark.
(*c*) The quantity according to the weight.
(*d*) The alcoholic content and the temperature.
(*e*) The reduction of the apparent strength upon the true strength (Table I).
(*f*) The reduction upon the true volume (Table II).
(*g*) The reduction of the net weight upon the volume (Table III).
(*h*) The amount of the exportation indemnification (eventually also of the drawback of the production tax).
(*i*) The surplus or deficiency stat ed.
4. Statement whether any, and what amount, of the consumption tax is to be paid by the consignor for the deficiency of alcohol ascertained after deduction of the admissible per centum of shrinkage.
5. Proof of the exit beyond the custom line.
(*a*) At a boundary custom office the above consignment has to pass under accompaniment of the———.
On the ———, 18——, has passed on the ———, 18——, according to ———.
(*b*) At a chief custom office in the interior of the custom jurisdiction:
a. The above consignment, consisting of ——— packages, has been assigned for exit over the T. R. or R. Hung ——— custom office in ——— to ———, under fastening effected by seal of the lading room of the railway car or ship hold, mark ———, No. ——, with note of declaration of ———, 18——.
β. The consignment, according to exit-record item No. ——, has passed on the ———, 18——, to ———, after the fastenings of the ——— office had been removed.
6. The assignment for payment with regard to the exportation indemnification, with the admissible amount of —— florins and —— kreutzers, or with regard to the drawback of the production tax per —— florins and —— kreutzers has, on the ———, 18——, under No. ——, been issued and advised to the pay station ——— in ———.
7. Entered upon the record over exportation indemnifications advised under item No. —— in T. R. or R. Hung ——— office in ——— on the ———, 18——.

NOTE.—If the quantity has been established at the dispatching by the consigning office according to the net weight, then the discharging office may be satisfied with the gross weighing, provided no difference with regard to the alcoholic content results.

PATTERN *c* OF SUPPLEMENT II.

[Pattern *c* of Appendix A of the execution ordinance.]

Crown land ———. R. T. ——— office ———.
Financial district ———.

Notice relating to the exported quantities of alcohol for which the accruing export, indemnification, or drawback of tax has been paid or noticed at this office or treasury for the production period of 18— to 18—.

Item number.	Date.	Number and date of declaration.	Exporter.			Quantity of the exported liquor (liters).	Quantity of the exported spirits (hectoliter degrees [liters] of pure alcohol).	Accruing export indemnification.		Amount of restitution of tax.	Of the office—	Of the—	Number.	Under restitution register item.	Date.	Of this report indemnification was—			Remarks.
								At the rate of—								Paid the amount of—		Noticed the amount of—	
			Name.	Rank.	Residence.			Kr.	Fl.kr.	Fl.kr.						1¼ kreutzers per liter. Fl.kr.	5 kreutzers per hectoliter degree. Fl.kr.	Fl.kr.	
1	2	3	4	5	6	7	8	9	10	11	12	13	14	15	16	17	18	19	20

PATTERN *d* OF SUPPLEMENT II.

[Pattern 23 to section 29 B of the execution ordinance.]

Crown land ———. Financial district ———.
Tax district ———.

Record of ——— in ———, conscri. No. ———, relating to the quantities of alcohol produced free of duty and used for the preparation of liqueur or rum for exportation, as also relating to the quantities of liqueur and rum exported beyond the customs line within the fixed term.

Debit (entry).						Credit (release).						
	For the preparation of liqueur or rum for exportation.						Of the quantities of liqueur or rum produced, there have—					
							According to the discharge of the declaration.					
Item number.	According to report number and date.	Used quantity of spirits in hectoliter degrees (liters) of pure alcohol.	The term within which the next-standing quantity of alcohol is to be shipped abroad in liqueurs or rum.	Signature.	Remarks.	Item number.	Number.	Exit on the—	Kind.	Quantity (liters).	Signature.	Remarks.

PATTERN *d* OF SUPPLEMENT II.

[Pattern *e* to Appendix A of the execution ordinance.]

Crown land ———.

Financial district ———.
Revenue district ———.
Control district ———.

1. Delivered on the ———, 18——.
2. Recorded in the receipt register under item No. —— of ———, 18——.
3. Examination and comparison of the declaration with the original or duplicate of the same.

———— ————,
Financial Official.

DECLARATION.

Original, duplicate.

The undersigned, ———, in ———, reports to the I. R. ——— in ———, by virtue of the permission of the I. R. ——— in ———, of the ———, 18——, business No. ——, the within-stated consignment of ———, blended with alcohol for export over the customs line by means of ——— over the I. R. or R. H. ——— office in ——— to ———.

The consignment officially treated in reglementary manner has been discharged with the obligation to present the same to the I. R. or R. H. ——— office in ———, till ——— 18——, for treatment for exit.

I. R. ——— in ——— on the ———, 18——.

STATEMENT OF THE CONSIGNOR.

The undersigned assumes with the above declaration the obligation to present the consignment of wine blended with alcohol, stated within, in unchanged quantity and quality within the designated term for official treatment for exit, as also to be liable for the consumption tax proportionate to the quantity of alcohol contained therein.

Those obligations cease in that case only when the discharge of this declaration produces the proof that the above-designated obligation has been complied with.

——— on the ———, 18——.

N. N.

PATTERN *e* OF SUPPLEMENT II.

[Pattern *d* of Appendix A to execution ordinance.]

I. Declaration of the consignor.											II. Official finding.																	
Packages of which the consignment consists.				Spirits at the temperature of + 12° Réaumur.				Performance of the act of alcoholization (vinitization).				Packages of which the consignment consists.			Spirits at the temperature of + 12° Réaumur.			Act of alcoholization (vinitization).		Mode of freighting.								
																				Under lock of the lading room.				Under lock of the packages.				
Number.	Kind and mark.	Figures.	Gross weight (kilograms).	Quantity (liters) which is destined for the mixture.	Alcoholic content, according to the centigrade alcoholometer.	Hectoliter degrees (liters) of pure alcohol.	Place.	Day.	Hour.	Remarks.	Number.	Kind and mark.	Figures.	Quantity (liters) which has come to the mixture.	Alcoholic content, according to the centigrade alcoholometer.	Hectoliter degrees (liters) of pure alcohol.	Description and confirmation.	Product yielded (liters).	Figures of packages.	Figure and mark of the railroad car or of the hold of the ship.	Number of locks.	Kind of locks.	Figures of packages.	Number of locks.	Kind of locks.	Remarks.
1			2	3	4	5	6	7	8	9	10	11			12	13	14	15	16	17	18	19	20	21	22		23

DISCHARGE.

1. Delivered on the ———, 18——.
2. Booked in the ——— register under item No. ——.
3. Result of the official examination with regard to:
(*a*) The packages and official fastenings.
(*b*) The quantity of wine blended with alcohol.
(*c*) The eventual taking of samples.
(*d*) The deficiences stated.
4. Proof of the exit beyond the custom line:
(*a*) With a boundary custom office the above consignment has to pass under accompaniment of the ———.
On the ———, 18——, has passed on the ———, 18——, according to ———.
(*b*) At a chief custom office in the interior of the custom jurisdiction:
α. The above consignment, consisting of ——— packages, has been assigned for exit over the T. R. or R. H. ——— custom office in ——— to ———, under fastening effected by ——— seal of the lading room of the railway car or shiphold mark ———, No. ——, with note of declaration No. ——, of the ———, 18——.
β. The consignment, according to the exit record item No. ——, has passed on the ———, 18——, to ——— after the fastenings of the ——— had been removed.
T. R. or R. H. ——— office in ———, on the ———, 18——.

PATTERN *f* OF SUPPLEMENT II.

[Pattern *e* to Appendix A of the execution ordinance.]

No. ——. Fl. ——.

ASSIGNMENT.

Six months after the ——, 18——, the T. R. or R. H. —— in —— to —— or —— order, to pay the amount of —— as drawback of the production tax for consignment of —— liters of distilled spirituous liquor in —— packages, with ascertained —— hectoliter degrees of alcohol, which has passed the custom line on the above date, and which —— in —— on the ——, 18——, has declared for exportation with the claim upon drawback of the tax.

From the T. R. —— office in ——, on the ——, 18——.

NOTE.—The amount for which the assignment reads is paid to the last holder (indorsee). No liability for the genuineness of the signatures of the indorsees is assumed.

PATTERN *g* OF SUPPLEMENT II.

[Pattern *f* to Appendix A of the execution ordinance.]

Account register, relating to the quantities of alcohol segregated for storage free of duty for export, according to the settlements made by the distillery of —— in —— Conscrip. No. ——, as also the reference of their exit beyond the custom line.

Debit (entry).							Credit (release).							
According to settlement—					Signature.				According to the discharge of the declaration.			Signature.		
Number.	Date.	For the time— From—	For the time— To—	Hectoliter degrees (liters) of pure alcohol segregated for storage free of duty.	Of the manager of the concern.	Of the financial official.	Notice-item number of the declaration.	Date.	Passed into the foreign country.	Hectoliter degrees (liters) of pure alcohol.	Storage shrinkage in liters of alcohol.	Of the manager of the concern.	Of the financial official.	Remarks.
1		2		3	4		5	6	7	8	9	10	11	12

SUPPLEMENT III TO SECTIONS 6, 66–69, AND 73 OF THE LAW.

REGULATIONS FOR THE SPIRITS DESTINED FOR USE FREE OF DUTY.[1]

I. *General provisions.*

1. Whosoever wishes to procure free of duty spirits, subject to the consumption tax, for industrial purposes, inclusive of the manufacture of vinegar, for the purposes of cooking, heating, cleaning, and illuminating, or for medicinal or scientific purposes, requires a special license.

Free of duty spirits are excluded from any use which serves for the preparation of manufactures containing alcohol fit for human consumption as beverage.

The permission to use spirits free of duty shall be upon the condition that the spirits have been methylated—that is to say, have been made unfit for human beverage. Only spirits used for medicinal and scientific purposes form an exception, under definite conditions and precautions.

The procurement of the spirits to be methylated may be made from a distillery, subject to the consumption tax, or from a refinery declared as free warehouse.

2. The permission, aside from the special conditions relative to the mode of use of the spirits to be procured, is granted to such persons only as have not been punished either for clandestine trade or for an aggravated transgression of the revenue laws, or for fraud, and over whose property bankruptcy has not been declared, or who have been acquitted in the bankruptcy proceedings instituted of the punishable act of which they had been accused.

In the case of an abuse proved, the permission is immediately to be recalled, independently of the consequences accruing from the penal revenue code. It may also be recalled if the one or the other of the duties prescribed by this ordinance, or later to be prescribed by the way of ordinance, has not been fulfilled by the party.

The permission is granted by the financial board of the first instance.[2]

---

[1] This regulation forms Appendix E in the gazette of ordinances, Appendix D in the execution ordinance. (Exch. decree of April 10, 1888, Gov. Gaz. of Laws, No. 133, Gaz. of Ordin., No. 33.) The text printed above the stroke line is identical with the text contained in Appendix D of the Government Law Gazette, No. 133, provided a special supplementary ordinance is not quoted.

[2] The financial board of the first instance has to give immediate information of each such permission, as also of each subsequent change eventually occurring by virtue of section 4, lit. *d* of Paragraph I of the regulations, made in the source of procurement or in the quantity of the spirits which is to be removed from the source of procurement indicated to the financial official who is charged with the supervision of the source of procurement—that is to say, of the distillery or of the free warehouse connected locally with a refinery, and indeed to give direct information if the station of this supervising official is found in the same crown land, represented in the Imperial Diet in which the permitting financial board has its seat; in other cases, however, the relative T. R. financial board of the land or the royal Hungarian direction of finances, or the land government at Sarajevo, has to be applied to for the mediation of the information, according to the situation of the station of the supervising official in another crown land represented in the Imperial Diet, or in a land of the Hungarian Crown, or in Bosnia and Herzegovina.

It is, of course, the duty of these boards to comply with such request without delay.

The supervising officials have to annex the informations of such kind coming to them as vouchers to the application register (sec. 24 of the Ex. Ordin.), with reference to the items under which the removal of spirits for use free of duty is made by virtue of these informations. (Exch. decree of October 6, 1888.)

3. In the buildings and complexures of buildings[1] in which the methylation or the industrial process takes place for which the spirits free of duty are used, no sale over the bar, no retail sale, or retail trade[2] in spirituous liquors must be carried on. An exception for the time from September 1, 1888, to the end of February, 1889, is granted to vinegar manufacturers who prove that they are not able to immediately carry out the changes in the operation made necessary for compliance with the preceding provisions.

Those who have obtained the permission are obliged to keep their commerce and trade books in regulation order, and to allow the financial officials upon each request to examine the same, as also admission into their manufactory, and storage rooms, in order to ascertain the supplies of methylated spirits; and, if it be a trade to which a peculiar kind of methylation of spirits has been granted, to permit the officials to observe the technical proceedings, to state and control and compare with the books the supplies of raw materials, especially of spirits and of products made by means of the same.

They must also be provided with an alcoholometer and thermometer, and with a gauged scale fit for the weighing of casks filled with spirits, together with gauged iron weights, and must put these instruments at the disposition of the financial officials upon their every request in the trade room.

Besides this, such persons have expressly to declare that they submit to the control measures already generally passed, as also especially to be passed from time to time.

4. In the application above mentioned there is to be stated—

(*a*) For what purpose the methylation is to be performed.

(*b*) If special conditions have been prescribed for some of these purposes—the fulfillment of these conditions.

(*c*) The accidental annual quantity[3] of the spirits destined for methylation in hectoliter degrees (liters) of alcohol.

(*d*) The place of distillery or the free warehouse connected with a refinery from which the spirits to be denaturalized are procured.[4]

The source of procurement, however, may be changed any time on previous timely notice to the financial board of the first instance.

(*e*) The kind of security for the consumption tax.

(*f*) The existence of secured localities suitable for the application of a reliable official cofastening.

5. It is incumbent upon the financial boards of the first instance, before the granting of the permission, to solicit from the chamber of commerce and trade in the district in which the enterprise is situate

---

[1] A complexure of buildings certainly exists when two or several buildings have an internal connection with each other.

[2] By the expression "retail trade" is to be understood the trading in distilled spirituous liquors in closed packages of merely 1 liter and below in the sense of the law of June 23, 1881, Gov. Law Gaz., No. 62, sec. 2. (Exchequer decree of February 12, 1889.)

[3] The year within which a certain quantity of spirits procured free of duty in the sense of the relative permission may be used is to be computed from the point of time when the permission comes into force. The same holds good relating to the computation of the duration of the permission, provided such a one is fixed, to which the rule is not to be applied. (See, however, Section IV.) As for the rest, it is left to the option of the financial boards, even when a limitation of the duration of the permission has not taken place, after the expiration of a certain period, to examine whether the yearly quantity allowed corresponds with the actual circumstances, and accordingly to cause eventually a corresponding modification of the same. (Exchequer decrees of June 25 and December 3, 1889.)

[4] There is no objection to name in the relative application several sources of procurement (distilleries or free warehouses of a refinery).

the information whether the statements made in the petition relating to the kind of trade establishment, the extent of operation, etc., correspond with the actual facts, or whether and to what extent this is not the case.

The financial board thereupon, in the disposition of the petition, as a rule must let itself be guided by the opinion rendered by the chamber of commerce and trade.

6. Before the permission is granted the petitioner must give to the exchequer the security for the tax which might be endangered by the abuse of the permission or in any other manner.

The security is to be calculated in the amount of the consumption tax, at the rate of 45 florins per hectoliter of alcohol, accruing for the accidental bimonthly supply of alcohol,[1] and may be given in the same manner as appears prescribed relating to the crediting of the consumption tax in section 32 of the executive ordinance and section 79 of the law.[2]

7. With regard to the removal of the spirits destined for use free of duty from a distillery or from a spirits refinery declared as a free warehouse, in general the provisions made in section 24 of the executive ordinance for the removal of spirits under the bond of the consumption tax into a free warehouse are in force.

In the relative applications, besides this, also, the enterprise for which the spirits are destined, as also the date and business number of the relative permission for the procurement of spirits standing under the bond of the consumption tax, must be stated.

8. The financial officer to whom the spirits destined for use free of duty have been referred ascertains on the arrival of the consignment the numbers, marks, and figures of the packages, examines the fastenings officially applied, and ascertains the quantity and the alcoholic strength. The ascertainment of the alcoholic strength is made in the manner prescribed in section 24, I, l. 4, of the executive ordinance. On the ascertainment of the quantity, if the dispatching has been done at the consigning office with the gauge mark, the proceeding will be in the manner prescribed in section 24, I, l. 3, of the executive ordinance, and if the dispatching took place on the part of the consigning office by means of the ascertainment of the weight, then in the manner prescribed in section 24, I, l. 5, of the executive ordinance (to the sections 66–68 of the law).

Thereupon the financial official places the finding and the item of receipt under which the booking into the receipt register[3] to be kept has been made, into the two copies of the application and into the letter of advice.

With regard to the eventual deficiencies and to the consideration had to shrinkages, the dispositions made for the private free warehouses for spirits in Appendix C are to be observed.

The copy of the application delivered by the party (original) is to be returned with the acknowledgment of the arrival of the consignment of the party. The copy sent by the assigning financial official, and like-

[1] Vinegar manufacturers have exceptionally, in several cases, been allowed to give the security merely for the quantity of alcohol to be procured under the bond of the consumption tax and for that on hand as stock, so that then the security given for the quantity of alcohol used may be utilized for further procurement of spirits.

[2] The financial boards have to examine whether a renewal of the security does not become necessary, therefore, because the security becomes perhaps out of force on account of the expiration of the time for which it has been given. Then the security is to be renewed before the expiration of the term, since otherwise the permission would have to be recalled. (Exchequer decree of June 25, 1889.)

[3] This receipt register (printed matter strictly put into account) is to be kept according to Supplement 37 of the collection.

wise properly acknowledged (duplicate), however, is to be annexed to the item of receipt of the receipt register as voucher, and the received letter of advice, properly acknowledged, is to be remitted to the assigning financial officials.

II. Special provisions relating to methylation.

1. The methylation is performed by mixing with the spirits the prescribed methylene.

2. From the methylation based upon the exemption from duty—with the exception of the spirits for the manufacturing of vinegar—all the spirits are excluded that have an alcoholic strength of less than 80° of the centrigrade alcoholometer, as also spirits perfumed or otherwise blended or already methylated.

3. The quantity of spirits to be presented for methylation must amount to at least 5 hectoliters of alcohol.[1]

4. Each intended methylation of spirits is to be reported in two written copies, according to Appendix *a*, to the financial officer assigned thereto in the respective permission.

The application has to contain—

(*a*) The quantity and the alcoholic strength of the spirits to be methylated and the total quantity of alcohol contained therein.

(*b*) The quantity and the quality of the methylene with the statement whether the latter has already been subjected to the prescribed examination.

(*c*) The point of time in which the act of methylation is to be performed.

Since use of the methylated spirits can also be made for industrial purposes, therefore the control fee of 1½ kreutzers per liter of alcohol is to be paid before the methylation.[2]

This control fee is to be paid at the relative revenue office for the entire consignment assigned, and before the methylation, should the latter refer to the entire consignment or only to a portion of the same.

The payment is made by means of a special application according to Appendix *b*, to be delivered in a single copy to the revenue office. Before the application is delivered it has to be submitted to the supervising official, who by countersigning it must ratify the conformity with the dates of the relative item in the receipt register.[3]

5. The methylation is permitted to be performed solely in a tub of sufficient size expressly provided, which tub has previously officially been gauged[4] in regard to capacity.

6. The methylation of spirits procured under the bond for the consumption tax must be performed at the latest within the term of one

---

[1] This provision is in force, like in general all the provisions of Section II, as well for the methylation with the common methylene as also for that with any of the especial methylenes.

[2] The control fee has also to be paid for spirits methylated by the common methylene. (Exch. decree of Sept. 3, 1888.)

[3] The booking of these applications is done in the pay register for the control fee, from which an acknowledgment is made out in the form of a payment check The application is annexed to the pay register. (Appendix E, Sec. II, l. 4, clause 7 and 8 of Execut. Ord.)

[4] The ascertainment of the capacity of the tubs destined for the methylation on account of the circumstance that its performance by the gauging office is not prescribed, must be done by the financial officials in the presence of the taxpayer or his agent. The measures for fluids (liter vessel, 10-liters vessel, or 20-liters vessel), requisite for this official gauging must, however, answer to the requirements of the gauge regulation, especially to the prescription of the ministry of commerce of March 1, 1875 (Javern. Law Gazette, No. 17, ex 1875) relating to the admission of metallic measures for fluids. (Exchequer decree of September 26, 1888.)

month counted from the day of procurement, or else the recipient of the spirits is obliged to pay the consumption tax at the higher rate accruing for the relative quantity of alcohol.

7. The performance of the methylation, without any exception, must take place in the presence of two financial officials destined thereto, one of whom must belong to the higher rank of qualified officers.[1]

If the recipient is not otherwise legally bonded for the payment of the control fee, he must make good to the exchequer the accruing fees for traveling expenses for the supervising financial officials[2] assigned to him.

8. Spirits methylated by the common methylene (III A of the regulations) may be put into ordinary commerce.

9. It is prohibited—

(*a*) To segregate again entirely or partially the methylene from methylated spirits, or to add to the methylated spirits ingredients by which the effect of the methylene, with regard to taste or smell, is changed.

(*b*) To sell or expose for sale spirits which have been treated in such manner (lit. *a*).

Retailers of spirits which have been methylated with the common methylene are obliged to expose a copy of the preceding prohibition in a clearly visible place in their sales rooms.

10. The financial officials must see that the spirits presented for methylation have not already been methylated or perfumed or otherwise blended, and that they, in regard to quantity and alcoholic strength, are in conformity with the application for methylation. When in these regards no objection occurs, or the same has been removed in a satisfactory manner, the methylation is allowed to proceed. But the latter must be performed in such manner that a thorough mixture of the methylene with the spirits is effected by stirring. After the accomplishment of the methylation, at which the financial officials must be present without any interruption, the total quantity of the methylated spirits is ascertained.

They have to enter the performance of the official act and its success upon the two copies of the application.

The one copy of the application acknowledged is returned to the party for his protection, while the other copy must be annexed to the relative item of the receipt register, or in case the latter has been sent in subsequently, to the following receipt register.[3]

---

[1] The official acts of methylation may be performed, in conjunction with a second financial official, by the independent members of the financial guard acting as leaders of the control district as well as by those members who, in the case of sickness or furlough of a commissioner or a superior commissioner of the financial guard, and in the case of the vacancy of such an office, are assigned to officiate as substitutes according to the constitution and service regulation prescribed for the financial guard (the latter during the time of their substitution). (Exch. decree of December 26, 1888.

[2] The leaders of the control district of the financial guard are not entitled to the payment of special traveling expenses from the exchequer, since the same receive an annual gross sum for mileage traveling expenses for all services incumbent upon them by the existing regulations, in accordance with section 29 of the reorganization principles of the year 1869, Ordinance Gazette, No. 19. The financial guardsmen intervening at these official acts are solely entitled to the mileage and traveling expenses in the cases provided in section 31 of the reorganization principles mentioned, which expenses are to be paid from the budget for the financial guard. From the consumption revenue proceeds merely those reglementary fees are to be paid to which the tax and customs officials are entitled when they must exceptionally be intrusted with the performance of official acts of methylation outside of their station.

[3] The closest observation of all the provisions relating to the performance of the methylation, especially also of those provisions which concern the situation of the locality of methylation whenever the methylation is done for the proprietor of a

11. The financial officers are entitled to make searches during the regular operation of the trade with those persons who have obtained the permission for methylation, as also with those who procure methylated spirits and sell them at retail, and in case of suspicion, to take sample specimens of the spirits in order to cause a chemical examination of the same.[1]

12. Persons who desire to sell at retail spirits methylated by the common methylene must have the permit of the financial board of the first instance,[2] and are obliged, upon request of the financial officials, to prove by means of the sale tickets the procurement of the methylated spirits.[3]

III. Relative to the methylenes and to the special dispositions made with regard to the methylene.

A. Common Methylene.

1. Common methylene is composed of a mixture of two parts of wood spirits and one-half part of pyridine bases, which is added to the spirits to be methylated in the proportion of 2 or 2½ liters to each 100 liters of pure alcohol.

The quality of the several ingredients used for the preparation of the mixture must answer to the requirements stated in Appendix *I*. By virtue of the exchequer decree of August 15, 1889, Govern. Law Gazette No. 130, Ordinance Gazette No. 13, besides the mixture hereto prescribed of two parts of wood spirits and one-half part of pyridine bases as common methylene from September 1, 1889, are also to be added 20 cubic centimeters of a solution of phenol phthaleïn in spirits, and since the coming into force of the exchequer decree of April 5, 1890, in wood spirits, which show 90 to 95 per cent volume by the official alcoholometer to each 100 liters of alcohol of the spirits to be methylated.

Supplies of spirits already methylated by the common methylene up to this time, provided they exceed 1 hectoliter, would have to be blended subsequently at the latest by August 31, 1889, with the corresponding quantity of phenol phthaleïn, under the intervention of a financial official; yet this blending as an exception could be done in the preserving vessels. (Exch. decree of August 15, 1889.)

2. The methylation by the common methylene is granted to such persons only who not merely answer to the general requirements adduced in section I, but who are expected to report annually at least 60 hectoliters of spirits for methylation.

---

distillery or of a free warehouse for refining. The closest supervision by the officials for the sake of the prevention of abuses at the methylation, is required. (Exch. decrees of September 13, of October 18, 1889, and of February 17, 1890.) In those decrees also hints relating to the abuses possible at methylations have been given to the officials. As relating to the situation of the localities of methylation for the methylation of spirits for proprietors of distilleries and free warehouses of refineries, see the annotations to sections 70 and 75 of the law.

[1] This taking of specimens has to be done in the presence of an officer of the financial board, if possible. (Exch. decree of October 15, 1888.)

[2] The granting of this permit is not dependent upon a special presupposition; particularly the provisions of section I, l. 2 of these regulations do not find any application upon the retailers of methylated spirits. (Exch. decrees of September 22 and November 27, 1888.) The petitions for the granting of the procuring and retailing of methylated spirits are free of stamp duty, as also the granting of the same by the financial board.

[3] See in regard to this the provisions of section III, A Z of these regulations.

3. The procurement of the common methylene is left to the party authorized to methylate.

For methylation, however, only such common methylenes may be used as have been subjected to an examination by experts before they have been used, and that have remained under official fastening from the taking of the specimen to the time of use.

The examination must be made by the expert officials assigned thereto by the financial board of the land, at the expense of the party for whom the methylation is performed, which officials must conduct themselves at the examination in accordance with the instruction annexed (Appendix *e*).[1]

4. For this purpose two financial officials, on request of the party, have to take of the material destined for the methylation (wood spirit and pyridine bases) in the presence of the party, two specimens, each in the quantity of about one-half of a liter, pour them into clean bottles and place the same under the official seal and under the seal of the party. One specimen must be sent to the official charged with the examination, but the duplicate of the specimens must be taken into the custody of the financial officers, and when the methylene has been declared proper, they will guard the same till it has been completely used.

Before the specimen is taken the fluid from which it is to be taken must be properly stirred up.

If the methylenes are found in several vessels, then the specimens have to be taken from each vessel, and upon each specimen the number of the vessel from which it was taken is distinctly to be marked.[2]

5. Immediately after the taking of the specimens the vessels are to be put under official fastening, and besides that to be taken under official joint lock.

In the same manner also the duplicate specimens mentioned in point 4 are to be kept.

6. Not before the finding confirming the proper quality of the methyl-

[1] It seems to be of particular importance that the examination be made by governmental expert officials. (Exch. decree of September 9, 1888.)

[2] Special attention must be given that the specimens, when the methylene is found in several vessels, are taken separately from each vessel, and that the specimens thus taken are not mixed. Should, however, request be made by a party that the methylene (wood spirits or pyridine bases) taken from different vessels should be examined in common, then this could be admitted merely under the presupposition that the contents of all the vessels had previously been poured into one vessel, and that the methylene had been therein completely mixed under the supervision of the financial officials, and that the specimen had been taken from said vessel or mixture.

After the taking of the specimens, the methylene—which is solely under the supervision of the revenue officials—may be brought back into the several vessels. Before the taking of the specimens in every case the methylene to be exemplified is thoroughly to be mixed either by stirring up with a rod or by rolling up and down of the cask, and thereupon the specimen is to be taken in the quantity prescribed. Each specimen is to be placed in a clean, dry bottle, best into one of tin, which previously has to be rinsed with small quantities of the relative methylene. The bottle thereupon has to be closed, to be put under the official seal and the seal of the party, and to be provided with a paper label, which, along with the date of execution and with the signature of the financial official performing the taking of the specimen, has to contain the following: The name of the consignor and of the place of consignment; the day of the taking of the specimen; the description of the vessel from which the specimen has been taken; the quantity of weight of the methylene contained in the relative vessel.

The paper labels have to be placed lengthwise around the bottle, the written side facing the same, and to be fastened with a string in such manner that they do not come off even during the transportation.

The one specimen well packed is to be sent without delay to the relative examining official and the latter has to be advised thereof under the above statement.

The second specimen is to be kept in accordance with the ordinance sub. *l* 4 of this paragraph. (Exch. decree of September 9, 1888.)

enes has been received, may the common methylenes be used for methylation, and the same, in accordance with the above provisions, must be kept under official fastening and under official joint lock till they are completely made use of.

According to paragraph I of the exchequer decree of August 15, 1889, the phenol phthaleïn solution is exclusively to be procured from the proper officer upon payment of the cost, and is dispensed, according to requirement, in small bottles officially sealed in quantities of 100, 200, 500, and 1,000 cubic centimeters.

The solution must always be kept in a dark, cool place.

The preparation of the same is performed in such manner that 10 kilograms of phenol phthalein, the quality of which must answer the requirements prescribed in Appendix *f*, are dissolved in 93 liters of spirits of 90 to 95 volume per cents of alcoholic tenor; or, since the exchequer decree of April 5, 1890, came into force, in 93 liters of wood spirits, which shows 90 to 95 volume per cents on the official alcoholometer. (Exch. decree of August 15, 1889, Govern. Law Gazette, No. 130.)[1]

---

[1] Before the preparation of the solution destined for the methylation, the examination of the phenol phthalein with regard to its quality must be performed by an expert official. The quantity of the specimen to be taken for that purpose from each consignment is to be fixed by the expert official in accordance with the provisions of the instructions for examination. (Appendix *f* of this supplement.) The specimen is to be placed under official seal.

The preparation of the solution, as also the sale of the same, has to be made by the financial economate of the land. For the purpose of the preparation of the solution, 10 kilograms are dissolved in 93 liters of alcohol or of wood spirits of 90 to 95 volume per cents.

The solution is best effected in such manner that the phenol phthalein, may, besides what usually occurs in the form of a fine powder, be slowly dropped into the spirits (wood spirits) under constant stirring. If the phenol phthalein contains lumps, then these are previously to be crushed. When all the phenol phthalein is dropped into the spirits (wood spirits), then the stirring is done from time to time till all the phenol phthalein (perhaps settled at the bottom and not dissolved in the beginning) is dissolved. A sediment must not by any means remain.

As soon as the solution has been perfectly accomplished, the brownish fluid thereby produced is racked into bottles of 100, 200, 500, and 1,000 cubic centimeters. These filled bottles are then to be sealed officially and to be kept in a dark, cool place.

Ten kilograms of phenol phthalein and 93 liters of alcohol (wood spirits) give almost exactly 100 liters of solution.

One hundred centimeters of this solution then contains 10 grams of phenol phthalein, and are just sufficient for the blending of 5 hectoliters of spirits. (Exch. decree of August 3, 1889.)

With regard to the preparation of the phenol phthalein solution by the exchequer decrees of August 28 and September 14, 1889, the following has been published:

One kilogram of phenol phthalein of the quality demanded in the appendix to the exchequer decree of August 15, 1889 (Appendix *f* of this collection), must unconditionally dissolve without residue in 9.3 liters of spirits of 90 to 95 volume per cents of alcoholic strength (woods spirits), since the dissolving strength of alcohol or of wood spirits for phenol phthalein is much greater than that here demanded. Therefore, care is to be taken that the phenol phthalein supplied be examined in regard to the presence of all the qualities required in the appendix mentioned, and that phenol phthalein which does not completely possess those qualities be not used for the preparation of the solution prescribed as a methylene.

It is true the preparation of the solution sometimes requires a longer time because the phenol phthalein generally dissolves easily, but notwithstanding that, sometimes slowly. By application of spirits of the highest degree possible, as also by industrious stirring, and by the eventual placing of the mixture of spirits (wood spirits) and phenol phthalein into a water bath previously moderately warmed, the dissolution may be essentially accelerated. Furthermore, it is still recommendable, under continuous stirring (to prevent the conglomerating of the powder in the fluid), to drop the powdery phenol phthalein slowly and in portions into the spirits (wood spirits)

For the preparation of the solution of phenol phthaleïn now prescribed, those wood spirits are best adapted which are used for methylation with the common methylene. A special examination of such wood spirits is not necessary, provided the same show 90 to 95 per cent volume on the alcoholometer.

The solutions of phenol phthaleïn in spirits in existence at the date of the exchequer decree of April 5, 1890, may further be used; also the spirits already procured from the authorities for the preparation of the solutions may be used up. (Exch. decree of April 5, 1890.)

The phenol phthaleïn has the quality that it easily dissolves in alcohol, concentrated, as also diluted, without changing the color of the latter, but that the spirits blended with the same directly take a vivid and intensely red color as soon as natron lye is admixed with them. The coloration thereby effected is such an abundant one that the same remains distinctly noticeable even in a rarefaction of 1:10,000,000.

Through the addition of phenol phthaleïn, therefore, the controlling officials are put in the position, in a simple manner, at all times to prove whether potable spirits have been manufactured from spirits which have been methylated for the common commerce, or are blended or not blended with such spirits.[1] (Exchequer decree of August 15, 1889.)

Concerning the procurement of wood spirits and pyridine bases in a condition already officially examined, Paragraph II of the exchequer decree of August 15, 1889, contains the following provisions:

1. Persons who have obtained permission for the methylation of spirits free of duty by the usual methylene, may procure wood spirits and pyridine bases in a condition already officially examined. For that purpose, to manufacturers who produce or refine wood spirits or pyridine bases, as also to firms who trade therein, in the measure of their supply, permission[2] is granted to have those two products, with regard to the reglementary quality for methylation, subjected to the prescribed examination, so that they may dispose of them in their approved condition, under exclusion of every intermediate trade, to those persons who are allowed to perform the methylation of spirits free of duty.

---

and to wait with an addition of a new portion until the former has dissolved either totally or almost totally. (Exch. decree of August 28 and September 14, 1889.)

A phenol phthalein may be designed as completely suitable for the purposes of methylation in the sense of Appendix *f*, then, only when it dissolves at the usual temperature in the quantity of alcohol (or now of wood spirits) prescribed. The warming at the preparation of the solution, recommended in the decree of September 14, 1889, is therefore admissible solely when a phenol phthalein is the subject, of which the examination in the sense of point 2, of the Appendix *f*, has already shown that the same dissolves clearly in the quantity of alcohol (or wood spirits) prescribed.

The warming at the preparation, then, has only the meaning of an acceleration of the dissolution, without, however, being the condition for the same. If, on the contrary, a phenol phthalein should be used, which at the examination has not shown the quality mentioned, then the same will afterwards segregate again for a larger or smaller part from the solution prepared under warming when cooling off, or in the case of a longer standing still in the temperature of the room. (Exch. decree of April 5, 1890, I. 11594.)

[1] With relation to the examination of spirits with regard to the phenol phthaleïn, a special instruction, destined merely for the officials, has been published with the exchequer decree of August 3, 1889; as an explanation of this instruction, the exchequer decree of November 14, 1889, relating to the examination of acid and neutral fluids containing phenol phthaleïn, is to be considered.

Besides this, the red coloration effected by the addition of natron lye to methylated spirits may also be used in order to establish whether or not, perhaps, spirits already methylated by the usual methylene are presented for methylation. (Exchequer decree of April 5, 1890.)

[2] This permission may also refer to wood spirits or pyridine bases only.

2. The permission, upon request, is granted by the financial ministry, under reservation of being recalled at any time, to such makers of the kind mentioned[1] as enjoy the confidence of the financial administration and are not involved in bankruptcy or have not been punished for clandestine trade or any aggravated revenue transgression. Every abuse of any kind of the permission has for its consequence the immediate cancellation of the license. In the permission there will also be provided whether any and what amount of indemnification the proprietor is obliged to pay for the costs accruing to the exchequer from the supervision by the revenue office.

3. For the storage of those quantities of pyridine bases and wood spirits which are destined for the methylation of spirits solely, from the moment at which the specimens thereof have been taken for the examination with regard to the reglementary quality until their sale or removal, such buildings and closed rooms may be used as have been recognized as suitable for this purpose by the financial board of the first instance and in which those products may be stored completely isolated from other goods. Such rooms must be completely secured in which the storing is done until the completion of the transfusion of the approved methylene into the consignment vessels. (8 lit. *c* and *f* of this decree.)

4. To the petition for the above-mentioned permission, which has to be filed with the financial board of the first instance, is to be annexed an accurate description of the storage rooms and their connections outside, together with a sketch of the same. In the petition there is further to be stated the approximate extent of the yearly sale of approved methylenes (wood spirits and pyridine bases), as also the name of the petitioner, who will have to give answer and information to the financial officials at their stations. Every change made in the storage rooms is subject to previous application and approbation.

5. The financial board of the first instance causes the institution of an examination of the rooms for storage, the result of which is to be placed in a record kept in duplicate.

One copy of this record, provided with the official approval, is returned to the proprietor, while the second copy remains in the hands of the financial board.

The manufacturer must furnish the implements necessary for examination purposes, particularly a pair of scales, offically gauged, and a measuring vessel of proper quality and officially gauged.

The proprietor is furthermore obliged to keep a separate account of the sale of approved methylenes (wood spirits and pyridine bases), by which, especially the quantity of methylenes sold, the number of the relative certificates (8 lit. *g*) and the names of the purchasers must be evidenced.

6. At revisions and investigations the proprietor is obliged to supply the financial officials with any information and reference which is necessary for a thorough examination, and to render them, on their request, either himself or through his servants, all necessary assistance.

7. The proprietor's stock of methylenes (wood spirits and pyridine bases) already examined and declared as reglementary, as also such as have been sampled for the sake of examination, or have not yet been declared as reglementary and which are still to be sampled, shall, in the aggregate, not exceed the authorized supply for a sale of three months.

[1] The permissions granted are published in the Gazette of Ordinances of the financial ministry.

8. Relating to the taking of specimens and consignment of methylenes (wood spirits, pyridine bases) the following is directed:

(*a*) The taking of specimens must be done by two financial officials of the kind and in the manner prescribed in Section III, lit. A, l. 4, of the regulations for spirits destined for use free of duty. (P. 360 of the collection.)

If the methylene to be sampled is distributed in several vessels, then from each single vessel, after its contents have been well mixed, a separate specimen must be taken and sent in for examination.

If, however, a specimen in common from several vessels is preferred, then the contents of the latter are to be brought into a common reservoir, therein thoroughly to be mixed, and from this mixture the specimen is to be taken.

It is not allowed to mix with each other the specimens taken from single vessels and to take therefrom a common specimen. The largest quantity for which a specimen is admissible is fixed at 25 hectoliters.

The two little sample bottles are to be rinsed with the methylene to be examined before they are used, and to be provided with detachable labels, and upon the latter the name of the consignor, the date of the sampling, and the quantity of weight of the methylene sampled are to be made discernible, and the little bottle is to be sent to the station (place) of examination; also, the cover is to be placed under official seal, and at the same time the station of examination is to be advised.

(*b*) The vessels in which the methylenes are found, as also the rooms in which the same are kept, must, immediately after the sampling has been done, be placed under secure official fastening and remain under the same until the methylenes have been declared reglementary and are transfused into the consignment vessels and the latter are officially closed (lit. *c* and *f*), or till the methylenes, in consequence of the circumstance that they have not been declared reglementary, or for any other reason, are rejected for methylation of spirits.

(*c*) For the examination of specimens taken at the seller's, the agricultural chemical trial station in Vienna is exclusively authorized.

(*d*) As soon as the finding of the examination has arrived the proprietor must make report thereof to the relative control officers in order that the same either effect the discharge of the methylenes from the official fastening (lit. *b*) to which the finding of the examination refers, or supervise the transfusion into the consignment vessels, in accordance with the denial or the acknowledgment by this finding of the reglementary quality for methylation. This official function is to be performed by two financial officials.

(*e*) The consignment vessels must be manufactured of glass or clay, be provided with a bottle neck, and adapted for the application of the prescribed official fastening.

For this purpose the bottle neck must be somewhat narrower in the lower part in the clear, in order to prevent the cork from falling into the bottle. Furthermore, there must be found close to the rim of the bottle neck a roll at least 1½ centimeters high and proportionately broad; the fastening cork may project over the rim of the neck of the vessel 1 centimeter at the highest.

(*f*) The application of the fastening itself has to be done in such manner that a piece of parchment paper 15 centimeters square moistened by water and a rag of not too strong unpatched linen are placed over the cork and immediately under the roll of the bottle and then contracted and fastened by a wire cord drawn through the linen.

This cord, which at the most may be tied twice around the neck of

the retaining vessel, tightly contracted, is to be placed on the neck of the vessel as near as possible to the lead seal.[1]

The name of the party, number and date of the certificate, the finding of the examination made by the agricultural chemical trial station, the quantity and kind of the methylene, and the signatures of the officiating financial officials are to be written by means of the usual black gallnut ink upon the parchment paper destined for the fastening, which is to be well dried before it is moistened.

(*g*) Of each single vessel destined for consignment the two financial officials making the transfusion on the basis of the finding of the agricultural chemical trial station at Vienna must prepare a certificate from the register to be separately kept for each proprietor according to the sample annexed, by which certificate must be evidenced—

α. The name of the party who causes the methylene to be examined.

β. The kind of the methylene.

γ. Number and date of the finding of the agricultural chemical trial station at Vienna.

δ. The quantity of the methylene contained in the vessel.

ε. The gross weight and the signature of the consignment vessel already officially fastened.

ζ. The date of the issue of the certificate, together with the signatures of the officiating financial officials.

(*h*) As far as the application of the methylene already examined at the seller's for methylation is concerned, the financial officials charged with the surveillance over the latter must first convince themselves of the inviolate condition of the official fastening of the consignment vessels, then of the conformity of the certificate with the signature of the vessel, and in case there result no objection, then after the opening of the official fastening they must compare the contents of the parchment paper with the certificate.

In the case of an objection a reexamination of the methylene is to be instituted. Such reexamination of the already examined supply of wood spirits and pyridine bases must take place from time to time even without special occasion.

If the methylene covered by the certificate is merely partly used, then the same before being used is properly to be mixed and the residue is again to be placed under official fastening and to be kept under official joint lock.

After the relative methylene has been used the certificate is to be withdrawn.[2] (Exchequer decree of August 15, 1889.)

7. The methylation process is done in the manner subscribed under Section II of these regulations, and thereby special attention is to be had that the two methylenes are first poured into the methylation tub, then the corresponding quantity of alcohol or spirits in which the same is to be contained and let in and the mixture properly stirred.

---

[1]The application of the lead fastening has to be performed by the improved patent lead press of more recent construction (patent "Rast, Gasser, Zwanziger"), the stamp surface of which contains the engravings prescribed above. (Exchequer decree of August 3, 1889.)

[2]The certificates withdrawn are semiannually to be sent to the financial board of the first instance in the official district in which the seller has his depot, in order that the same may be promiscuously compared by juxtaposition with the entries in the certificate register. This comparison is regularly to be performed by the relative financial board.

The finding of the agricultural chemical trial station in Vienna is to be annexed to the certificate register, and the latter, together with the finding, has to be semiannually sent to the financial board of the first instance. (Exchequer decree of October 6, 1888.)

In accordance with the exchequer decree of August 15, 1889, the admixture of the phenol phthaleïn solution to the spirits to be methylated has to be done either before or after the addition of the wood spirits and the pyridine bases by simply pouring in the proportionate quantity and by thorough stirring of the spirits blended with it.

If only a part of the solution contained in the bottle has been used for methylation, then the bottle is directly to be again officially closed and to be kept under official joint lock in a cool and dark place. (Exch. decree of August 15, 1889.)

8. The methylated spirits are to be stored in a locality completely separated from the other trades plant, in which locality no other merchandise is found.

In the premises having a direct connection with that locality at least no unmethylated spirits must be stored.[1]

9. Of the disposition of spirits methylated by the usual methylene, those for whom the methylation was performed must keep a corresponding sales register officially prepared, on the first page of which the quantities of alcohol methylated from time to time are to be entered as debit.

These sales registers are to be prepared and kept according to the annexed sample, and from them the sales tickets are to be issued to the purchasers. The sales registers are semiannually, on January 1 and July 1, to be sent to the financial board of the first instance.[2]

The printed matter for the same, in paged and paragraphed pamphlets, the thread of which lies under official seal, may be procured from the office or official, to be designated by the financial board of the first instance upon payment of the costs for their preparation, and the office or official before issuing them must enter upon each pamphlet the name and residence and conscription number of the house of him for whom the register is procured.

In accordance with the exchequer decree of September 26, 1888, the officially prepared sales register according to Appendix *h* is to be kept not merely by those for whom the methylation of spirits by the usual methylation has been performed, but also by those who dispose of the spirits methylated to persons who sell the same directly to the consumers; and sales tickets[3] from the same must be issued by them to the designated persons as a certificate for the quantities of methylated spirits disposed of.

10. At least twice in a year the official taking of stock[4] of the supply in spirits, methylated by the usual methylene, must be performed. Before the taking of stock the receipt register and the sales register are to be closed and the supply which should be on hand to be ascertained. (Appendix D, l. 10, of the Execut. Ordin.)

---

[1] The provision under clause 8 is applicable upon those persons only who procure the spirits free of duty for methylation with the usual methylene. (Exchequer decree of October 6, 1888.)

[2] Also the sales registers to be kept by the commission merchants, i. e., those persons who procure methylated spirits from the methylater to dispose of to persons who sell the same directly to consumers, in accordance with the decree of September 28, 1888, have to be sent at the designated terms to the financial board of the first instance. (Exchequer decree of March 15, 1887.)

[3] The issuing of sales tickets, however, must take place merely for the quantities of methylated spirits delivered to the commissioners (but not for those delivered to the consumers). (Exch. decrees of March 15, 1889, and of May 3, 1889.)

[4] This taking of stock has to take place merely with those persons for whom the methylation by the usual methylene has been performed, and not likewise with commissioners. (Exch. decree of March 15, 1889.)

If a discrepancy[1] between the actual and the correct stock of spirits, methylated by the usual methylene is found, the institution of penal proceedings may then be omitted when the discrepancy does not exceed 5 per cent of the quantity of methylated spirits on hand at the last taking of stock, together with that methylated since such taking of stock. The financial officials are instructed to make evident the remaining supply of methylated spirits ascertained at each taking of stock in the sales register to be kept by the party. (Exch. decree of March 6, 1890.)

B. Special Methylenes.

1. Trades people may be allowed to perform the methylation of spirits for use in their own trade instead of by the usual methylene, by pyridine bases of the quality prescribed in Appendix I in the proportion of one-half liter to each 100 liters of alcohol or by 5 per cent of wood spirits of the quality prescribed in Appendix I. With regard to the conditions under which these methylenes may be admitted, the prescriptions relating to the examination of methylenes (Section III, A, points 3–8) find a proper application.

2. Vinegar manufacturers recorded with the commercial court may, for the manufacture of vinegar, methylate spirits by the above designated addition of pyridine bases or by 100 per cent of water and 100 per cent of vinegar containing 6 per cent of acetic acid, or by 100 per cent of water and 50 per cent of vinegar containing 12 per cent of acetic acid, whereby, on request of the mover, the quantity of added vinegar exceeding the prescribed measure, as also the quantity of water contained in the spirits presented, may be put into the amount of the quantity of water to be admixed.[2] In the place of water also beer or yeast water may be used. For the manufacture of vinegar, spirits may also be methylated by 200 per cent of vinegar with a 3 per cent content of acetic acid, or by 30 per cent of vinegar with a 6 per cent content of acetic acid, 70 per cent of water and 100 per cent of beer. Furthermore they may be allowed to admix, instead of water, beer, or yeast water, 100 per cent of pure natural wine along with the prescribed quantity of vinegar for the purpose of methylation.[3]

Vinegar manufacturers are permitted to have methylated spirits of a

---

[1] The penal sanction against such discrepancies is contained in sections 389 and 391 of the revenue penal code.

[2] The direction in question is to be understood in the sense that the spirits procured free of duty for the production of vinegar must be blended, regardless of its contents of alcohol, with just as many parts of space of water and 6 per cent vinegar as itself occupies of space; thus each hectoliter of spirits, without regard to its content of alcohol, with 1 hectoliter of water, and 1 hectoliter of 6 per cent or 50 liters of 12 per cent acetic acid, whereby, indeed, with regard to the water, the quantity of water contained in the spirits may be put into account. (Exch. decree of August 23, 1889.)

[3] In order to prevent vinegar manufacturers with fraudulent intent from methylating in whole or in part by sulphuric acid (which admits of being again segregated from spirits) instead of by acetic acid, the financial officers must convince themselves that the acetic acid destined for methylation does not contain sulphuric acid, and must not admit for methylation acetic acid which fails to sustain an examination had with this regard.

This examination is to be made in such manner that in the middle of a white china bowl or a small plate or saucer some pieces of common white sugar of the size of a millet corn be placed and soaked with about 20 to 30 drops of the acetic acid to be examined. Thereupon the cup is placed upon a pot of boiling water and left thereon till the vinegar has evaporated.

If there was no sulphuric acid contained in the vinegar, then the sugar and the

less strength than 80 per cent of the centigrade alcoholometer, and to a minimum of 35 per cent.

A distilling apparatus must not be kept in the building in which the manufacturing of vinegar takes place, nor in an adjoining room.[1]

For the performance of the methylation there must be present in the trades rooms of the manufacturer a permanent vessel, measured in wet manner by the revenue office, and provided with an appliance for reading off the height of the fluid. The examination of the vinegar used for the methylation of the spirits is made in accordance with the annexed instruction by the district leader of the financial guard-control. The means for the examination are supplied by the financial board, against reimbursement of the costs.

3. Until further directions, there may also, in addition, be allowed as methylenes for the spirits to be used:

For the manufacture of—

(*a*) Lacquers of every kind and of polishes, whether to be consumed in their own factory plants or for sale, one-half of 1 per cent of turpentine oil. For the manufacture of brewing glazure (varnish) the methylation, by a solution of one part of weight of shellac and two parts of weight of alcohol of 95 per cent, may be admitted, which solution is to be added to the spirits in the proportion of 20 per cent.

(*b*) Fulminate of mercury, one-half of 1 per cent of turpentine oil and 0.025 per cent of animal oil.

(*c*) Aniline colors, 0.025 of animal oil.

(*d*) It may furthermore be allowed to have spirits methylated:

α For the manufacture of the chemicals subsequently named, of the alkaloids, of the extractive stuffs used as medicines, as galbanum resin, scammony, chloroform, iodoform, ethyl vinous acid, chloral hydrate, sulphuric ether,[2] acetic ether for technical purposes (compare lit. δ), collodion, tannin, salicylic acid and salicylic-acid salts, white lead and acetate or sugar of lead, by one-half of 1 per cent of turpentine oil, or by 0.025 animal oil or by 10 per cent of sulphuric ether.

β. For the manufacture of color lacquers by one-half of 1 per cent of turpentine oil, or 0.025 per cent of mineral oil.

γ. For the examination of sugar beets with regard to the contents of sugar in sugar manufactories by 0.025 of animal oil.

δ. For the manufacture of vinegar ether[3] which is destined for technical purposes, exemption from tax for the spirits to be used may be granted merely upon the condition that besides the reglementary methylation of the spirits at the production (point *d*, lit. α), a supervision of the application of the vinegar ether produced for technical purposes also occurs.

---

cup will remain white, or at the most take a faintly yellow coloring, but if sulphuric acid was present, then the sugar will take a black coloring, or the spot which the sugar had occupied will grow black.

Pure vinegar evaporated without the addition of sugar may leave merely an insignificant residue. (Exch. decree of August 23, 1889.)

[1] Accordingly, also, the manufacture of vinegar from spirits procured free of duty in a distillery subject to the production tax is inadmissible. (Exch. decree of September 15, 1888.)

[2] In factories which produce compound kinds of ether (fruit ether) from spirits on which tax has been paid and at the same time have received permission to use, free of duty, spirits for the preparation of sulphuric ether or chloroform, the control has to be exercised with special care in order to prevent an illicit use of the spirits procured free of duty. (Exch. decree of January 1, 1890.)

[3] Relative to the articles mentioned in section III, B, under clause 3; see the relative Appendix K.

The manufacturers of vinegar ether for technical purposes are therefore obliged to keep a sales register of the sale of vinegar ether produced from methylated spirits in the same manner as the wholesale traders do with methylated spirits (section III, A, point *g*), and the same are prohibited from disposing of such vinegar ether to persons other than those who apply the vinegar ether merely for technical purposes, thus especially to retail sellers.

Those persons who procure vinegar ether manufactured from spirits free of duty for technical purposes are subjected to supervision by the revenue office.[1]

By the exchequer decree of October 21, 1888, it was further permitted that the spirits destined for the manufacture of glycerine soap may be methylated by castor-oil soap completely free of water, and that in the proportion of at least 5 kilograms to 100 liters of alcohol. The spirits destined for the manufacture of glycerine soap must have an alcoholic content of at least 90° of the centigrade alcoholometer, and the ricinus oil soap destined for the methylation must be freshly prepared and applied at each separate act of methylation, in the presence of the financial officials, in the following manner:

Upon each 100 hectoliter degrees of the spirits to be methylated 5 kilograms of castor oil are heated in a suitable vessel (duplicate cauldron) up to 90° to 100° Celsius. Thereupon 2¼–2½ kilograms of natron lye of 38° Beaumé (ordinary soap boilers' lye) are slowly added by stirring, to the oil named.

Following immediately after the saponification the mass is cooled down to 50–60° Celsius by removing the kettle from the fire or by shutting off the steam. After cooling down the soap thus obtained is blended by stirring with spirits of at least 90°, in the proportion of at least 5 liters to the quantity of soap necessary for the methylation of each 100 hectoliter degrees of alcohol, whereby the soap loosens itself easily and clearly.

The solution thus obtained, as long as it is still warm, is poured by stirring into the spirits to be methylated. Castor oil alone must not be used for methylation. (Exch. decree of October 21, 1888.)

Finally, by the exchequer decree of December 14, 1888, it was permitted that the spirits destined for the manufacture of hats may be methylated also by one-half of 1 per cent of turpentine oil of the quality prescribed in Appendix 1 sub II.[2]

---

[1] The control over the use of vinegar ether manufactured from spirits free of duty and destined for technical purposes is to be exercised with peculiar attention, since danger is impending lest the vinegar ether may be applied to perfumes or to purposes of beverage instead of to technical purposes. For the sake of the exercise of this control, it is commendable that the party who carries on the manufacture of vinegar ether from spirits free of duty be obligated not merely to the keeping of the prescribed sales register, but also to making report of the sale of each consignment of vinegar ether under statement of the net weight of the consignment and of the address of the recipient of the same. This report, after being compared with the dates of the sales register, is to be sent by the relative financial official to that district leader of the financial controlling guard in the district in which the consignee (recipient) of the vinegar ether subjected to the control of the revenue office finds himself. Upon that financial official it is incumbent to control the use of the vinegar ether exclusively to technical purposes. To make such a control possible it might furthermore (especially when vinegar ether manufactured from spirits free of duty is procured in greater qualities), be judicious to charge the consignee with the keeping of an application register to be inspected by a financial official. (Exch. decree of January 1, 1890.)

[2] By the exchequer decree of July 21, 1889, a representation of those branches of manufacture in which alcohol is made use of has been issued to the officials.

4. Animal oil, turpentine oil, sulphuric ether, and shell-lac solution, which are to be used as methylenes, must comply with the requirements resulting from the annexed instruction for examination.

5. The procurement of the several methylenes is left with the tradesmen.

If there is prescribed in these regulations a special examination for the relative methylene, then such a methylene must not be made use of before the examination by experts. With wood spirits and pyridine bases the examination has always to be made by sample taken in the manner prescribed under Paragraph III A of this supplement.

With the rest of the methylenes, however, the examination by experts may be applied for by the seller of those methylenes and be granted by the financial board. The costs are to be paid by the seller.

The experts must execute a certificate for the examination made in which the methylene examined, as also the vessel in which it is contained, are accurately to be designated.

The vessel directly after the examination must be placed under official lock and remain under official lock till the methylene is completely used up.

Before the performance of the methylation, the financial officials must convince themselves of the inviolate state of the lock of the vessel containing the methylene and of the conformity with the certificate to be filed. The portion of the methylene eventually not used is again to be placed under official lock.

6. The tradesmen in their relative petitions have also to state the manner of application of the spirits to be methylated in their trades, and the methylation may be performed solely for the purposes stated and within the shops of the tradesmen.

The disposal of spirits methylated in that manner to others is prohibited.

In the petition is further to be stated what quantity of methylated spirits is necessary for the production of a definite quantity of the manufactured goods.

In order to verify the correctness of these statements the financial board must solicit the opinion of the chamber of commerce and trade, and publish after the hearing of the latter the proportion fixed between the methylated spirits and the actual manufacture, in the reply to the petition, for the benefit of the party as well as for that of the supervising official.

7. The report and performance of the methylation itself is made in the manner prescribed under Paragraph II of these regulations, provided no special directions from time to time have been given.

8. With reference to the payment of the control fee the provisions contained in Section II, l. 4, of this supplement will control.

9. Tradesmen, methylating with a methylene other than the ordinary one, must keep a record of the increase and decrease of methylated spirits always ready for inspection, from which there must be evident—

(*a*) The total quantity and the alcohol contents of the methylated spirits.

(*b*) The quantity of the methylated spirits taken out of the supply into industrial use from time to time.

(*c*) The results of the manufacture (the product) with regard to the quantity of methylated spirits used.

Besides this they have to keep a special record of the sale of industrial products for the information of the revenue office, which record must be shown at any time to the financial officials upon their request.

The financial officials must be permitted without any denial to make a comparison of this record with the trades and commerce books.

10. The spirits methylated with any special methylene have to be stored exclusively in the place reported.

11. Tradesmen who, besides the trade for which they make use of methylated spirits, carry on another trade in which spirits not subjected to the consumption tax are used (for instance, liqueur manufacturers) must keep the different establishments completely separated from each other. The same holds good of tradesmen who use in their manufacture spirits methylated partly with the ordinary methylene, and partly in another manner.

IV. *Special directions relating to spirits to be applied free of duty for medicinal and scientific purposes.*

Inasmuch as methylated spirits are not applicable for a medicinal or scientific purpose, the financial board of the land may, for an exception, allow the use free of duty of unmethylated spirits under the following special conditions and controlling measures:

1. Whosoever wishes to make a claim upon such exceptional privilege must file a petition with the financial board of the land, and state in this petition—

(*a*) The annual quantity of spirits required for the relative purpose.
(*b*) The use to which to be applied.
(*c*) The source of supply.
(*d*) The security to be given for the consumption tax.

Every use of the spirits other than that expressly stated in the petition is punishable.

2. The concession is granted to such persons only who authentically pursue scientific purposes,[1] and to apothecaries,[2] provided they do not carry on either a sale over the bar or a retail business in distilled spirituous liquors or a trade in these liquors.[3]

---

[1] In general it was declared by the exchequer decree of October 3, 1888, that the provisions of Section IV, provided they do not expressly speak of dispensaries, find also application upon the procurement of spirits free of duty for scientific purposes.

In particular it was provided by the exch. decree of October 25, 1889, that on part of those institutions and persons to whom the use of unmethylated spirits free of duty for scientific purposes had been granted, records are to be kept with regard to the procurement and application of those spirits. Those records must be shown for examination at the inspections in order that it may be ascertained whether the required state of the spirits procured free of duty is in conformity with the actual state.

The form of these records is to be fixed in each single case with respect to the circumstances of the same.

With reference to the duration of the concessions, the decree cited provides that they are to be granted solely for a definite time, and as the most convenient, for one year each. The quantity of spirits released must be confined strictly within the limits of the actually existing want.

The requirement of the security prescribed in Section I of these regulations, rule il. 6, can be dispensed with in Government institutions. (Ech. decree of October 25, 1889.)

[2] The proprietors of house dispensaries (physicians and surgeons in the open country) do not belong to the profession of apothecaries according to the existing prescriptions, and therefore have no claim upon the concession in question. (Exch. decree of April 28, 1889.)

[3] This provision has been explained by the exchequer decree of November 12, 1888, as follows:

"The apothecaries are authorized and respectively obligated, according to the provisions of the pharmacopœia, to carry a stock of ordinary spirits, of ordinary cognac or French brandy, of rum, and of liqueur, since those liquids may also be used for medicinal purposes. Hence because an apothecary has the distilled spirituous liquids named in stock, it may not be finally concluded that he carries on a sale over

3. The financial board of the land, before each granting of a concession for the use free of duty of unmethylated spirits, must convince themselves in proper manner of the correctness of the statements made in the petitions, and upon the basis of the ascertainments obtained fix the maximum annual quantity of alcohol which may be used free of duty.[1]

4. With regard to the procurement of spirits free of duty the provisions contained in Section I of these regulations prevail.[2]

5. The spirits procured are to be kept in gauged vessels at a designated place.[3]

If several containers filled with spirits are present, then one only may always be opened for the withdrawal of spirits.[3]

6. Those persons to whom the concession for use free of duty of unmethylated spirits has been exceptionally granted stand under the control of the revenue office[4] and are obligated to render or cause to

---

the bar, or retail sale or trade in the fluids mentioned, and that therefore the concession is to be denied to him.

"On the other hand it is to be observed that the apothecary, by virtue of his dispensary license, is solely authorized to dispense the distilled spirituous liquids above mentioned for medicinal use; that furthermore the dispensation of distilled spirituous beverages in a dispensary by virtue of section 11, Lit. B, of the law of June 23, 1881, Imperial Law Gazette No. 62, does not fall under the ruling of a sale over the bar or retail sale of those beverages subject to the special tax except when it occurs in the form of medicines ordered by a physician, and that those liquids are but rarely prescribed for medicinal purposes.

"This is to be taken into consideration at the soliciting of the opinion of the board of apothecaries or, where no such is in existence, of the other associations of apothecaries, eventually of governmental officials (district physicians) intrusted with the inspection of dispensaries, and at the granting of the concession in each single case.

"In the relative concessions is always expressly to be remarked that under the eventual loss of the concession and under expectation of punishment a sale over the bar and a retail sale of distilled spirituous liquors, as also a trade in them, must not take place. By frequent and proper observations the financial authorities must convince themselves of the keeping of this prohibition, respectively, that the dispensation of distilled spirituous beverages is performed solely in the form of medicines prescribed by a physician." (Exchequer decree of November 12, 1888.)

[1] For this fixation the evidencing of those quantities of alcohol is to be demanded that has been used for the purpose in question for the last two years. Also the opinion of the relative board of apothecaries may be solicited.

The financial boards of the land must watch strictly that the annual quantities allowed in no case exceed the actual want, since the concession of too large quantities would encourage a prohibited application of spirits procured free of duty (particularly the use of the same for the manufacture of rum, liqueur, French brandy, etc.). In those cases in which the presumption seems well founded that the annual quantity allowed exceeds the actual want, more recent ascertainments relating to the annual want are to be made and in accordance with the result of the same the quantity allowed is to be restricted. These ascertainments are certainly to be conducted with the greatest accuracy. If doubts should exist with regard to the quantity to be allowed, then it is recommendable to grant the concession but for a certain period, perhaps for one year. (Exchequer decree of June 17, 1889.)

[2] As a matter of course, the control fee of 1½ kreutzers per liter of alcohol is not to be paid for unmethylated spirits to be used free of duty for medicinal and scientific purposes. (Exchequer decree of May 7, 1889.)

[3] The accurate observation of these provisions was inculcated by the exchequer decree of December 6, 1889. The gauging is to be performed by the financial officials in the sense of exchequer decree of September 26, 1888.

[4] The political authorities by means of a decree of the ministry of the interior of October 8, 1888 (communicated to the financial board of the land by means of exchequer decree of October 17, 1888), were charged to invite all the apothecaries (or boards of apothecaries) as also the office physicians of their jurisdiction to familiarize themselves most accurately with the provisions of the spirits taxation law referring to the apothecaries; and, furthermore, said financial board was to direct the office physicians that they keep an eye upon these provisions when exercising the supervising function incumbent upon them with regard to the apothecaries, especially on the occasion of dispensary inspections.

be rendered the needed auxiliary labor at the inspections. The apothecaries, besides this, are bound to keep an accurate record of the receipt and the use of spirits procured free of duty, according to the form appended. The printed matter for these records is furnished in paged and paragraphed pamphlets subject to repayment of the costs for the same. The records are to be concluded quarterly and sent to the financial board of the first instance.[1]

7. It is strictly prohibited to use spirits procured free of duty for any purpose other than medicinal[2] or scientific, and particularly to dispose[3] of such spirits in an unchanged condition for purposes other than medicinal.[4]

Neither may the same be used[5] for the preparation of rum, cognac, cologne water, and essences. Every abuse is punishable.[6]

8. At the periodical inspections which are to be held tallies must be made. If a quantity of spirits larger than that proportionate to the average want (cls. 1 and 3) should come into use, then the causes are to be discovered; eventually the defraudation of the revenue is to be charged.

9. The financial board of the land may grant[7] the gross apportion-

---

[1] These records are to be examined by the financial board of the first instance invariably when sent in, with the view to determine whether the same have been kept in a reglementary and correct manner.

Thereupon the same must be taken into custody in order to be used as evidence in the examination of the circumstance as to whether the annual quantity of alcohol apportioned to an apothecary is proportionate to his wants. (Exchequer decree of June 18, 1889.)

For this latter reason, regard must be had that these records are kept with accuracy. (Exchequer decree of June 17, 1889.)

[2] For the preparation of waters for cleaning the mouth, provided the same are not prescribed by a physician in form of a recipe, these spirits must not be used; since waters for cleaning the mouth, as a rule, are to be considered as cosmetics. In general, the use of these spirits for the preparation of cosmetical, dietetical, tooth-cleaning, and disinfecting means, is unconditionally prohibited, since those are to be considered not as mere medicines, but also as articles salable outside of the dispensaries. For the manufacture of spirituous tinctures the spirits procured by the apothecaries free of duty may be used only when the same, beyond any doubt, are destined for medicinal use. (Exchequer decree of October 15, 1889.) Horse fluid can not be counted among the preparations considered as medicines, since its sale is by no means confined to the dispensaries. (Exchequer decree of January 5, 1890.)

[3] The sale of spirits procured by an apothecary free of duty to physicians for their domestic dispensaries is unconditionally inadmissible. Such spirits must be used by the apothecary himself for the medicinal purpose limited by the exemption from duty. (Exchequer decree of May 12, 1889.)

[4] In an unchanged condition, therefore, spirits may be dispensed by apothecaries solely for medicinal purposes, but not for scientific purposes.

[5] There is no objection made that apothecaries who have obtained the concession for the use free of duty of unmethylated spirits—be it under gross apportionment of the annual want, or under the obligation of bookkeeping—to their use of spirits on which the consumption tax has been paid for the preparation of the articles named above. (Exchequer decree of January 9, 1889.)

[6] Also this prohibition is to be inserted into the text of the relative concessions. By frequent controlling and proper observations and by inspection of the records of the apothecaries or of the laboratory books the financial officers must convince themselves of the observation of this prohibition. (Exchequer decrees of November 12, 1888, and of June 17, 1889.)

The penal provision relating to the violation of the prohibition is contained in section 94, cl. 1, of the law.

[7] This favor is matter of confidence and to be granted only when the experts employed for the opinion, be it the board of apothecaries or in crownlands, where no such exist, the other associations of apothecaries, eventually the governmental acting officials (district physicians) charged with the inspection of the dispensaries, recommend the gross apportionment after the most accurate examination of the proofs relating to the requisite supply of alcohol. (Exchequer decree of October 17, 1888; decree of the ministry of the interior of October 8, 1888.

ment of the annual want of spirits for medicinal purposes to those apothecaries who by means of the laboratory book prove their average use of alcohol[1] for medicinal purposes for the last two solar years. But no alcohol is taken into the account which has been used for the preparation of the fluids designated in point 7, cl. 2; on the other hand, the annual gross apportionment thus ascertained is increased by 3 per cent for the alcohol used for medicines and taken from the so-called stand glass.[2]

When the gross apportionment petitioned for is granted, then the obligation for bookkeeping (cl. 6) is dispensed with.

APPENDIX *b* TO SUPPLEMENT III.

[Form *b* to Appendix E.]

Crownland ———. Financial district ———.
Revenue district ———.

REPORT.

The undersigned proprietor of the ———, in ——— conscript No. ——, reports to the T. R. ——— office in ——— that in his business ———, (in words) ——— hectoliter degrees (liters) of pure alcohol from the ——— of the ——— in ——— conscript No. —— for the sake of use free of duty for (purpose) ——— has arrived and pays the control fee due thereon per ——— florins and ——— kreutzers, (in words) ——— florins and ——— kreutzers of Austrian valuation.

——— on the ———, 18——.

N. N.,
———.

On the part of the undersigned financial official it is confirmed that the above-named quantity of alcohol has been entered under the receipt register item No. ——.

On the ———, 18——.

——— on the ———, 18——.

———,
Financial Official.

---

[1] It does not suffice when the average consumption is proved with those articles for the production of which spirits are used.

[2] The quantities of alcohol regained by the way of distillation which are suitable for a new application are to be taken into account in order to ascertain the quantity of wine spirits actually procured from outside. (Decree of the ministry of the interior of October 8, 1888.)

On the granting of the gross apportionment particular attention must be paid that the quantity allowed does not exceed the requisite quantity. For this purpose the relative financial board of the land must not confine themselves to the solicitation of the opinion of experts, but must make ascertainments of the extent of the alcohol consumption by the relative apothecary through their own officials or in any other proper manner. (Exchequer decree of October 17, 1888, and of June 17, 1889.)

APPENDIX *a* TO SUPPLEMENT III.

[Form *a* to Supplement E of the executive ordinance.]

Crownland ———. Financial district ———.
Revenue district ———.

Report of the undersigned proprietor of the ——— in ——— conscr. No. ———, relating to the intended methylation of the spirits received on the ———, 18—, for use free of duty and standing under bond for the consumption tax.

Performance of the act of methylation.		Spirits to be methylated.			Methylene applied.				Designation, number, and capacity of the methylation vessel.	Remarks.
		At the temperature of +12° Réaumur.								
Day.	Hour.	Quantity in liters.	Alcoholic content according to the centigrade alcoholometer scale.	Hectoliter degrees (liters) of pure alcohol.	Kind.	Kilograms.	Liters.	Statement whether the same has been subjected to the reglementary examination, and of the eventual confirmation thereof.		

——— on the ———, 18———.

DISCHARGE.

1. Delivered on the ———, 18—.
2. The preceding report relates to the consignment of spirits received for use free of duty under item No. — of the receipt register by ——— in ———, on the ———, 18—.
3. Result of the official examination of the spirits with regard to—
(*a*) The condition ———.
(*b*) The quantity according to the gauge mark ———.
(*c*) The quantity according to the weight ———.
(*d*) The alcohol content and the temperature ———.
(*e*) The reduction of the apparent strength upon the true strength (Table I) ———.
(*f*) The reduction upon the true volume (Table II) ———.
(*g*) The reduction of the net weight upon the volume (Table III) ———.
(*h*) The hectoliter degrees (liters) of pure alcohol contained ———.
4. Confirmation and description of the performed act of methylation ———.
5. Total quantity of the methylated spirits and their eventual further booking ———.

——— on the ———, 18—.

Item No. —— on the ——, 18—.	Hectoliter degrees (liters) of pure alcohol.	Accruing control fee.	
		Florins.	Kreutzers.
—— in —— conscr. No.—— has, according to the annexed report of date of the ——, 18—, in cash, paid to-day to this office the accruing control fee of —— florins and —— kreutzers, (in words).....			
—— florins and —— kreutzers (according to the rate of 1½ kreutzers per hectoliter degree) due for the —— procured....			
Free of duty from the —— of the —— —— in —— conscr. No. ——, according to receipt-register item No. —— of the ——, 18—, for the sake of use free of duty for (purpose) —— (in words) —— hectoliter degrees (liters) of pure alcohol.....			

(Coat of arms.)

Crownland ——. T. R. —— office ——.

Ticket No. ——, issued on the ——, 18—, at —— o'clock a. m. or p. m., by virtue of the report of date of ——, 18—.

—— in —— conscr. No. ——, has paid in cash to this office —— florins and —— kreutzers (in words) —— florins and —— kreutzers, Austrian value, as the control fee (at the rate of 1½ kreutzers per hectoliter degree) due for the ——, procured free of duty from the —— of the ——, in ——, conscr. No. ——, according to receipt-register item No. ——, of the ——, 18—, for the sake of use free of duty for (purpose) ——, (in words) —— hectoliter degrees (liters) of pure alcohol.

Amount of the control fees.	
Florins.	Kreutzers.

T. R. ——, office in ——.

——, ——,
Comptroller.

——, ——,
Receiver.

This ticket was used for the covering of the following methylation act subject to control fee:

For the repairs of—	Subjected to methylation.		Control fee.		Signature of the financial official.	Remarks.
	On the—	Hectoliter degrees (liters) of pure alcohol.	Accruing.	Remains, balance of.		
			Fl. Kr.	*Fl. Kr.*		

APPENDIX *d* TO SUPPLEMENT III.

[Appendix *d* to Supplement E of the executive ordinance.]

The quality of the component parts of the common methylene.

1. WOOD SPIRITS.

The wood spirits shall be colorless or faintly yellowish colored. The specific weight of the same must not exceed 0.840. On the distillation of 100 space parts of the wood spirits at least 90 space parts shall have gone over at the normal state of the barometer of 760 millimeters of mercury pressure to a temperature of 75° C. The wood spirits shall be mixable readily with water in any proportion. The acetone content of the wood spirits shall exceed 30 per cent. The wood spirits shall contain at least 1 per cent, but not more than 1.5 per cent of component parts of discoloring brome.

2. PYRIDINE BASES.

The mixture of pyridine bases shall be colorless or faintly yellowish colored. Its water content shall not exceed 10 per cent. At the distillation of 100 space parts of the mixture at least 90 space parts shall have gone over at the normal state of the barometer of 760 millimeters to a temperature of 140° C. The mixture shall be readily mixable with water in any proportion, and shall be free of ammoniac.

APPENDIX *e* TO SUPPLEMENT III.

[Appendix *e* to Supplement E of the Ex cutive Ordinance.]

Instruction for the examination of the wood spirits and of the pyridine bases.

I. WOOD SPIRITS.

1. *Color.*—The color of the wood spirits shall correspond with the type of color prescribed.[1]

For comparison with the color type the wood spirits are to be filled into the proof flask destined therefor, and the latter with its broad surface must be placed alongside of the color type on a sheet of white paper.

2. The specific gravity of the wood spirits must not exceed 0.84; that is to say, their strength, to be ascertained by a gauged centigrade alcoholometer, must not be less than 88 per cent after reduction to the normal temperature of 12° Réaumur.

3. *Boiling temperature.*—One hundred cubic centimeters of wood spirits are brought into a metallic alembic; upon the alembic a boiling tube provided with a ball is placed, which boiling tube is connected with a Liebig cooler by a lateral support. Through the upper opening a centigrade thermometer[2] officially endorsed is introduced, the mercury vessel of which reaches down below the support. Neither must the scale of the thermometer project too far beyond the steam space. The

[1] Each color type consists of a proof flask of a destined size and form and of two yellow glass plates, one of which serves as a reserve plate. These color types are to be procured from the economate (†) of the financial direction of the land at Vienna. (Exch. decree of August 13, 1888.)

[2] For examination of the wood spirits thermometers of − 1 to + 80° C. and with an accuracy limit of + 0.25° C. are required. These thermometers are to be procured from the economate of the financial direction of the land at Vienna. (Exchequer decree of March 2, 1889.)

alembic is heated so moderately that the transcended distillation runs down from the cooler in drops. The distillation is caught in a graded glass cylinder and, if the thermometer shows 75° at a normal stand of the barometer, at least 90 cubic centimeters should have transcended.

If the stand of the barometer deviates from the normal, then for each millimeter 1° should be brought into discount; thus, for instance, with 770 millimeters 90 cubic centimeters at 75.3°, with 750 millimeters at 74.7°, shall have transcended.

4. *Mixability with water.*—Twenty cubic centimeters of wood spirits shall give a clear or but faintly opalizing mixture with 40 cubic centimeters of water.

5. *Segregation by natron lye.*—At the thorough shaking of 20 cubic centimeters of wood spirits with 40 cubic centimeters of natron lye of 1.3 sp. gr., at least 5 cubic centimeters of wood spirits should be segregated after half an hour.[1]

6. *Capability for reception of brome.*—One hundred cubic centimeters of a solution of calcium bromate and calcium bromide, which are produced according to the instruction following below, are blended with 20 cubic centimeters of sulphuric acid diluted in the manner likewise indicated below. To this mixture, which represents a brome solution of 0.703 gram of brome, out of a burette, divided into 0.1 cubic centimeter, wood spirits are added by drops under constant stirring until a lasting discoloration occurs. For the discoloration not more than 30 cubic centimeters and not less than 20 cubic centimeters of wood spirits should be requisite.

The examinations of the capability for reception of brome are always to be held in full daylight.[2]

Instruction for the manufacture of the component parts of the bromine solution.

(*a*) *Bromine salts.*—After at least two hours' drying at 100° C. and cooling off in the exsiccator, 2.447 grams of calcium bromate and 8.719 grams of calcium bromide which before have been examined with regard to their purity are weighed off and dissolved in water. The solution is filled up to 1 liter.

(*b*) *Diluted sulphuric acid.*—One volume of concentrated sulphuric acid is mixed with three volumes of water. The mixture is allowed to grow cold.

---

[1] The proceeding shall be in the following manner: On the thorough shaking of the prescribed quantity of wood spirits and natron lye, a measuring cylinder holding 100 cubic centimeters, graded and closable with a cut-glass stopper, is to be used. The shaking itself has to be done in a horizontal direction and in a moderate manner for half a minute. (Exchequer decree of October 15, 1888.)

[2] In this regard the following proceeding is to be observed: The reglementary preparation of the mixture of the bromine salt solution with sulphuric acid is every time to be made twice, and every time in a little glass bottle with a cut stopper, holding about 200 cubic centimeters. To this mixture in the one little bottle 20 cubic centimeters of wood spirits are allowed to flow at once in one uninterrupted spray from the burette, divided into 0.1 cubic centimeter, while to the mixture in the second little bottle likewise 30 cubic centimeters of wood spirits are poured. The bromine solutions blended with wood spirits are then observed under repeated, moderate shaking. After the lapse of six minutes the bromine solution, blended with 23 cubic centimeters of wood spirits, must still appear of a distinct yellow color, yet that with the wood spirits addition of 30 cubic centimeters must appear already discolored. (Exchequer decree of October 15, 1888.)

Of the preceding directions passed to cl. 5 and 6, the manufacturers of wood spirits are to be notified. (Exchequer decree of October 15, 1888.)

II. Pyridine Bases.

1. Color similar to wood spirits.
2. Attitude toward cadmium chloride.

Ten cubic centimeters of a solution of 1 cubic centimeter of pyridine bases in 100 cubic centimeters of water are blended with 5 cubic centimeters of a 5 per cent watery solution of water-free molten cadmium chloride and forcibly shaken. Presently a distinct crystalline secretion shall occur. With 5 cubic centimeters of Nessler's reagent, 10 cubic centimeters of the same pyridine bases solution should give a white sediment.

3. *Boiling temperature.*—Proceed as with the wood spirits, and the distillation should amount to at least 90 cubic centimeters[1] when the thermometer has risen to 140°.

4. *Mixability with water.*—Similar to wood spirits.

5. *Water content.*—On the thorough shaking of 20 cubic centimeters of bases and 20 cubic centimeters of natron lye of 1.4 sp. gr., at least 18.5 cubic centimeters of the bases should be segregated after they have been left standing for a while.

6. *Titration of the bases.*—One cubic centimeter of pyridine bases dissolved in 10 cubic centimeters of water is blended with normal sulphuric acid till 1 drop of the mixture on congo paper creates a distinct blue rim. Not less than 10 cubic centimeters of the acid solution should be used to secure this reaction.

Appendix *f* to Supplement III.

[Supplement to the exchequer decree of August 15, 1889.]

Quality of the phenol phthaleïn.

Phenol phthaleïn suitable for methylation must answer to the following requirements:

1. Two-tenths to three-tenths of a gram of phenol phthaleïn must not leave any perceptible residue (absence of organic impurities) on combustion.

2. One gram of phenol phthaleïn must, when overcast with 10 cubic centimeters of alcohol of 90 per cent volume, respectively, and (with respect to the exch. decree of April 5, 1890, l. 11594) with 10 cubic centimeters of wood spirits, dissolve without any residue of organic additions not dissolvable in alcohol, like sugar, dextrine, etc., to a clear, yellow-brown colored fluid.

3. The capability of coloring must be the same as that of a pure mercantile phenol phthaleïn. For the examination with this view, 1 gram each of the phenol phthaleïn to be examined and of the normal phenol phthaleïn is dissolved, respectively, filled up to 500 cubic centimeters each of alcohol of 90 per cent volume. Each 5 cubic centimeters of these solutions thereupon are blended with 1 cubic centimeter normal lye, and then anew filled up to 100 cubic centimeters with alcohol of 90 per cent volume. These solutions now diluted in the proportion of 1 to 100,000, when observed in colorless parallel-sided glass vessels

[1] The thermometers to be used reach from − 4 to + 190° C. and have an accuracy limit of + 0.5° C. They are to be procured from the economate of the financial director of the land at Vienna. (Exchequer decree of March 2, 1889, l. 4494.)

(c. gr. in those glasses which serve for the examination of the color of the wood spirits) must show corresponding shades of colors, or but unessentially different ones.

APPENDIX *g* TO SUPPLEMENT III.

[Contained in the exchequer decree of August 15, 1889.]

Certificate register[1] *relating to the certificates concerning the examination of the wood spirits or pyridine bases, with regard to their prescribed quality, issued to the firm* ———, *in* ———, *by virtue of the concession of the T. R. ministry on finances of the* ———, *18*——, *l*——.

Item number of the certificate.	Day of the issuance of the certificate.		Finding of the agricultural trial station in Vienna.		Quantity in liters of the wood spirits, respectively, of the pyridine bases contained in the consignment vessel.
	Day and month.	Year.	Number.	Date of the issuance.	

[1] Printed matter to be strictly accounted for.

EXAMINATION CERTIFICATE.

Certificates issued.

——— Office.
Crownland. Financial board of first instance

[Cost of arms.]

EXAMINATION CERTIFICATE No. ——, ISSUED FOR ——— (NAME AND OCCUPATION) IN ———.

By the undersigned it is hereby confirmed that in the quantity of ——— liters of wood spirits or pyridine bases contained in the package ——— (statement of the signature), in the presence of officials, has been taken and transfused into the consignment vessel belonging to this certificate out of that supply which, according to the finding of the agricultural chemical trial station in Vienna of ———, No. ——, has been examined with regard to its prescribed quality and found suitable. The gross weight of the above-named consignment vessel was ascertained to be ——— kilograms.

Date ———. N. N.
Official seal. N. N.

APPENDIX *h* TO SUPPLEMENT III.

[Form *f* to Supplement E of the Executive ordinance.]

Crownland ——. Financial District, ——.
Revenue district, ——.

Sales register No. ——, of the —— of the —— in —— conscr. No. ——, relating to the sale of the stock, accounted for in the following, on spirits (also vinegar ether) methylated by the ordinary methylene, consisting of —— sheets with —— tickets for ——-, 18——.

Received.

According to point 5 of the discharge of the report—		Signature of the financial official.
Of the—	Quantity of methylated spirits (liters).	

Recapitulation of the dispensation from the register.

According to page No. —— of this register.	Quantity of the methylated spirits sold (liters).

Item number.	Date.	Recipient.			Quantity of the methylated spirits (liters).
		Name.	Station (occupation).	Residence and conscr. number.	

SALE TICKETS FOR METHYLATED SPIRITS.

Sale Ticket No. ——.

On the ——, 18—, at —— o'clock a. m. or p. m., were sold for ——, (name and station) —— in —— conscr. No. —— in wards ——, liters of methylated spirits.

[Signature.]
[Occupation.]

APPENDIX *i* TO SUPPLEMENT III.

[Appendix *g* to Supplement E.]

Instruction for the examination of vinegar admitted as methylene.

For the sake of the examination of vinegar with regard to its content of acetic acid a solution of 1 gram phenol phthalein, which the financial board furnishes, in 500 grams of spirits of at least 95 volume per cent alcohol is prepared, and a vinegar-trier officially accredited is procured.

The vinegar-trier is a cylindric glass tube, closed below with a pedestal and bearing several division marks. The lowest mark limits an inner volume of 20 cubic centimeters, above this mark 12 to 14 division

strokes numbered seriatim are found, each two of which neighboring one another include an inner volume of $1\frac{2}{3}$ cubic centimeters.

The vinegar-trier is filled with the vinegar to be examined to the lowest dividing mark. Add one (or two) drops of the phenol-phthalein solution and finally cautiously pour in binormal natron solution until the previously colorless fluid assumes a roseate coloration. If the level of the fluid lies above the dividing mark, designated with 3, 6, or 12, then the vinegar contains more than 3, 6, or 12 per cent of acetic acid.[1]

APPENDIX *k* TO SUPPLEMENT III.

Under aniline colors all dyeing materials artificially prepared from coal tar are understood.

Alkaloids are called by some carbonaceous combinations of a pronounced basic character, nitrogenous, and occurring in same plants, and to which the salubrious or the poisonous power of many plants is ascribed; hereto belong, e. g., the nicotine in the leaves of different sorts of tobacco, in the seed capsules of the poppy, the chinine, strychnine, solanine (the latter especially also present in potatoes that have germinated). Jalap resin and scammonium are officinal kinds of resins (that is to say, coming into use as medicaments), which are prepared from different exotic plants by extraction with alcohol, and exert a strongly purging effect. The color is ashy gray to dark brown.

Chloroform is a colorless fluid of a pleasant etheric smell and sweetish taste.

The inhaling of chloroform vapors calls forth unconsciousness; on account of this (anæsthetic) effect the chloroform finds application with painful operations. It is not combustible.

Iodoform appears in yellow, shining leaflets, is soluble in alcohol, insoluble in water, evaporates at the ordinary temperature, and has a smell similar to saffron. In medicine it plays a grand part as a so-called antiseptic (that is to say, against decay).

Chloralhydrate crystallizes in colorless needles, is soluble in water and in alcohol, melts at 46° and decomposes at 96° in chloral and water; the former is used for the production of chloroform.

Ethylvinous acid, vinegar ether, and sulphuric ether (common ether) are neutral (thus not working upon litmus paper), very volatile fluids, that are almost insoluble in water. They are very inflammable at the ordinary temperature, possess a pungent smell, and are produced by the effect of the relative acids (vinous acid, vinegar acid, sulphuric acid) upon alcohol.

Collodion is a solution of cotton which has been impregnated by a mixture of saltpeter acid and sulphuric acid in ether containing alcohol, and is a colorless, easily inflammable fluid. It finds application in medicine, but particularly in the photographic art.

---

[1] The means of proving for the examination of vinegar (phthalein, binormal natron solution and vinegar-trier) must be presented to the agricultural-chemical trial station for the sake of the issuance of a certificate before they are sent to the single leaders of the control districts of the financial guard.

The price (1) of a vinegar-trier inclusive of the examination certificate amounts to 1 florin and 80 kreutzers; (2) of a bottle with 1 liter of binormal natron solution inclusive of the examination certificate 1 florin and 20 kreutzers; (3) of a bottle with glass stopper and 100 grams of phthalein solution, together with certificate 42 kreutzers. At the returning for new filling for a bottle designated sub 2, together with a caoutchouc-stopper 30 kreutzers, and for a bottle mentioned sub 3, 14 kreutzers are refunded. (Exchequer decree of September 9, 1888.)

Tannin is a colorless, shining, amorphous mass, which is soluble in alcohol and water. It is the most efficient component part of the materials for tanning which find application in the tanning of hides, and is produced by extracting gallnuts with alcohol.

Salicylic acid occurs in colorless, needle-shaped crystals, dissolves in water with difficulty, and melts at 150°. It is strongly antiseptic, and finds application in medicine as well as in the preserving of food.

Of the salicylic-acid salts which are used in the same manner, salicylic acid natron is the most important.

Sugar of lead (acetate of lead) forms shining, colorless crystals, which disintegrate in the air, possesses a sweetish taste, is neutral, and is poisonous. Sugar of lead is prepared by dissolving litharge in vinegar, and is applied, among other uses, in the dyeing business.

White lead (basic lead carbonate) is one of the most important dyeing materials, and is extremely poisonous. It occurs in different sorts in commerce, but always represents itself as a white powder. It is chiefly produced from a solution of vinegar of lead through the introduction of carbonic acid. (Exchequer decree of August 10, 1888.)

APPENDIX *l* TO SUPPLEMENT III.

[Appendix A to Supplement E of the executive ordinance.]

Instruction for the examination of animal oil, turpentine oil, and ether.

I. ANIMAL OIL.

1. *Color.*—The color of animal oil should be black brown.

2. *Boiling temperature.*—If 100 cubic centimeters are distilled in the manner stated for wood spirits, not more than 5 cubic centimeters below 90°, to 180° at least 50 cubic centimeters shall transcend.

3. *Pyrrol reaction.*—Two and five-tenths cubic centimeters of a 1 per cent solution of animal oil are diluted to 100 cubic centimeters by alcohol. If you bring into 10 cubic centimeters of this solution, which contains 0.025 per cent of animal oil, a firwood chip, moistened with concentrated muriatic acid, then, after a few minutes, the same should show a distinct roseate coloration.

4. *Relation over against mercurial chloride.*—Five cubic centimeters of a 1 per cent solution of animal oil, when blended with 5 cubic centimeters of a 2 per cent alcoholic solution of mercurial chloride, should directly give a voluminous fleecy precipitation. Five cubic centimeters of a 0.025 per cent alcoholic solution of animal oil, blended with 5 cubic centimeters of the mercurial chloride solution, should directly show a distinct troubling.

II. TURPENTINE OIL.

1. *Specific gravity.*—The specific gravity of turpentine oil shall lie between 0.855 and 0.865 at 15°.

2. *Boiling temperature.*—If 100 cubic centimeters are distilled in the manner stated for wood spirits, then up to 150°; not more than 5 cubic centimeters, and up to 160°, at least 90 cubic centimeters shall transcend.

3. *Mixability with water.*—Twenty cubic centimeters of turpentine oil are vigorously shaken with 20 cubic centimeters of water. If after some standing the two layers have separated and become clear, then the uppermost shall amount to at least 19 cubic centimeters.

III. Ether.

1. *Specific gravity.*—The specific gravity of ether should not amount to more than 0.730.

2. *Mixability with water.*—Twenty cubic centimeters of ether are vigorously shaken with 20 cubic centimeters of water. After the settling, the layer of the ether should amount to at least 18 cubic centimeters.

IV. Shell-lac Solution.

Ten grams of the solution should leave behind at least 3.3 grams of shell-lac when evaporated on the water bath after the ensuing heating of the residue, left by evaporation in the exsiccation room during one-half hour at a temperature of 100° to 105°.

Note.—With reference to the thermometers to be used in the examination of the special methylenes and to the procurement of the same, that which was said concerning the pyridine bases (Appendix *e*, II) is in force. (Exch. decree of March 2, 1889.)

Appendix *m* to Supplement III.

[Form *i* to Supplement E of the executive ordinance.]

Crownland ———.

Financial district ———.
Revenue district ———.
Control district ———.
Methylation ———.

Record of the apothecary (name) ——— in ——— conscr. No. ——— relating to the receipt and the application of spirits procured free of duty for medicinal purposes, standing under the bond of the consumption tax, for the time from ——— till ———.

Debit (entry).									Credit (release).										
		The spirits were procured from—			Spirits at the temperature of +12° Réaumur.										Applied spirits.			Spirits.	
Item number.	Date.	Name.	Station (occupation).	Residence.	Quantity according to the official guage mark (liters).	Alcohol content according to the centigrade alcoholometer scale.	Hectoliter degrees (liters) of pure alcohol.	Signature.	Item number.	Month.	Day.	Taken from the package.	Quantity in kilograms.	Alcohol content.	90 per cent. K	70 per cent. K	Evidenced under item number of the laboratory book or by the standing vessel.	90 per cent. K	90 per cent. K
1	2	3	4	5	6	7	8	9	10	11	12	13	14	15	16	17	18	19	20

Note.—The quantity of alcohol (column 14) credited in kilograms and taken from the vessel is to be summed up at the end of every quarter, the final sum of kilograms thus gained to be converted into liters, and thus the liter per cent to be calculated and recorded.

This record is to be closed quarterly and residuary stock to be carried over as the first item into the record for the next quarter.

The quantity of alcohol used from the stand glass, by virtue of recipes, is to be entered on the *15th* and the last day of each month.

THE LAWS AND REGULATIONS OF BELGIUM GOVERNING DISTILLED SPIRITS, TO WHICH IS APPENDED THE REPORT OF THE BELGIUM COMMISSION THEREON.

LAWS, DECREES, AND REGULATIONS.

No. 2365.

EXCISES.

LAW RELATING TO THE MANUFACTURE AND IMPORTATION OF ALCOHOLS.

BRUSSELS, *the 15th of April, 1896.*

Leopold II, King of the Belgians, to all that are present and that are to come, greeting:

The Chambers have adopted and we have sanctioned that which follows:

CHAPTER I. *Foreign spirits.*

BASE AND AMOUNT OF DUES.

ART. 1. SEC. 1. Alcoholic liquids distilled abroad are subject, according to the quantities imported, to the following entry dues:

	Per hektoliter.
Spirits of all sorts:	*Francs.*
In hoops (casks), at 50 degrees at least of the Gay-Lussac alcoholometer, at a temperature of 15 degrees on the centigrade thermometer	100
In hoops (casks), for each degree above 50	2
In bottles, without distinction of degree	200
Liqueurs, without distinction of degree	200
Other alcoholic liquids	134

SEC. 2. As "liqueurs" will be considered all spirits that have undergone any preparation whatsoever. Prepared spirits, other than preparations with absinthe, imported otherwise than in bottles, the real alcoholic strength of which does not exceed the apparent alcoholic tenor by more than 2 degrees, may be admitted under the provision for "spirits of all sorts in hoops (casks)" upon condition that the importer, besides the apparent degree, declares their real degree, which shall serve as the base for the calculation of the duties.

SEC. 3. Methylene and methylic alcohol, amylic alcohol as well as homologous alcohols, will be assimilated to "other alcoholic liquids."

SEC. 4. The dues for the "spirits of all sorts in hoops" will be calculated by degrees and by tenths of a degree; the fractions inferior to one-tenth of a degree will be ignored.

ART. 2. The liquids designated in sec. 3 of art. 1 may be admitted under total or partial exemption from the entry dues, upon conditions to be determined by the minister of finances, provided they are destined exclusively for industrial purposes.

CHAPTER II. *Domestic spirits.*

DIVISION I. BASE AND AMOUNT OF THE EXCISE (INTERNAL TAX).—DEDUCTIONS, REDUCTIONS, DISCHARGES, AND EXEMPTIONS.

BASE AND AMOUNT OF THE EXCISE.

ART. 3. SEC. 1. The excise tax on spirits manufactured in the country will be levied on the quantities of phlegm or alcohol produced, at the rate of 64 francs per hectoliter at 50 degrees of the Gay-Lussa alcoholometer, at the temperature of 15 degrees of the centigrade thermometer.

SEC. 2. When the spirits are lower or higher in strength or in temperature, then the quantities for the calculation of the tox will be reduced to the volume corresponding with strength of 50 degrees at the temperature of 15 degrees, and that by means of tables of reduction approved by the minister of finances.

SEC. 3. For the statement of the strength and of the temperature the fractions inferior to one tenth degree will be ignored. The same will be done with fractions inferior to one-tenth of a liter, as far as the calculation of the dues is concerned.

ART. 4. The strength and the temperature of the spirits produced will be determined by means of instruments, the model of which is kept by the minister of finances.

DEDUCTION FOR LOSS BY THE RECTIFICATION.

ART. 5. SEC. 1. There may be allowed a deduction to compensate for the waste resulting from the rectification of phlegms or of crude alcohols.

SEC. 2. The amount of this deduction, which must not exceed 4 per cent of the quantities stated, also the conditions to which it (the deduction) is subject, will be determined by the Government.

REDUCTIONS OF IMPOST AWARDED TO AGRICULTURAL DISTILLERS.

ART. 6. SEC. 1. By agricultural distillers will be understood—

A. Those who cultivate for their own account in a region of 5 kilometers from the plant (or distillery) workable land in the proportion of 10 hectares for each hectoliter of spirits at 50 degrees, at the temperature of 15 degrees, taken in charge for the period of twenty-four hours.

In the regions of grass culture the agricole working may, upon conditions fixed by the Government, consist in whole or in part of meadows, the extension of which shall be double that of the workable land of which they take the place.

B. The cooperative societies that have for their object the working of a distillery.

The cultivators only can be parties thereto. The Government will determine the conditions which those societies, as well as the associates, shall fulfill.

SEC. 2. There will be granted to the rural distillers a reduction of 15 centimes per liter of phlegm at 50 degrees, at the temperature of 15 degrees.

In case of the production of lees for sale, the reduction will be 10 centimes, and the extension of cultivation imposed by the dispositions of section 1 shall be increased by one-half.

SEC. 3. To enjoy the reduction, the rural distillers must not produce other than phlegms (products of the first jet); they are held to deliver in total and exclusively to industrial rectifiers or distillers the phlegms which should not have been exported or methylated for industrial purposes.

SEC. 4. The Government will determine the conditions which the phlegms must meet, in order that the reduction may be applicable.

SEC. 5. There can in no case be considered as rural distilleries—

A. Those who use syrups, molasses, glucoses, wines or grape-cakes, or who distill fruits imported from abroad.

B. Those who deal wholesale or retail in distilled or fermented beverages.

ART. 7. SEC. 1. The rural distillers, contemplated in litt. A, sec. 1 of art. 6, the distillery (plant) of which has been in activity during the whole or a part of the period comprised between the 1st of January, 1894, and the 15th of December, 1895, will be authorized to rectify the phlegms of their manufacture, provided they will make such demand within three months, to be counted from the promulgation of the present law.

In case of death, the authorization may serve either the surviving consort, or one of the heirs in direct lineage.

There will be admitted to the benefit of the disposition of the present paragraph those distillers who work a distillery recently established, provided the declaration of possession has been regularly made before the 15th of December, 1895.

SEC. 2. As far as the distillers are concerned covered by sec. 1, the reduction of impost will be uniformly fixed at 10 centimes per liter, and the proportion of workable land which they are bound to cultivate will be reduced to 3 hectares per hectoliter of spirits produced.

SEC. 3. It will be lawful for them to surrender at any time the license, under the present article. This renunciation will be final.

ART. 8. SEC. 1. The reductions of impost shall be granted only in so far for so much as the taking in charge, for the period of twenty-four hours, does not, for each declaration of operation, in average exceed 4 or 5 hektoliters of spirits at 50 degrees, at the temperature of 15 degrees, in so far as the reductions provided in article 6 or the reduction provided in article 7 are concerned.

SEC. 2. If the rural distiller produces lees destined for sale the taking in charge must not exceed 3 hectoliters.

SEC. 3. The maxima of the taking in charge above determined shall not be applicable for cooperative societies that work an agricultural (rural) distillery. As far as they are concerned, the Government will determine the maximum of the taking in charge, which in no case can exceed either 1 hektoliter per associate or 1 hektoliter for the extent of culture specified in article 6.

ART. 9. No reduction of impost shall be granted—

First, to distillers, interested either directly or indirectly—

A. In the working or in the possession of several distilleries, if these establishments are distant from each other less than 10 kilometers.

B. In the sale of the products from those distilleries, or in the purchase or the preparation of first materials which they use.

Second, to distillers, whose distilleries are directed by the same director, or in whose distilleries the same workmen alternately perform the operations.

ART. 10. SEC. 1. The distiller who fulfills the required conditions for the obtaining of one of the reductions provided in articles 6 and 7 shall be held to make a declaration thereof to the receiver of the excises of the place before commencing the operations of the year.

SEC. 2. That declaration shall be accompanied by a statement, certified to as exact by the communal authority, indicating the number of hektares cultivated and also the nature and the situation of the parcels of ground.

ART. 11. If it be stated that a distiller has not (conformed himself) complied during the whole year to the divers conditions upon which the octroi of the reductions provided in articles 6 and 7 depends, all the operations performed by him during the course of the year of infraction shall be subject to the integral dues, and that without prejudice of the penalties incurred.

ART. 12. When an act of fraud ...at entails the suppression of the reduction shall have been detected in an agricultural distillery, then the moderation of the impost can no longer, during the course of the year, be applied to such distillery, whosoever may work it, nor to the distiller convicted of contravention (transgression), whatsoever distillery he may work.

TOTAL OR PARTIAL DISCHARGE OF THE EXCISE ON ALCOHOL DESTINED FOR INDUSTRIAL PURPOSES.

ART. 13. Total or partial discharge of the tax may be granted, by means of previous methylation, for the alcohols destined exclusively for industrial purposes—the heating and lighting herein comprised.

ART. 14. SEC. 1. The Government will determine the amount of the discharge, according to the nature of the industry.

SEC. 2. It will be authorized to establish a special tax for the benefit of the State in compensation for the eventual expenses for methylation and supervision.

ART. 15. The minister of finances will determine—

1. The process of methylation.
2. The nature and the proportion of the materials destined to render the alcohol unfit for human consumption.
3. The conditions and formalities to which the octroi of the discharge is subordinate.

ART. 16. The minister will keep record of each demand for authorization; the authorizations granted will be revoked in case of abuse, without prejudice of the penalties incurred.

EXEMPTIONS FROM THE EXCISE.

ART. 17. The rectification of phlegms or of alcohols is not subject to any excise dues.

ART. 18. At the issuance of the promulgation of the present law no plant for rectification can be established but in the chief places of the arrondissement (county), in the agglomerations of communities comprising a chief place of the arrondissement (county) or in the localities agreed to by the Government.

ART. 19. SEC. 1. No excise dues are levied on the production of liqueurs when they have been prepared exclusively by means of alcohols and of sweets, or of perfumes extracted from substances that can not produce alcohol.

SEC. 2. There will be no longer subject to the excise those who confine themselves to extract, by distillation, the perfumes either from plants, or strawberries, or raspberries, or currants.

The minister of finances will regulate the conditions to which the operations of such tradesmen shall be subject.

DIVISION II. DISPOSITIONS APPLICABLE TO DISTILLERS IN GENERAL.

I. Establishment of Distilleries.

DECLARATION OF POSSESSION.

ART. 20. SEC. 1. No one shall establish a distillery or put a distillery into activity without having made the declaration in writing to the receiver of excises of the place, fifteen days at least, before the beginning of operations.

SEC. 2. That declaration of possession shall be in conformity with the indications of the pattern (sample) kept by the Minister of Finances.

ART. 21. SEC. 1. In support of the declaration of possession, the person interested will remit to the receiver a plan of the internal arrangements of his establishment.

SEC. 2. This plan, drawn up in triplicate shall indicate the divers localities and buildings, their uses, and the arrangement of all the utensils, pipes, pumps, nachères, monte-jus, etc.

SEC. 3. The pipes or nachères (gutters) which will serve respectively to conduct the first materials—the phlegms or alcohols, the residues, the steam, the water—will be painted on the plan in different colors.

SEC. 4. The plan will be submitted to the approval of the Minister of Finances.

SEC. 5. After approval of the plans there will be delivered to the distiller a copy of his declaration of possession.

ART. 22. The purchaser, the renter, the assignee of a distillery in activity may not put themselves into possession of the same without having previously made the declaration and furnished the plan required by articles 20 and 21.

BELL AND BILL.

ART. 23. The distiller shall place a bell on the principal entrance to the establishment, and have posted above every opening of the distillery giving access from the public highway a bill bearing in characters apparent and painted with oil paints the word "Distillery."

UTENSILS, PIPES, PUMPS, ETC.

ART. 24. The vessels serving for the preparation, the steeping, the fermentation, or the distillation of the materials, as well as those that serve for the rectification of the phlegms and alcohols, will be established to remain in the interior of the distillery. They may not be moved without authorization by the administration.

ART. 25. SEC. 1. The fermentation vats will be disposed in such manner that it shall always be possible to approach them without any impediment in order to examine the interior of the vats as well as the tubes and pipes which abut thereon.

SEC. 2. It will be the same with the macerators, boilers, grinders, refrigerators, lee vats and yeast vats, and generally with all the utensils serving for the preparation of materials with a view of distillation.

SEC. 3. In those distilleries where several fermentation vats do exist, the blow-off cock of each of these vats will be placed in a spot conveniently lighted and of easy access; it will be disposed in such manner that it can receive a plomb (lead seal), and that it is impossible to discharge the materials contained in the vat without removing or altering that plomb.

The arrangements made by virtue of the present paragraph will be submitted to approval by the administration.

SEC. 4. For the fermentation vats comprised in the declaration of operation, the plomb (lead seal), provided for in sec. 3, will be applied before the recording of a putting in maceration upon the register, whereof art. 43 is speaking. It may not, under any pretext, be removed before the moment when the materials are put in distillation. As far as vats not used are concerned, the blow off cock will remain plombed (sealed by the lead) all the time during which those vessels are not used.

SEC. 5. The distiller or his authorized agent will apply, by means of the pinchers mentioned in sec. 6, a neat and visible print upon the portion of the lead traversed by the cord. At the time of their visits the excise agents will apply a particular imprint upon that portion of the lead which is reserved for them. The distiller will be responsible for the good preservation of the leads.

SEC. 6. The distillers will be held to furnish, besides the cord, the leads and the plombing pinchers after the model retained by the Minister of Finances.

ART. 26. SEC. 1. All the tubes, pipes, gutters, and pumps of the distillery, as also the conduits serving for the discharge of the residues coming from the distilling apparatuses, ought to be placed in evidence, isolated and disposed in a manner that they may easily be inspected.

SEC. 2. The conduits will be painted in different colors according to their destination, to wit, red for the phlegms or alcohols, black for the steam, white for the water and the residues.

ART. 27. SEC. 1. There may not exist in the fermentation cellars of the distilleries neither open gutters, fixed or movable, nor tubes, pipes, or transportable conduits.

SEC. 2. There shall merely be admitted in those localities the solidly fixed conduits serving to conduct the water and the first materials. Those conduits ought to be placed or arranged so as to render impossible the removal of liquids contained in the fermentation vats.

SEC. 3. The arrangements made by virtue of the preceding paragraph will be submitted to the approbation of the Minister of Finances.

ART. 28. SEC. 1. There may not exist in the cellars, nor above the tubes, pipes, gutters, pumps, nor above any vessel or utensil whatsoever, adjustments or apparatuses being able to serve in the removal before the distillation of the whole or of a part of the materials or of the alcohol contained in the fermentation vats.

The alcoholic steams (vapors) in suspension in the fermentation cellars may not be collected in any wise.

SEC. 2. The minister of finances may, upon conditions which he will determine, authorize modifications of the provisions of sec. 1, in order to permit the distillers to collect the carbonic acid disengaged during the fermentation.

ART. 29. SEC. 1. The alembics, columns, and generally all the distillery apparatuses comprising the coolers will be established in such way as to be easily inspected. If the apparatuses rest upon masonry or upon other supports, such masonries or supports should be provided with sufficient openings to permit complete discovery of any illicit conduit or pipe.

SEC. 2. The standard, provided with an alcoholometer and a thermometer, which receives the phlegms or alcohols arising from the distilling apparatuses, ought to be surmounted by a glass globe fixed in such manner that no previous removal of liquid there can be effected.

A cock can always be arranged on the distilling apparatuses to serve for the taking of samples (proofs).

SEC. 3. The model of that cock, the same as the arrangement made by virtue of sec. 1, will be submitted for the approval of the minister of finances.

ART. 30. SEC. 1. The alembics, columns, and generally all the distilling apparatuses will be fastened to one or more measuring vessels arranged in a special room.

SEC. 2. The minister of finances will keep the model and will regulate the mode of arrangement and of the closure of the measuring vessels and of the special room.

SEC. 3. He may, besides this, demand that between the coolers of the distilling apparatuses and the measuring vessels comptrollers be placed, the model of which he likewise will keep, and the arrangement and manner of use of which he will regulate.

ART. 31. SEC. 1. The range of pipes abutting to the distilling apparatus, as well as that range which abuts to the measuring vessel, will be placed in such form as to render impossible every fraud by abstraction of materials, alcoholic steams, or liquids.

SEC. 2. These arrangements shall be submitted to the approval of the minister of finances, who may prescribe the placement over the ranges of pipes, of plumbs, chains, or double wrappings deemed necessary.

SEC. 3. If the distilling apparatus admits of pipes serving for the discharge of steam, these pipes will abut to the free air and will be disposed in such manner that the condensation waters lose themselves during the discharge.

GAUGING AND NUMBERING OF THE VESSELS.

ART. 32. SEC. 1. The capacity of the fermentation vats of the measuring vessels and of the counters will be stated by (empotement?) wet measurement, according to the rules fixed by the minister of finances and with the aid of instruments and measures agreed to by him.

SEC. 2. The contents (capacity) of the other vessels and utensils will be stated by metric gauging (measurement).

SEC. 3. The distiller will be invited to be present at each operation of empotement or of gauging.

SEC. 4. The employees will draw up minutes of the gauging in three copies, one to be remitted to the distiller they mention therein, as the case may be, in the absence of the same or his refusal to sign that act.

ART. 33. The distiller who believes himself injured may within three days that follow the gauging of the vessels in his distillery demand a final (contre) verification.

ART. 34. The employees may, by virtue of an authorization by the subinspector or by an official of high rank, at all times proceed to the final (contre) verification of the capacity of the fermentation vats of the measuring vessels and of the counters.

ART. 35. When the employees have informed a distiller that they propose to proceed to the final (contre) verification by wet measurement of one or more vessels, no change will be admitted in the said vessels until the operation of gauging is terminated.

ART. 36. The distiller ought, at every requisition by the employees, to present the vessels comprised in the minutes of gauging. These vessels will be numbered and bear an apparent inscription in oil paint indicating their number, their capacity, and their destination.

CHANGE OR REPAIR OF UTENSILS.

ART. 37. SEC. 1. All modifications in the rooms or in the tools of the distillery, all changes, repairs, or replacements of one or more vessels recorded in the gauging minutes, ought to be previously declared to the receiver of excises of the place.

The declaration will be accompanied, if it takes place, by the amended plan in triplicate issue.

SEC. 2. The distiller must not make use of new or modified vessels, until they shall have been gauged by the employees and the amended plan shall have been approved by the minister of finance.

DISTILLERIES IN NONACTIVITY—SALE, CESSION, LOAN, ETC., OF UTENSILS OR APPARATUSES.

ART. 38. SEC. 1. Every possessor of a distillery in nonactivity, or of distilling apparatuses, helms, alembics or worms, will be held to make declaration thereof to the receiver of excises of the place.

SEC. 2. There will be relieved from that obligation—

A. The directors of , the mechanical constructors, the boiler makers, and other artisans who, by trade, sell, manufacture, or repair those utensils, provided that the latter are not permanently fixed;

B. The pharmacists and chemists, provided the capacity of the vessels does not exceed 50 liters, and that they do not use them for the manufacture of spirits.

SEC. 3. The distillers, constructors or detenteurs must not sell, rent, loan, or otherwise cede to third parties the utensils designated in sec. 1 without making, within twenty-four hours, the declaration thereof to the receiver of excises.

SEC. 4. The importers of similar utensils will be held to make known the consignee (destinataire) to the receiver of the office of entry.

SEC. 5. The persons designated in secs. 1 to 3 will keep a register, in which they immediately enter the sale, the renting, the loaning, or the cession of the apparatuses and utensils, with indication of the name and of the domicile of the person to whom they have been sold, rented, loaned, or ceded. They ought to exhibit that register, at every requisition, to the officials and employees of excises.

ART. 39. SEC. 1. All the apparatuses of a distillery in nonactivity will be placed under seals at the expense of the administration. The employees will proceed to that operation in the manner prescribed by art. 32, secs. 3 and 4. They will mention in the minutes the number of seals or stamps affixed to each utensil.

SEC. 2. The depositary will be required to reproduce, at every requisition, the utensils placed under seals.

II. Operations of manufacturing.

DECLARATION OF OPERATION.

ART. 40. SEC. 1. The distiller will be bound to remit to the receiver of excise of the place, at the latest on the morning of the first steeping or mashing of the materials, a declaration of operation conforming with the indications of the model kept by the minister of finances, and which refers to an uninterrupted series of five days at least and not more than thirty days.

SEC. 2. He may not begin before having received a copy of his declaration, delivered by the receiver. He will be bound to keep this copy in the plant during the operation which is the object of the declaration.

SEC. 3. The declaration of operation will mention those vessels recorded in the minutes of gauging which the distiller intends to utilize, be it for the preparation, the fermentation, and the distillation of the first materials, or be it for the rectification of sediments or alcohols.

SEC. 4. When, in the course of the work which is made the object of the declaration, the distiller wants to augment the number of the vessels employed or the quantity of spirits which he has declared his intention to produce, he will make a supplementary declaration, prescribed below, for the number of days still to occur.

ART. 41. The declaration of operation will mention, notably—

1. The nature of the first materials employed.

2. The duration of the periods of fermentation, within the limits indicated in art. 50.

3. Whether the distiller intends or not to perform operations of steeping, of mashing, or distilling on Sundays or legal holidays. If in the negative, the Sundays and legal holidays will not be counted in the computation of the periods of fermentation.

4. The presumed rendition into spirits at 50 degrees proof at the temperature of 15 degrees for the period of fermentation, and per hectoliter of the contents of the vats. The total quantity resulting from the declared rendition must not be less than 40 liters per period of twenty-four hours.

5. The hour of commencing the first distillation of every day; also the date and the hour of commencing the period during which the produce of the distillery shall be kept for the inspection of the agents of the administration in conformity with art. 56.

6. Whether the distiller intends to profit by one of the reductions of 15 or of 10 centimes provided in articles 6 and 7; and, if in the affirmative, whether he complies with all the conditions imposed by the law necessary to obtain said moderation of the impost.

7. Whether or not he intends to produce lees destined for sale.

ART. 42. The legal holidays provided in No. 3 of the preceding article will be: The first day of the year, Easter Monday, Ascension Day, Pentecost Monday, 21st of July, Assumption Day, All Saints Day, and Christmas Day.

JOURNAL REGISTER OF OPERATION AND BOOKLET OF THE STAND OF THE OPERATIONS.

ART. 43. The distiller will keep in his distillery a register conforming to the model kept by the minister of finances, upon which he enters, in full, and according to the measure of the operations for each fermentation:

A. The nature and the quantity of first materials used.

B. The dates and hours of the putting into (mash) maceration. This entry will mention the number of the vat and, eventually, that of the auxiliary vessels, such as grinders, boilers, macerators, or coolers.

C. The rendering of the materials contained in the vat into spirits at 50 degrees at the temperature of 15 degrees. The rendering will be entered all in letters upon the register at least fifteen minutes before the vat is put into distillation.

D. The date and the hour of putting into distillation, before the transfusion of the materials into the distilling apparatus is commenced.

ART. 44. The distiller who, after his declaration, permits his vats to ferment during a period of more than twenty-four hours will besides keep a register conforming to the model kept by the minister of finances, upon which he will enter the density and the temperature of materials:

1. Immediately after the putting into fermentation.

2. Twenty-six hours after the hour indicated for the putting into mash.

3. At the moment of the entry of the distillation required by litt. C of the preceding article.

ART. 45. Special measures concerning the declaration of operation and the journal register of operation may be prescribed by the minister of finances with regard to the distillers who work with more than one series of vats in one or more fermentation cellars.

ART. 46. The excise officials at the occasion of their visits will enter the state of the operations into a little book which the distiller must keep in the distillery.

ART. 47. The registers and the booklet prescribed by articles 43, 44, and 46 will be furnished by the administration.

ART. 48. The secretary of finances may authorize some modifications of the rules in articles 43 and 44 in favor of the distillers whose average of takings in charge for a period of twenty-four hours is less than 2 hectoliters of spirits at 50 degrees, at the temperature of 15 degrees, if they do not produce any lees destined for sale and do not rectify their sediments.

OPERATIONS OF SOAKING, MASHING, AND FERMENTATION.

ART. 49. SEC. 1. The preparation of the materials destined for distillation will be carried on in the rooms of the distillery.

This rule, however, will not apply to the malting and grinding of the grains.

SEC. 2. Any material soaked, mashed, fermented, or in fermentation must not be used for other purposes.

The minister of finances may annul this interdict, especially with reference to fruits, wine, and cider.

ART. 50. The soakings, mashings, and fermentations may not be done in vessels other than those declared respectively for these uses. These operations have to be performed for periods of twenty-four, forty-eight, seventy-two, or ninety-six hours, counted from midnight.

ART. 51. SEC. 1. The mashings shall be performed following the order of numbers determined by the minutes of gauging, to the vats mentioned in the declaration of operation. The vats used supplementarily may be put in mashing before or after all the others, but only subsequent to the first interruption of the operations.

SEC. 2. The administration may allow, in exceptional circumstances, modifications of the preceding disposition.

ART. 52. SEC. 1. The fermented material must not be transfused except into the condensator, the retort, or the distilling apparatus.

SEC. 2. This disposition may be dispensed with in case of production of lees or yeast.

SEC. 3. It is prohibited to enlarge the density of the materials contained in the fermentation vats after cooling or dilution.

PRODUCTION OF LEES OR YEAST.

ART. 53. SEC. 1. Every distiller will be allowed to produce of lees or yeast only what he needs for his manufacture.

SEC. 2. The distiller who works cereals will be authorized to manufacture lees for sale; the Government may authorize the production of lees in the distilleries where other than cereals are used as first materials.

SEC. 3. The minister of finances will determine the methods of inspection to which the distillers producing lees or yeast will be bound to accommodate themselves.

THE OPERATIONS OF DISTILLATION.

ART. 54. SEC. 1. The dispositions of art. 51 concerning the order of the puttings in mash will be applicable to the puttings in distillation.

SEC. 2. The distiller may retard for two hours the puttings in distillation of the first vat by mentioning it in a declaration written in ink on the reverse or back of the declaration of operation two hours or less before the hour indicated in this document for the beginning of the operation.

ART. 55. SEC. 1. The operations of distillation must not be done between 8 o'clock in the evening and 6 o'clock in the morning.

SEC. 2. The Government may authorize modifications of sec. 1 on conditions which it may determine.

STATEMENT OF THE VOLUME AND THE STRENGTH OF THE SEDIMENTS AND OF THE ALCOHOLS.

ART. 56. The products of the distillation of one day or of a period of work will be gathered and put together either directly or occasionally by the inspector, in the measuring vessels mentioned in art. 30. They will be kept there for the disposition of the agents charged to prove the output during a period, the beginning and end of which will be fixed by the minister of finances.

ART. 57. The temperature of the sediments or alcohols, in the moment of their presentation for control, must not be less than 5 degrees nor more than 30 degrees; their strength must not be less than 25 degrees at a temperature of 15 degrees.

ART. 58. SEC. 1. Any material tending to lower the degree of strength of the sediments or the alcohols must not be introduced into the fermented materials in the distilling apparatus nor in the counters and measuring vessels, either directly or indirectly.

SEC. 2. The emptying of the measurings vessel will not be authorized until the statement of the output by the agents of the administration. It may only be done after the expiration of the period provided for in art. 56, even if the statement of the output has taken place before the expiration of this period.

ART. 59. SEC. 1. The agents charged with the surveillance will have to draw up an abstract after the model given by the minister of finances, upon which they shall enter—

A. The presumed output mentioned in the declaration of operation.

B. The output entered by the distiller upon the register of the operation journal.

C. The results of the verifications of the outputs, in the case provided for in art. 78.

D. Eventually, the indications of the counter.

E. The results of the statements of the contents of the measuring vessels reduced to 50 degrees at a temperature of 15 degrees.

SEC. 2. The highest product resulting from these notes in the abstract will serve as a base in the definitive taking in charge. It will be made known to the excise official at the expiration of every declaration of operation by the agents cited before, who to that effect will draw up the necessary discount.

SEC. 3. The act of discount will establish the total taking in charge, the eventual deduction for waste by rectification, and the net taking in charge.

INTERRUPTION OF THE OPERATIONS.

ART. 60. SEC. 1. If the distiller, by accident or by higher force, should have to interrupt the course of his operations, he will be relieved from dues for the balance of spirits covered by the declaration of operation

and which has not been produced. The operations must not be resumed but by means of a new declaration.

SEC. 2. The distiller may likewise obtain relief from dues for the corresponding quantities of spirits deficient through loss of fermented materials which will be regularly reported by the employees.

The discharge will only be accorded when the loss results by an unforeseen accident or by higher force.

SEC. 3. The distiller will get the discharge only when he has made immediately the written statement of the interruption of his operations or the loss of his fermented materials to the excise official of the place. The accident if unforeseen or by a superior force will be stated by the employees.

SUSPENSION OR CESSATION OF THE OPERATIONS.

ART. 61. The distiller who wishes to suspend or stop operations will be obliged to inform the excise official three days before the expiration of the declaration that is running.

ART. 62. SEC. 1. Notwithstanding the suspension or cessation of his operations the distiller-rectifier will be allowed to rectify the sediments obtained during his last declaration of operating. He will make, therefore, the declaration prescribed in art. 84.

SEC. 2. This declaration will only definitively be admitted after the employees shall have proved its exactness.

III. *Divers regulations.*

PROCESSES AND NEW APPARATUSES.

ART. 63. The employment of vessels or utensils of a new system or of new processes of manufacture will be regulated to the conditions determined upon by the minister of finances.

THE WORKING OF DISTILLERIES AND OTHER INDUSTRIES IN THE SAME BUILDING OR ENCLOSURE.

ART. 64. It is prohibited to establish or to put in activity in the same building a distillery and one or more other plants the products of which are subject to the excise, at least if the plants are not separated by a wall which intercepts all communication between them.

ART. 65. SEC. 1. In every enclosure where a distillery exists it is prohibited to put into fermentation, for the exercise of another industry, materials proper for the production of alcohol.

SEC. 2. This prohibition will not apply to the ordinary fermentation of beer to be drunk in the breweries established under the rules of art. 64.

COMMUNICATIONS BETWEEN THE DISTILLERIES AND OTHER ESTABLISHMENTS.

ART. 66. There shall not exist any tubes, pipes, or any kind of conduits nor any communication other than through the open air between a distillery and a building which is not a part of it.

DUTIES OF THE DISTILLERS.

ART. 67. SEC. 1. The distiller will be bound to facilitate the surveillance of his establishments.

SEC. 2. The principal door of entrance of the building of every lately established distillery shall not be situated more than 100 meters from the public street.

Direct communications must exist between this portal and the divers rooms of the plant.

SEC. 3. The stairs serving for these communications shall be commodious and provided with banisters.

SEC. 4. There shall not exist in the passages leading to the different workshops of the plant any object or deposit of materials which would obstruct them or render them difficult or dangerous to use.

ART. 68. SEC. 1. The distiller will be bound always to furnish and to extend to the employees of the administration the means to verify (1) the first materials destined for operation (nature, quantity, weight); (2) the liquids and the materials contained in the vats, big boilers, alembics, columns, generators, and in every other vessel, receptacle, or apparatus of his plant.

SEC. 2. To that effect he will be bound (1) to furnish the necessary balance and the weights; (2) to open the discharging faucet of the apparatus on the requisition of the employees.

ART. 69. SEC. 1. In case of dispute about the nature of the materials in a vessel or which would exist illicitly in the plant, or in case of doubt about the nature of the residues of the distilling apparatuses, the distiller will be obliged to furnish to the employees on their demand two bottles of samples, of half a liter at least, of the materials which they will designate to him.

SEC. 2. It is the same thing when there is a dispute at the moment of the statement of output about the nature or the strength of the sediments or the alcohols. In this case the taking in charge will not be final until after decision by the administration.

RIGHT OF VISITATION AND INSPECTION BY THE AGENTS OF THE ADMINISTRATION.

ART. 70. SEC. 1. Pending the duration of the work, the distillery shall always be accessible to the employees, and the distiller shall there be present or be represented by somebody, in order to give to the employees the necessary information at the time of the visit.

SEC. 2. The terms of the preceding paragraph will be applicable:

A. During the preparation of the materials in view of fermentation, in removing the charges from the vats or the auxiliary vessels (mashers, boilers, grinders, etc.).

B. Pending the operations of distillation and rectification.

C. Pending the period fixed for the settlement of the output.

SEC. 3. At other times of activity the distiller will be bound to give to the employees free access into his plant (usine) at the latest two minutes after they have rung the bell, or in default of a bell have knocked three times, every time with an interval of two minutes.

ART. 71. The disposition of section 1 of the preceding article will be applicable at all times of activity in the distilleries where a deed of fraud has been proved by a judiciary condemnation, as well as those that are worked by a subordinate who has been convicted of fraud.

ART. 72. SEC. 1. The minister of finances may, when the circumstances require it, assign permanent employees to the distillery.

SEC. 2. In this case the distiller will be bound to furnish the employees an office with a surface at least 12 meters square.

This office, conveniently kept, lighted, and heated at the expense of the distiller, will be furnished with a table, three chairs, and a cupboard supplied with a key. The employees will have the exclusive use of this office and keep the key of it.

ART. 73. In each distillery there must be found in a place easily accessible and conveniently lighted, near the distillery apparatuses, a desk for the exclusive use of the agents charged with the surveillance.

This desk will be placed in the conditions determined upon by the administration.

Two chairs shall be put to the disposition of the employees.

ART. 74. SEC. 1. An issue of the plan of the plant (usine), copies of the minutes of the gauging, copies of the declaration of operation, and the abstract (relevé), spoken of in article 59, will be kept in the desk mentioned in the preceding article.

SEC. 2. The distiller has to watch for the safe-keeping of the objects deposited in this desk.

SEC. 3. He must not in any case alter the entries made into the registers and in the books prescribed by the present law.

ART. 75. A slate shall be put up, according to the instructions of the administration, in the room of the vessel measurers, in a well-lighted place, to facilitate the determination of the strength of the sediments and alcohols.

STATEMENT OF THE DENSITY AND OF THE TEMPERATURE OF THE MATERIALS, ALSO OF THEIR RENDITION INTO SPIRITS.

ART. 76. The distiller will be bound to facilitate to the agents of the administration the statement of the density and the temperature of the materials contained in the divers vessels of his plant, also the rendition in spirits. He will place the necessary laborers for this purpose at the disposition of the employees.

ART. 77. In securing the statement of the density of the materials, the distiller will furnish the necessary utensils, with the exception of densimeters and thermometers.

ART. 78. SEC. 1. The agents of the administration may state the rendition in spirits of one or several fermentation vats with the aid of a special apparatus, the model of which is kept by the minister of finances. They will verify by this manner the entries made by the distiller, in virtue of the article 43, litt. C, in the register of the operation journal.

SEC. 2. The distiller will be bound to provide his fermentation vats with a metric chain, for allowing the agents of the administration to state the width which these vessels present in the moment of the verification spoken of in section 1. In the case where the construction of the vats would not allow the adoption of a metric chain, the width could be stated by the aid of gauge staffs (measures), in conformity with the official model, or of any other means agreed to by the minister of finances.

SEC. 3. The result of the statements where section 1 speaks of a deduction of 4 per cent having been made will be entered by the employees in the abstract treated of in article 59.

DIVISION III. DISPOSITIONS SPECIALLY APPLICABLE TO CERTAIN INDUSTRIAL CATEGORIES.

DISTILLATION OF MOLASSES.

ART. 79. The molasses contained in the reservoirs, barrels, cisterns, bacs, etc., shall indicate a higher density than of 20 degrees Baumé, at a temperature of 15 degrees. There must not be added thereto either farina or lees.

ART. 80. The distiller will be bound to enter upon the register of the operation journal the weight and the degree of the molasses or sirups which he carries in his fermentation vats.

DISTILLATION OF KERNEL AND STONE FRUIT.

ART. 81. The distiller of kernel and stone fruit will make his declaration of operation in two parts, of each of which a full copy will be delivered.

ART. 82. SEC. 1. The first part of the declaration will contain the indications relative to the fermentation of the material, the second one those that concern the distillation.

SEC. 2. Every one of these partial declarations will be made in the office of the excise official of the place at the latest on the morning of the beginning of the operation to which it relates.

SEC. 3. The disposition of art. 40, sec. 1, relative to the duration of the operations, and that one of art. 41, fourth, relative to the minimum of production of spirits, will be only applicable to that part of the declaration which concerns the distillation.

RECTIFIERS, LIQUORISTES, AND MANUFACTURERS OF FINE LIQUORS OR TOILET WATERS.

ART. 83. The articles 20–24, 26, 29, sec. 1; the article 32, secs. 2–4; the articles 33, 36, 37; the article 38, secs. 1, 3, and 5; the articles 39, 40, 46, 47; the article 55, sec. 1; the articles 63–67; the article 68, sec. 1, and the second of sec. 2 of the same article; the articles 69, 70, sec. 1, and the articles 72–75 will be applicable to the rectifiers.

ART. 84. The declaration of operation described by sec. 1 of article 40, will be remitted by the rectifier to the excise official of the place at the latest in the morning of the first operation of rectification.

ART. 85. The rectifier shall keep—

1. A register of magazine in conformity with the model kept by the minister of finances, and notably indicating—

A. The date and hour of the commencement and of the end of the operations; also the quantities and the strength of the sediments or alcohols put to work and the products obtained.

B. The numbers of the vessels in which the rectified products are gathered.

C. The date of the dispatch (expedition) of these products, with the indication of the volume and strength of the quantities dispatched.

ART. 86. SEC. 1. The agents of the administration will have the right to take in advance some samples of the sediments or alcohols and of the rectified products. For this purpose the rectifier will be bound to furnish them two bottles, of a quarter of a liter at least, of the material which they will designate to him. He will be bound, in the same, to make known the provenience of the sediments or alcohols of which the samples are taken in advance.

SEC. 2. The employees will have also the right to proceed to reappraisements in the rooms and dependencies of the rectification plants.

For this purpose the cisterns, reservoirs, barrels, and other recipients destined for receiving the sediments and the alcohols will be disposed in a way to be easily surveyed.

ART. 87. SEC. 1. The obligations imposed upon rectifiers will be applicable to liquoristes; also to industrial distillers who rectify the sediments or the alcohols which are not their manufacture. .

SEC. 2. Every time the declarations of operation of the liquoristes may be made for a period of six months in the maximum.

ART. 88. The existence of methylated alcohol or of one of the products denominated in article 1, sec. 3, will be prohibited in the manufactories of liquors, of fine liquors, or toilet waters.

ART. 89. The articles 20, 68, sec. 1; 68, sec. 2, second, and 70, sec. 1, of the present law will be applicable to the manufactories of fine liquors or toilet waters.

CHAPTER III. *Minimum of the quota-part of the State in the proceeds from impost.*

ART. 90. In the repartition between the State and the communal funds of the annual proceeds of the excise dues on the manufacture of domestic spirits and of the entry dues on foreign spirits the quota-part of the State will be fixed at 25,175,000 francs at the minimum, deducting from this sum the quota-part of the State the proceeds from the entry dues on vinegar and acetic acid and from the excises on vinegars of beer.

CHAPTER IV. *Counts of credit for the payment of the excises.*

ARREARAGES—SECURITY—TERMS OF CREDIT.

ART. 91. The declaration of operation will establish right to the dues.

ART. 92. The distiller, by means of a sufficient security, shall obtain a credit of four months for the payment of the dues resulting from the declarations of each month. The term of credit will end with the last day of the month during which the declaration of operation expires.

ART. 93. The industrial distiller, the rectifier, the wholesale dealer, the liquoriste, and also the manufacturer of fine liqueurs or toilet waters, by means of a sufficient security, shall obtain a credit for dues, the transcript of which they have accepted, with the change, to fulfill the obligations which were incumbent upon the previous debtor.

ART. 94. The security will not be exacted from the agricultural distiller who enjoys the reduction provided by sec. 2, of article 6, who, by depositing with the excise official his declaration of operation, will produce a declaration by an industrial distiller or by a rectifier, by which the same give security to the treasury, and engage themselves to rectify in their (stills) plants the sediments to which the declaration of operation refers, and also to take in charge the dues upon their own account.

TAKING IN CHARGE ON THE CREDIT ACCOUNTS.

ART. 95. SEC. 1. The credit account on the term of the distiller will be debited by the dues resulting—

1. From the quantities mentioned in the declarations of operation.
2. From the differences still existing between these quantities and those mentioned in the discount.
3. From the correcting of acknowledged errors.

SEC. 2. The credit account of the industrial distiller may be debited, besides this, with the dues resulting—

1. From the quantities added to the declarations of agricultural distillers in the case provided by article 94.
2. From the quantities transcribed by virtue of sec. 2, lit. B, of article 96, or of sec. 1, lit. B, of article 107.

SEC. 3. The dispositions of sec. 2 will be applicable upon the credit account of the rectifier.

SEC. 4. The takings in charge, as set forth in secs. 2 and 3, will be final after the accomplishment of the formalities indicated in article 99, and when it shall have been acknowledged that the sediments establish the conditions determined in the execution of article 6, sec. 4.

SEC. 5. The credit account of the wholesale dealer, of the liquoriste, or of the manufacturer of fine liqueurs or toilet waters will be debited with the dues transcribed by virtue of sec. 1, lit. B, and sec. 4, lit. B, of article 96. The credit account of the liquoriste, or of the manufacturer

of fine liqueurs or of toilet waters may be debited further with the dues transcribed by virtue of sec. 5, 1, lit. B, of the same article.

SETTLEMENT OF THE CREDIT ACCOUNTS.

ART. 96. SEC. 1. The settlement of the credit account of the industrial distiller will take place—

A. By payment of the taxes on their becoming due.

B. By the transcription of dues, with the delivery of the spirits, on account of a wholesale dealer, or of a liquoriste, or of a manufacturer of fine liqueurs or of toilet waters.

C. By exportation with discharge from the excise tax.

D. By deposit of the spirits in a public warehouse.

E. By total or partial discharge, for the sediments or alcohols destined for industrial purposes.

F. By discharge on account of interruption of operations.

G. By discharge on account of correcting acknowledged errors.

SEC. 2. The settlement of the credit account of the agricultural distiller enjoying one of the reductions provided in article 6 will take place—

A. By payment of the taxes on their becoming due.

B. By transcription of the dues, with discharge of the sediments, on the account of an industrial distiller or of a rectifier.

C. By exportation with discharge of the excise tax.

D. By deposit of the sediments in a public warehouse.

E. By total or partial discharge, for the sediments destined for industrial purposes.

F. By discharge on account of interruption of operations.

G. By discharge on account of correcting acknowledged errors.

SEC. 4. The settlement of the credit account of the rectifier shall take place—

A. By the payment of the taxes when due.

B. By the transcription of the dues, with delivery of the spirits, on the account of a wholesale dealer, of a liquoriste, or of a manufacturer of fine liqueurs or of toilet waters.

C. By exportation of the spirits with the discharge of the excise tax.

D. By deposit of the spirits in a public warehouse.

E. By total or partial discharge, for the sediments or alcohols destined for industrial purposes.

SEC. 5. The settlement of the credit account of the wholesale dealer, of the liquoriste, or of the manufacturer of fine liqueurs or of toilet waters will take place:

1. As far as the wholesale dealers are concerned:

A. By the payment of the taxes due.

B. By the transcription of the dues, with delivery of the spirits, on the account of a liquoriste or of a manufacturer of fine liqueurs or of toilet waters.

2. As far as the liquoristes and the manufacturers of fine liqueurs or of toilet waters are concerned:

A. By the payment of the taxes due.

B. By exportation, with discharge of the excise, of the liqueurs, also of the fine liqueuers or of the toilet waters.

ART. 97. SEC. 1. For the settlement of the credit accounts by exportation, by deposit into a public warehouse, and by deposit in a public warehouse, the discharge of the excise will be calculated according to the tax and the bases which have served to establish the taking in charge.

SEC. 2. The discharge will be reckoned for the terms that next will become due.

ART. 98. SEC. 1. The settlement of the credit accounts by transcription, exportation, deposit into public warehouses, or deposit into public warehouses, must not take place, except in quantities of at least 2 hektoliters, marking 50 degrees, at the temperature of 15 degrees. If the spirits mark a degree of concentration lower or higher, then the quantity will be increased or diminished at the ratio of the difference.

SEC. 2. The minimum of 2 hektoliters will not apply, if the spirits form the rest of takings in charge or if they are exported as ship provisions.

CHAPTER V. *Transport of sediments, subject to the rule of article 6, sec. 3.*

ART. 99. SEC. 1. Every transport of sediments provided in sec. 3, article 6, must be covered by a pass bill or by a bond pass bill. Under penalty of nullity, these documents shall be submitted to verification by the officials of the places of departure and of destination.

SEC. 2. At the place of departure, as also on the arrival at destination, the employees will previously take two samples of the sediments, each of one-fourth of a liter at least. These samples will be verified with the stamp of the administration. The distiller or the consignee will have the right likewise to place his stamp upon the samples. A third sample, evidenced with the same formalities, may be previously taken on the demand of an interested person.

SEC. 3. The distiller and the consignee will be bound to furnish the necessary bottles.

SEC. 4. The chief official of the place of departure and also of the place of arrival will transmit one of the respective samples to the administration for analysis. They will preserve the other, which will be transmitted to the person interested, as soon as the final result of the analysis shall have been brought to their knowledge.

CHAPTER VI. *Exportation.*

EXPORTATION OF SPIRITS WITH DISCHARGE FROM THE EXCISE.

ART. 100. SEC. 1. The exportation, with discharge from the excise, of spirits and of liqueurs that are assimilated to them, will take place in the limit of quantity fixed by sec. 1 of article 98, unless it is for ship provisions; it will be performed by the officers to be designated by the Government and under the conditions established for merchandise of excise in general.

SEC. 2. The minister of finances will specify the liqueurs that are assimilated to spirits; he will determine the conditions which they must cover.

ART. 101. The minister of finances may subject the definitive liquidation of the discharge of dues for exported spirits to the production of an official document delivered at the entrance of the border country and stating the conformity, as to the quantity and to the strength of the spirits, of the declarations made in the two countries.

EXPORTATION OF FINE LIQUEURS OR TOILET WATERS, WITH DISCHARGE FROM EXCISE.

ART. 102. SEC. 1. Discharge from excise may be accorded in case of exportation, for the alcohol contained in the fine liqueurs and in the toilet waters.

SEC. 2. The minister of finances will regulate the conditions to which the industrials shall be bound to submit themselves, in order to obtain the discharge provided in sec. 1.

CHAPTER VII. *Public warehouse.*

ART. 103. SEC. 1. The deposit of domestic spirits into a public warehouse will take place in the limit of quantity fixed by sec. 1 of article 98. It may be done either in the name of the distiller or in the name of the dealer who accepts the cession of the spirits.

SEC. 2. The duration of the deposit will be unlimited.

SEC. 3. The removal of the spirits will take place in the limits of quantity fixed in article 98.

ART. 104. The public warehouse account will be settled—

A. By removal of the spirits for consumption, under payment of the excise tax counted according to the tax in force at the moment of removal.

B. By exportation under security for the dues.

C. By cession of the spirits in the warehouse to another dealer.

ART. 105. If, during their storage in the warehouse, the spirits become deteriorated or enfeebled below 45 degrees at the temperature of 15 degrees, they may be taken out to be rectified. This taking out may only be done by means of security for the dues, which become collectible for that part of the liquid which is not reintegrated within the delay fixed by the permit.

ART. 106. SEC. 1. The deposition into the public warehouse of the sediments produced by the agricultural distillers provided for in article 6 will take place in the limits of the quantity fixed by section 1 of article 98.

SEC. 2. The deposition, the duration of which is unlimited, shall be made in the name of the distiller.

SEC. 3. The removal (taking away) of the sediments will take place in the limit of quantity fixed in section 1 of article 98.

ART. 107. SEC. 1. The account of the public warehouse will be settled—

A. By exportation under security for the dues.

B. By transfer upon the credit account for term of an industrial distiller, or of a rectifier, with taking into charge of dues for the tax in force at the moment of the transfer.

SEC. 2. There will be accorded a credit for one month, to begin with the date of delivery of the bonded pass bill, for the payment of dues, of which section 1, Article B, treats.

ART. 108. SEC. 1. The spirits and the sediments deposited in a public warehouse in virtue of articles 103 and 106 have to submit to the revisions provided in article 48 of the law of March 4, 1846.

SEC. 2. The accounts will be debited with the stated excesses.

SEC. 3. The deficiencies not exceeding 1 p. c. of the taking in charge will be carried in discharge of the account. If they are more than 1 per cent, the dues are collectible on the amount of the deficiency which surpasses 1 per cent, at least if it is established that the deficiency did not arise from a fraudulent removal.

CHAPTER VIII. *Circulation and deposition in the rayon reserved by the custom-house.*

ART. 109. The transportation within the rayon reserved by the custom-house of a quantity of half a liter or more of alcoholic liquids

designated in secs. 1 and 3 of article 1 shall be covered by a document of the custom-house or excise.

ART. 110. The document delivered for liquids charged with impost according to their alcoholic strength will serve to cover the deposit of liqueurs if it is provided with a certificate of the official stating that the detainor has declared his willingness to convert into liqueurs the quantities mentioned in the document.

ART. 111. SEC. 1. The deposit of the spirits will not be validly justified by documents indicating an alcoholic strength inferior to that of the warehoused quantities.

SEC. 2. When the detainor desires to augment the degree of strength of the liquids in the magazine by the admixture of other spirits he will make the declaration thereof in advance to the official, and will proceed with the operation in the presence of the agents of the administration, who will state the result thereof on the back of the documents. The official will withdraw the first documents and will deliver a new one which states the quantities and the degree obtained by means of the admixture.

CHAPTER IX. *Penalties.*

ART. 112. There will be incurred a fine of 25 francs—

1. For lack of the writing desk mentioned in art. 23, or of a bell at the principal entrance to the establishment, if the desk or the bell are not put up within forty eight hours of the first written advertisement given by the official of excise of the place.

2. For the nonreproduction or the displacement of a vessel or utensil.

3. For the use of a vessel not bearing the indications prescribed by art. 36.

4. For the nonreproduction of the full copy of the declaration of operation.

5. For the default of a notice or a belated notice of the suspension or the cessation of operations.

ART. 113. There will be incurred a fine of 100 francs—

1. For all maceration begun too early or too late for more than an hour beyond the hour mentioned for operation in the register of the operation journal.

2. For the altering or not immediately presenting the register of the densities prescribed by art. 44.

3. For every inexact declaration of the density of the materials; the same for default of declaration of this density at the fixed hours.

ART. 114. A fine of 200 francs will be imposed—

1. For the breaking or altering of the seals put upon utensils or pipes other than those mentioned in articles 30 and 31.

2. For the nonreproduction of one of the sealed pieces, spoken of in section 1 of this article.

ART. 115. A fine of 500 francs will be imposed—

1. For augmentation of the capacity of the fermentation vats, if the contre-verification foreseen by article 34 shows a capacity superior to 2 per cent or more than that which is mentioned in the latest minutes of gauging.

2. For having, without previous declaration, taken down, repaired, or otherwise changed the capacity of vessels other than the counters and the vessel measurers recorded in the minutes of gauging.

3. For having substituted for the gauged vats other vats or vessels of greater dimensions.

4. For every sale, cession, or loan of utensils without declaration.

5. For anticipating or retarding from one to twelve hours beyond the hour indicated in the declaration of operation for the beginning and the end of the operations. Every anticipation or every retardation exceeding this number of hours will be assimilated to the operation of maceration or of distillation without the declaration set forth in article 124, No. 1.

6. For every violation of the provisions of sec. 5 of article 38, concerning the keeping of the register of declarations of sale, cession, etc., of apparatuses and utensils of the distillery.

7. For altering or not immediately reproducing the register of the operation journal prescribed by article 43, or of the booklet prescribed by article 46.

8. For not having operated the putting into distillation at the hour entered upon the register of the operation journal.

9. For every maceration operated in violation of article 51.

10. For infringement of the terms of article 64. In this case, every declaration of operation will be refused until the communication existing between the plants shall be intercepted.

11. For altering or not immediately reproducing the registers, the keeping of which is imposed upon the rectifiers by article 85.

12. For every erroneous or irregular entry made in said registers.

ART. 116. A fine of 1,000 francs will be incurred—

1. For every infringement of the conditions upon which the octroi of reductions foreseen in articles 6 and 7 is dependent or for the employment of a condition not in exact keeping with the purposes provided for in article 10.

2. For every contravention against article 26, without prejudice to penalties which could be incurred for using clandestine vessels. The distiller will incur a fine of 200 francs per diem for delay in conforming himself to the provisions of the said article 26.

3. For having forged or tried to forge the result of a gauging.

4. For every putting from one vessel into another operated in violation of article 52.

5. For every putting into distillation operated in contravention to articles 54 and 55, sec. 1.

6. For every contravention of the provisions of article 6, sec. 3, and of article 99. Furthermore, all the operations performed by the distiller since the beginning of the year will be submitted to the integral dues.

ART. 117. There will be imposed a fine of 2,000 francs—

1. For every clandestine deposit in any place whatsoever of a helm, a worm, a column, a retort, or other utensils which may serve for distilling, or a set of distillery apparatuses in nonactivity which do not bear any trace of recent operation. Furthermore, these utensils will be confiscated.

2. For refusing to open, on demand of the employees, the discharging faucet of the distilling or rectifying apparatus.

3. For every contravention of the measures taken for the execution of articles 63 and 146.

ART. 118. Every omission of entry in the required moment upon the register of the operation journal prescribed by article 43, and every inexact, effaced, or rectified entry, if the change has not been duly approved, will be punished with a fine graded as follows:

1. One hundred francs if connected with the declaration of the quantity or of the species of the first materials.

2. Five hundred francs if connected with the putting materials into maceration or into distillation, or the delay of declaration of the output.

ART. 119. Every increase, after the cooling or the dilution, of the density of the materials contained in the fermentation vats will be followed, when this increase exceeds one-half degree of the density and does not exceed 1 degree, by a fine of 20 francs for each hectoliter of the contents of the vats where the materials are found.

The fine will be increased by 10 francs per hectoliter for every degree or fraction of a degree of density stated in addition.

ART. 120. SEC. 1. When the net output stated by the agents of the administration by virtue of article 78 will be higher by 5 per cent at least than the output declared in the register of the operation journal the distiller will be punished with a fine of 10 francs per hectoliter of the contents of the fermentation vat.

SEC. 2. The fine will be doubled when the excess is proved to be 10 per cent or more.

SEC. 3. These fines will be incurred for every vat where the differences are stated.

ART. 121. When the highest product spoken of in sec. 2, of article 59, exceeds by 15 per cent at least the total quantity of spirits which corresponds with the output declared in conformity to article 41, fourth, the distiller will incur a fine of 10 francs per hectoliter or fraction of a hectoliter stated in addition.

ART. 122. The distiller who refuses to submit, at the invitation made by the employees in conformity to article 34, for permission to proceed to the contreverification by wet measure of the capacity of the fermentation vats, the measuring vessels, or the counters, will incur a fine of 5 francs per hectoliter of the contents in the whole set of utensils existing in the distillery.

ART. 123. Every defraudation or attempt at defraudation of the excise on the spirits produced or to be produced, and every act of fraud or attempted fraud in the material for fabrication of spirits, will be punished by a gradual fine, as follows: 5,000 francs, if the total contents of the utensils in the plants is less than 40 hectoliters; 10,000 francs, if the contents is of 40 to 100 hectoliters, exclusively; 15,000 francs, if it is of 100 to 200 hectoliters, exclusively; 20,000 francs, if it is 200 to 300 hectoliters, exclusive; 25,000 francs, if it is 300 hectoliters or more.

ART. 124. The following facts will fall under the application of the penalty fixed by article 123:

1. Every operation of steeping, of maceration, of fermentation, of distillation, or rectification, without declaration, the same as every extraction of alcohol from the residues.

2. Every deposit, other than into the vessels designated for this use, either of materials steeped, macerated, fermented or in fermentation, or of a liquid containing one or several characteristic elements of ripe materials fermented or in fermentation, such as alcohol, organized starch (amylum), active diastase, or alive yeast.

3. The introduction of these materials into the plant.

4. The removal of these materials from the plant to be sent outside, or for being used in rooms or apparatuses not declared.

5. The clandestine existence in a distillery or its dependencies of pipes, vats, boilers, or other vessels whatsoever which are adapted to the conduction, to the preparation, or the distillation of the materials.

6. Every clandestine deposit, in whatsoever place it may be, of a distilling apparatus or utensil which will bear the traces of recent work.

7. The turning off of alcoholic vapors, of sediments of spirits, or of alcohol before the regular taking in charge, or before the expiration of the period declared for the statement of the output.

8. Every act of contravention of the articles concerning the reunion

of the products of the distillation in the measuring vessels or in the counters.

9. Every infringement of the safety measures prescribed by the minister of finances to ascertain the discharge of the sediments or alcohols into the measuring vessels or into the counters.

10. Every change of the alcoholic degree of the sediments or the alcohols by priming the materials, by introducing a strange substance into the sediments or alcohols, or by any other manipulation.

11. Every change made in capacity of the measuring vessels or the counters or in the indication of the gauging scale of these vessels.

12. Every manipulation of a nature to derange the regular function of the counter.

13. Every breaking of seals, leads, chains, or other appliances of safety applied in virtue of the regulations of the present law or the instructions by the minister of finances, on the blow-off cock of the fermentation vats, the conduits of the materials, the vapors, the sediments or the alcohols on the distilling apparatus, the coolers of the distilling apparatus, the counters, the measuring vessels, or on the special locality where these latter are to be found.

14. The refusing to let the employees of the administration enter the establishment or the various localities or dependencies of the plant.

15. The refusing to permit the employees provided with a special authorization of an official having at least the degree of inspector, to take apart or to cause to be taken apart the one or the other of these apparatuses, pipes, or utensils the use or destination of which is not justified.

16. The refusing to permit statement of the output of the fermented materials contained in the vats or the volume and the strength of the sediments or alcohols contained in the measuring vessels or in the counters.

17. Every other refusing of legal demands.

ART. 125. Independent of imprisonment of from one to two years, of the confiscation and eventual destruction of the utensils, also of the confiscation of the materials, sediments, or alcohols, which form the object of the fraud, the fine imposed by article 123 will be doubled if one or the other of the facts mentioned in the preceding article is carried on in a clandestine manufacture or when in legally established plants other than in the localities where the vessels mentioned in the declaration of operation are to be found.

ART. 126. SEC. 1. Every illicit employment of methylated alcohol or alcohol destined to be methylated for industrial purposes, and also every regeneration of methylated alcohol will be punished, with a fine equal to tenfold the excise dues accruing from the quantities of alcohol employed illicitly or regenerated.

SEC. 2. The existence of methylated alcohol or of one of the products named in sec. 3 of article 1 in the manufacture of liqueurs, fine liqueurs, or toilet waters will be punished by a fine of 1,000 to 5,000 francs.

ART. 127. Every contravention will be punished by a fine of from 1,000 to 5,000 francs—

A. Against measures taken either by the Government or by the minister of finances in executing the provisions of the present law, and not specially provided for in the preceding articles.

B. Against articles of the law which are not sanctioned by a special penalty.

ART. 128. Every defraudation of alcoholic liquid either in the public warehouses or at the time of the exportation with release from dues

will be punished with a fine of five times the dues on the deficiency, at the charge of the warehouse keeper or of the exporter.

ART. 129. SEC. 1. In case of a second infraction proved within three years, the penalties of fine and imprisonment provided in articles 112–128, 141, and 145 will be doubled even after the guilty party may have been allowed to compromise the consequences of the first minutes.

SEC. 2. If in the same period of time a third infraction is proved, the penalties of fine and imprisonment will be tripled.

ART. 130. In case of detection of a pipe or of a clandestine apparatus, the employees may search, even in the neighboring buildings, for the vessel into which this pipe or this apparatus runs. If this search has no result the damages that such search may have caused will be repaired at the expense of the treasury.

ART. 131. SEC. 1. The distillers, rectifiers, liquorists, and manufacturers of fine liqueurs or of toilet waters will be responsible for the contraventions committed in their plants.

SEC. 2. The proprietors or renters will be responsible for contraventions detected in the buildings by them occupied, at least, if they fail to prove that they could not prevent or denounce the act.

ART. 132. Without prejudice to the dispositions in articles 59, 60, and 62 of the penal code, those who have been convicted of having taken part as persons interested in any manner whatsoever in a deed of fraud in an excise matter will be liable to the fines laid down against the principals. The condemnation to the fine and to the costs will always be pronounced against the delinquents and the accomplices collectively.

ART. 133. The minister of finances may not compromise the fines imposed for contravention against the present law when the acts have been perpetrated in a clandestine manufactory or when in legally established plants in localities other than where the vessels comprised in the declaration of operation are found.

ART. 134. By extension of the dispositions of art. 200 of the general law of the 26th of August, 1822, the visitation of the buildings and enclosures of private persons may, by means of the authority of a justice of the peace, take place at any hour of the day or night in case of suspicion of clandestine distillation.

ART. 135. The administrations of railroads, tramways, steamboats, or other services of mercantile transportation must, when they have been requested thereto by an official of the administration of direct contributions, custom-houses, or excises, having at least the degree of inspector (contrôleur), furnish all the proper documents (renseignments) leading to the discovery of the frauds in distillery matters. They will be especially bound to give notice of sendings of sediments, alcohols, molasses, lees, or other materials used in distilleries; for that purpose they must, if need be, place their books of dispatch at the disposition of the requesting official.

ART. 136. If a distiller works without having paid or secured the dues, or if he is constituted as a contravenient for an act falling under the application of article 124, Nos. 1 to 6, then the minister of finances, if he deems it necessary for the surety of payment of the dues due or of the fines incurred, may seize and have removed, by virtue of an order by the president of the tribunal, all the utensils and vessels of the plant.

ART. 137. SEC. 1. Article 505 of the penal code will be applicable to each distiller, rectifier, dealer, liquoriste, or manufacturer of fine liqueurs or toilet waters who has secreted spirits, liqueurs, or other

alcoholic liquids that have been fraudulently imported or came forth from a clandestine manufactory.

SEC. 2. There will be punished with fines and penalties of imprisonment, provided by the same article, those who have been convicted of having bought spirits, liquors, or other alcoholic liquids coming, to their knowledge, from a distillery not declared, or who have effectuated a similar purchase of domestic or foreign liquids under such conditions as ought to have suggested the existence of some fraud.

ART. 138. The second alinea of article 20 of the law of April 6, 1843, relating to the preventive arrest of persons committing fraud in custom matters, will be rendered applicable upon the authors of frauds committed in a clandestine distillery, which have the penalty of imprisonment for their consequence.

ART. 139. SEC. 1. The persons denominated in article 231 of the general law of August 26, 1822, who bribe or attempt to bribe an employee of the administration, either directly, or through the mediation of one of their agents, or of a third person, will be liable, besides the penalties declared by article 252 of the penal code, to a fine of 10,000 francs, such fine to go to the benefit of the treasury.

SEC. 2. This fine will be doubled in case of a second infringement proved within three years, even after the guilty party shall have been allowed to compromise the consequences of the first proceedings.

SEC. 3. The provisions of articles 229 and 231 of the before-cited general law will be applicable, if the case should arise, to the fines imposed by the present article.

ART. 140. The penalties provided in articles 112, 114, 115, Nos. 4, 5, 6, 7, 10, 11, 12; 116, Nos. 2, 3, and 6; 117, No. 2; 123 to 127, 129, 130, 133, and 136 of the present law will be applicable, if the case arises, upon infringements committed by the rectifiers or the liquoristes.

ART. 141 The differences, more or less, exceeding 5 per cent, established by the revisitations in virtue of sec. 2 of article 86, will render rectifiers liable to a fine equal to fivefold the amount of the excise, referring to quantities of alcohol found to be more or less.

ART. 142. Independent of the penalties provided by the articles 112 to 129 and by article 141, the payment of dues defrauded will always be collectible.

ART. 143. The dispositions of article 9, of the law of May 31, 1888, concerning conditional condemnation will not be applicable to the penalties provided by the present law.

CHAPTER X. *General provisions.*

ART. 144. The provisions of the general law of August 26, 1822, those of the law of April 6, 1843, relating to the suppression of fraud, those of the law of March 4, 1846, relating to warehouses, and those of the law of August 6, 1849, relating to the transit, modified by the laws of March 3, 1851, and of May 1, 1858, will be applicable upon distillers, upon rectifiers, upon wholesale dealers, upon liquoristes, and upon manufacturers of fine liqueurs and of toilet waters, as far as they have not been modified by the present law.

ART. 145. The rectifiers, the wholesale dealers, the liquoristes, and the manufacturers of fine liqueurs and of toilet waters will be bound to facilitate to the employees of the administration the exercise of their functions. For that purpose they must furnish everyone, in what concerns him, the means to operate the visitations, the verifications, and the gauging, in default of which he shall be fined 2,000 to 5,000 francs for the refusal of exercise.

ART. 146. SEC. 1. The Government will be authorized to take especial measures of surveillance (supervision) with the view of securing the receipt of dues on the manufactures of spirits.

SEC. 2. The minister of finances may grant especial facilities of operation to establishments of instruction or where distilling is taught.

ART. 147. The Government will be authorized to regulate, in the interest of the public health, the manufacturing or preparing of spirits, liqueurs, or other alcoholic liquids.

ART. 148. Each producer or seller of glucoses, sirups, or molasses will be bound to enter upon a register, day by day, the quantities sold, the name and address of the purchasers, as also of the consignees of the wares. Every transportation of products that may occur will be covered by a bill of lading, dated, signed, and declared exact by the consignor. This bill of lading will indicate the name and the domicil of the consignee, the nature of the wares, the number, the marks, and the numbers of the packages. It must be presented, whenever demanded, to the agents of the administration.

ART. 149. SEC. 1 The Government may subject to excise dues the domestic production of alcohols, of which section 3 of article 1 treats. There shall exist, between those excise dues and the entry dues on the same alcohols, a proportion equal to that existing between the excise dues on the domestic spirits and the entry dues on the "spirits of every kind in hoops," of 50 degees at the temperature of 15 degrees.

SEC. 2. The Government, if the case occurs, will resolve upon the measures of supervision and will be enabled to apply to these alcohols the provisions of the articles 13 to 16.

SEC. 3. The contravention of resolutions adopted for the execution of section 2 will make applicable the penalties sanctioned by the present law.

ART. 150. There will annually be made a report to the Chambers on the execution and the effects of the present law.

CHAPTER XI. *Transitory dispositions.*

ART. 151. The distiller, whose plant has been regularly declared before the 15th day of December, 1895, will have until the 31st day of December, 1897, the choice to operate either according to the system of the impost upon the output regulated by the present law, or according to the provisions of the law of the 18th day of July, 1887, completed or modified by the terms of the articles 152 to 157 of the present chapter. These later articles will cease to be in force on the 1st day of January, 1898.

ART. 152. It will be prohibited to operate simultaneously in the same inclosure of the distillery, under the régime (rule) of the impost upon the contents, and under the régime (rule) of the impost upon the output.

ART. 153. The reduction of 15 per cent granted by section 1 of article 19 of the law of July 18, 1887, must not exceed 10 centimes per liter of sediments of 50 degrees, at the temperature of 15 degrees, subject to the impost.

ART. 154. The eleventh category of the fifth species of first materials, of which article 7 of the law of July 18, 1887, treats, will be modified as follows:

	Dues (work in 24 hours).
	Francs.
Eleventh category: Dry fruits, sirups, or sugars; saccharated juices with one or more feculent or saccharine substances	15.10
Eleventh category: Molasses	12.58

ART. 155. SEC. 1. If it shall be stated that the medium output obtained in the distilleries of molasses shall exceed the legal output by more than 3 per cent, then the Government may, in the course of one campaign, increase the taxes of the excise to cover the excess of the output known or acknowledged.

SEC. 2. It will be the same in case of the use of materials that have not been worked in the distillery during at least ninety days of the preceding campaign.

SEC. 3. Always, by application of article 9 of the law of July 18, 1887, the tax of the dues will be fixed anew, at the end of the campaign, according to the average of the outputs stated during the same.

ART. 156. SEC. 1. The No. 31, lit. B, of article 161, sec. 1, of the law of July 18, 1887, will be suppressed and replaced by No. 2 of article 124 of the present law.

SEC. 2. The contraventions against No. 2 of article 124, cited above, will be punished, in so far as distillers are concerned who operate under the rule of the law of July 18, 1887, by the penalties provided in the three last alinéas of No. 31 of article 161, sec. 1, of the latter law.

ART. 157. The terms of the present law that are not contrary to those of the law of July 18, 1887, maintained by article 160 of this act, will be rendered applicable to the distillers who operate under the rule of tax upon the contents.

ART. 158. At the date that will be fixed by the Government for carrying into effect the present law the rectifiers will formulate an inventory in double issue, certified as exact, of the quantities of sediments and of alcohols found in their magazines. This inventory will indicate the volume and the strength of the alcoholic liquids and will mention the recipients that contain them. The total quantity will be entered upon the registers mentioned in article 85.

ART. 159. SEC. 1. There will be granted to the agricultural distillers operating under the rule of article 7 a delay to June 30, 1897, for the purpose of providing themselves with arable land, the culture of which has been imposed upon them.

SEC. 2. There will be granted to the agricultural distillers, who renounce the rule of article 7, a delay to December, 1901, for the purpose of providing themselves with the extent of cultivation specified in article 6. Until the expiration of that delay, they will be bound to do justice to the extent of arable land specified in sec. 2 of article 7.

CHAPTER XII. *Abrogation of previous provisions.*

PUTTING INTO EXECUTION OF THE LAW.

ART. 160. There will be abrogated—

1. From the putting into execution of the present law—

A. The disposition of article 1 of the law of April 16, 1887, on sugars and that provision of the official tariff of customs which permits the free entry of sirups and molasses imported for distillation.

B. Article 2 of the budget law of December 30, 1889.

C. The law of July 18, 1887, on the manufacture of spirits, excepting articles 4 to 14, 16, 19, lit. A, B, and C of sec. 1, and Nos. 1 and 4 of sec. 2, articles 26, 28, 30, 32, 35, 38 to 40, 42 to 61, 63, 67, 71 to 74, 77 to 108, 120 to 125, 132, 157, of article 161, sec. 1, Nos. 1, 2, 4, 5, 8, 11, 16, 18 to 22, 24, 26, 27, 29, 30, 31, lit. A, C, D, and F, 32 to 34 of secs. 3 and 5 of the same article, and of articles 164, 172, and 173.

2. From the first day of January, 1898, on the provisions of the law of July 18, 1887, enumerated under lit. C, above.

ART. 161. The Government will fix the date of the putting into execution of the present law.

We promulgate the present law, and order that it be covered by the seal of the State, and published by the Moniteur.

LEOPOLD.

By the King:

The Minister of Finances,
P. DE SMET DE NAEYER.

No. 2367.

EXCISES.

EXECUTION OF THE LAW OF APRIL 15, 1896, RELATING TO THE MANUFACTURE AND IMPORTATION OF THE ALCOHOLS.

LAEKEN, *15th of June, 1896.*

Leopold II, King of the Belgians, to all present and to come, greeting:

Having examined the law of April 15, 1896, relating to the manufacture and importation of alcohols;

Having examined article 161 of the same law worded thus: "The Government will fix the date of the putting in execution of the present law;"

Having heard that it is important in the interest of industry, and also of hygiene to put into execution without delay, certain dispositions of the before-cited law of April 15, 1896, notably those concerning the discharge of the excise on alcohol destined for industrial usages, also the inspection of distilleries and manufactories of liqueurs;

On the proposition of our minister of finances, we have resolved and we do resolve:

Only article.—The articles 13–16, 72, 88, 96, sec. 1, litt. *e*, 126, 127, 134, 142, 144, 145, 148, 153, and 160, 1 litt. *a*, are rendered applicable beginning from June 19, 1896.

Our minister of finances is charged with the execution of the present resolution.

LEOPOLD.

By the King:

P. DE SMET DE NAEYER,
The Minister of Finances.

No. 2366.

EXCISES.

LAW BEARING MODIFICATION OF THE ENTRY-DUES AND OF THE MANUFACTURE OF ALCOHOLIC LIQUIDS. (1.)

LAEKEN, *June 17, 1896.*

Leopold II, King of the Belgians, to all present and to come, greeting:

The Chambers have adopted and we sanction the following:

ART. 1. SEC. 1. The entry dues on alcoholic liquids, distilled abroad, and on nutritious preserves made up with spirits are modified in the following manner:

	Per hectoliter.
Spirits of every kind:	
In hoops, of 50 degrees at least of the alcoholometer of Gay-Lussac, at the temperature of 15 degrees of the centigrade thermometer	*Francs.* 150
In hoops, for each degree more than 50	3
In bottles, without distinction of degree	300
Liqueurs, without distinction of degree	300

[Session of 1895-1896: House of Representatives—Parliamentary Documents and Annals—Exposé of the motives and text of the drafted bill. Report and discussion. Session of June 16, 1896. Senate—Parliamentary Documents and Annals.—Bill adopted by the House of Representatives. Report and discussion. Session of June 17, 1896.]

		Francs.
Other alcoholic liquids	per hectoliter	200
Nutritious preserves prepared with spirits	per 100 kilograms	120

SEC. 2. All the spirits which have been submitted to any kind of preparation will be considered as liqueurs. Prepared spirits, other than preparations with absinth, imported otherwise than in bottles, the real alcoholic strength of which is not superior more than 2 degrees to the apparent alcoholic strength, may be admitted to the rule of "spirits of every kind in hoops," provided the importer declares, besides the apparent degree, the real degree which degree will serve as a base in the calculation of the dues.

SEC. 3. The methylene and the methylated alcohol, the amylic alcohol, as also the homologous alcohols, will be assimilated to the "other alcoholic liquids." It will be the same with preparations containing products of common alcohol, and which do not serve as beverages, the alcoholic perfumeries being excepted.

SEC. 4. The entry dues on "spirits of every kind in hoops" will be calculated by degree and by tenth of a degree; the fractions lower than a tenth will be set aside.

ART. 2. SEC. 1. The excise dues on the manufacture of spirits will be established as following for the different categories of materials:

Kinds of first materials.	Categories.	Designation of first materials.	Dues. Work in 24 hours.	Dues. Work in 48 hours.
			Francs.	*Francs.*
First species	1	Flours not sifted coming solely from barley malt, rye, common barley, oats, not having undergone before being put into maceration any preparation, grinding excepted. Without the use of a macerator and when the totality of feculent materials put into maceration— Not exceeding 10 hektoliters per 24 hours of work, or 20 hectoliters per 48 hours	17.44	19.50
	2	Flours not sifted coming solely from barley malt, rye, common barley, oats, not having undergone before being put into maceration any preparation, grinding excepted. Without the use of a macerator and when the totality of feculent materials put into maceration— Exceeding 10 hectoliters and not exceeding 20 hectoliters per 24 hours of work, or exceeding 20 and not exceeding 40 hectoliters per 48 hours	19.53	21.17
	3	Flours not sifted coming solely from barley malt, rye, common barley, oats, not having undergone before being put into maceration any preparation, grinding excepted. With the use of a macerator or when the totality of the feculent matters put into maceration will exceed 20 hectoliters per 24 hours of work or 40 hectoliters per 48 hours	20.50	22.72
	4	Potatoes	14.22	15.15
Second species	5	Use, independent of barley malt, of grains, or corns other than rye, common barley, or oats, not having undergone, after being put into maceration, any preparation, the grinding excepted	22.28	25.31
Third species	6	Sifted flours	22.28	25.86
Fourth species	7	Jerusalem artichokes or juice of tobinambour in the natural state	17.50	25.86
	8	Beets or juice of beets in the natural state	13.12	25.86
Fifth species	9	Juice of artichokes in concentrated state	21.72	25.86
	10	Juice of beets in concentrated state	27.10	25.86
	11	Dry fruits, sirups, or sugars, juices sugared with one or more feculent or saccharine substances	23.60	25.86
	11a	Molasses	19.66	25.86
Sixth species	12	Kernel and stone fruits	5.86	25.86

SEC. 2. The new excise dues fixed by the first section will be applicable to the operations of manufacture performed from the day on when the present law becomes obligatory. The declarations of operation in course of being executed will cease at midnight. The minister may

designated in secs. 1 and 3 of article 1 shall be covered by a document of the custom-house or excise.

ART. 110. The document delivered for liquids charged with impost according to their alcoholic strength will serve to cover the deposit of liqueurs if it is provided with a certificate of the official stating that the detainor has declared his willingness to convert into liqueurs the quantities mentioned in the document.

ART. 111. SEC. 1. The deposit of the spirits will not be validly justified by documents indicating an alcoholic strength inferior to that of the warehoused quantities.

SEC. 2. When the detainor desires to augment the degree of strength of the liquids in the magazine by the admixture of other spirits he will make the declaration thereof in advance to the official, and will proceed with the operation in the presence of the agents of the administration, who will state the result thereof on the back of the documents. The official will withdraw the first documents and will deliver a new one which states the quantities and the degree obtained by means of the admixture.

CHAPTER IX. *Penalties.*

ART. 112. There will be incurred a fine of 25 francs—

1. For lack of the writing desk mentioned in art. 23, or of a bell at the principal entrance to the establishment, if the desk or the bell are not put up within forty eight hours of the first written advertisement given by the official of excise of the place.

2. For the nonreproduction or the displacement of a vessel or utensil.

3. For the use of a vessel not bearing the indications prescribed by art. 36.

4. For the nonreproduction of the full copy of the declaration of operation.

5. For the default of a notice or a belated notice of the suspension or the cessation of operations.

ART. 113. There will be incurred a fine of 100 francs—

1. For all maceration begun too early or too late for more than an hour beyond the hour mentioned for operation in the register of the operation journal.

2. For the altering or not immediately presenting the register of the densities prescribed by art. 44.

3. For every inexact declaration of the density of the materials; the same for default of declaration of this density at the fixed hours.

ART. 114. A fine of 200 francs will be imposed—

1. For the breaking or altering of the seals put upon utensils or pipes other than those mentioned in articles 30 and 31.

2. For the nonreproduction of one of the sealed pieces, spoken of in section 1 of this article.

ART. 115. A fine of 500 francs will be imposed—

1. For augmentation of the capacity of the fermentation vats, if the contre-verification foreseen by article 34 shows a capacity superior to 2 per cent or more than that which is mentioned in the latest minutes of gauging.

2. For having, without previous declaration, taken down, repaired, or otherwise changed the capacity of vessels other than the counters and the vessel measurers recorded in the minutes of gauging.

3. For having substituted for the gauged vats other vats or vessels of greater dimensions.

4. For every sale, cession, or loan of utensils without declaration.

alcohol at 50 degrees of the alcoholometer of Gay-Lussac, at the temperature of 15 degrees of the thermometer of 100 degrees, will be provisorily fixed at 36 francs on alcohol destined after methylation to be converted into vinegar, and at 64 francs on the alcohol destined after methylation for other industrial purposes except heating and lighting.

Our minister of finances is charged with the execution of the present decree, which will be put into force from June 22, 1896.

LEOPOLD.

By the King:

The Minister of Finances,
P. DE SMET DE NAEYER.

ADVICE.

The industrials wishing to obtain the discharge of the dues on methylated alcohol employed in their industry shall address, for this purpose, the minister of finances, who, upon the terms of articles 15 and 16 of the law of April 15, 1896, will pass an order covering each demand, and will determine the process of methylation, as also the conditions and formalities to which the octroi of discharge is subjected.

[Ministry of finances.—Administration of direct contributions, customs, and excises.]

No. 22947.

EXCISES.

TEMPORARY MEASURES.—OBJECT: PROVISORY INSTRUCTION RELATING TO THE METHYLATION OF ALCOHOLS USED IN CERTAIN INDUSTRIES.

BRUSSELS, *June 22, 1896.*

SEC. 1. The distiller who furnishes the sediments or the alcohols will take out a bonded pass bill No. 132 in the office of the excise official of the place.

This document will clearly indicate—

1. The name, the profession, and the residence of the consignee.
2. The quantity and the real strength of the sediments or alcohols at the temperature of 15 degrees of a thermometer and 100 degrees proof.
3. The quantity of the same sediments or alcohols gathered by means of the tables of reduction at the strength of 50 degrees of the alcoholometer of Gay-Lussac.

SEC. 2. Before the removal of sediments or alcohols from the distillery, the clerks of excise of the section will assure themselves of the exactitude of the statements of the bonded pass bill as far as concerns the declared quantities; they will sign the result of their verification on the pass bill.

SEC. 3. On arrival of the shipment the consignee will inform the clerks of the excise of the section, who will proceed immediately to the inspection of the merchandise. The sediments or alcohols will then be methylated in the presence of the employees, in the manner prescribed by the administration.

After their methylation the employees will state the quantity resulting from the operation; the products will then be deposited in a special magazine and must be presented to the agents of the administration at every requisition.

ART. 119. Every increase, after the cooling or the dilution, of the density of the materials contained in the fermentation vats will be followed, when this increase exceeds one-half degree of the density and does not exceed 1 degree, by a fine of 20 francs for each hectoliter of the contents of the vats where the materials are found.

The fine will be increased by 10 francs per hectoliter for every degree or fraction of a degree of density stated in addition.

ART. 120. SEC. 1. When the net output stated by the agents of the administration by virtue of article 78 will be higher by 5 per cent at least than the output declared in the register of the operation journal the distiller will be punished with a fine of 10 francs per hectoliter of the contents of the fermentation vat.

SEC. 2. The fine will be doubled when the excess is proved to be 10 per cent or more.

SEC. 3. These fines will be incurred for every vat where the differences are stated.

ART. 121. When the highest product spoken of in sec. 2, of article 59, exceeds by 15 per cent at least the total quantity of spirits which corresponds with the output declared in conformity to article 41, fourth, the distiller will incur a fine of 10 francs per hectoliter or fraction of a hectoliter stated in addition.

ART. 122. The distiller who refuses to submit, at the invitation made by the employees in conformity to article 34, for permission to proceed to the contreverification by wet measure of the capacity of the fermentation vats, the measuring vessels, or the counters, will incur a fine of 5 francs per hectoliter of the contents in the whole set of utensils existing in the distillery.

ART. 123. Every defraudation or attempt at defraudation of the excise on the spirits produced or to be produced, and every act of fraud or attempted fraud in the material for fabrication of spirits, will be punished by a gradual fine, as follows: 5,000 francs, if the total contents of the utensils in the plants is less than 40 hectoliters; 10,000 francs, if the contents is of 40 to 100 hectoliters, exclusively; 15,000 francs, if it is of 100 to 200 hectoliters, exclusively; 20,000 francs, if it is 200 to 300 hectoliters, exclusive; 25,000 francs, if it is 300 hectoliters or more.

ART. 124. The following facts will fall under the application of the penalty fixed by article 123:

1. Every operation of steeping, of maceration, of fermentation, of distillation, or rectification, without declaration, the same as every extraction of alcohol from the residues.

2. Every deposit, other than into the vessels designated for this use, either of materials steeped, macerated, fermented or in fermentation, or of a liquid containing one or several characteristic elements of ripe materials fermented or in fermentation, such as alcohol, organized starch (amylum), active diastase, or alive yeast.

3. The introduction of these materials into the plant.

4. The removal of these materials from the plant to be sent outside, or for being used in rooms or apparatuses not declared.

5. The clandestine existence in a distillery or its dependencies of pipes, ts, boilers, or other vessels whatsoever which are adapted to the con- ction, to the preparation, or the distillation of the materials.

6. Every clandestine deposit, in whatsoever place it may be, of a dis- ling apparatus or utensil which will bear the traces of recent work.

7. The turning off of alcoholic vapors, of sediments of spirits, or of the regular taking in charge, or before the expiration clared for the statement of the output.

of contravention of the articles concerning the reunion

§ 4. The duty on "spirits of all kinds in barrels" is calculated by the degree and one-tenth of a degree; fractions lower than one-tenth of a degree are neglected.

ART. 2. The liquids designated under § 3 of article 1 may be admitted under total or partial exemption from import duty, upon conditions to be determined by the minister of finances, when they are intended exclusively for industrial uses.

* * * * * * *

TOTAL OR PARTIAL REMISSION OF EXCISE ON ALCOHOL INTENDED FOR THE ARTS.

ART. 13. A total or partial remission of tax may be granted, after previous methylation, on alcohol intended exclusively for industrial uses, including heating and lighting.

ART. 14. § 1. The Government determines the amount of remission according to the nature of the industry.

§ 2. The Government is authorized to establish a special tax, for the benefit of the State, in compensation of such expenses of methylation and inspection as may arise.

ART. 15. The minister of finances determines—

1. The processes of methylation.
2. The nature and proportion of the substances intended to render alcohol unsuitable for human consumption.
3. The conditions and formalities to which the granting of the remission is subject.

ART. 16. The minister decides on every application. The permits granted are withdrawn in case of abuse without interfering with the penalties incurred.

EXEMPTIONS FROM EXCISE.

ART. 17. The rectification of low wines or alcohols is not subject to any excise duty.

ART. 18. From the date of promulgation of the present law no rectifying factory shall be established except in the centers of arrondissements, in the groups of communes including a center of an arrondissement, or in localities permitted by the Government.

ART. 19. § 1. No excise duty is levied on the manufacture of liquors when they are prepared exclusively by means of alcohols and sugars or perfumes extracted from substances that can not produce alcohol.

§ 2. Neither is any excise tax imposed on manufacturers who confine themselves to extracting by distillation perfumes either from plants or strawberries, raspberries, or gooseberries.

The minister of finances regulates the conditions to which the work of these manufacturers is subject.

[Ministry of finance.—Administration of direct taxes, customs, and excise.]

EXCISE.

No. ———.

OBJECT: METHYLATION OF ALCOHOLS USED IN THE MANUFACTURE OF VARNISH—ANNEX —.

BRUSSELS, ———, *189–*.

SIR: M—. ——— ——— request– permission to methylate in ——— factory, under exemption from excise duties, the alcohol intended for the manufacture of varnish.

I accede to this request under the following conditions:

a. The minimum quantity of low wine or alcohol to be introduced in the factory is fixed at 2 hectoliters at 50 degrees of the Gay-Lussac alcoholometer, at the temperature of 15 degrees centigrade.

b. The methylation shall be effected by adding to every hectoliter of alcohol at 94 degrees or more—

1. Ten per cent of methylene containing about 5 per cent acetone; and

2. Twenty-five per cent of varnish containing 30 per cent of shellac or other resin.

c. The presence of any distilling or rectifying apparatus is forbidden within the enclosure of the factory.

d. At every operation of methylation the clerks of the excise will take a sample of the methylated alcohol of about 50 grams, which they will send directly to Mr. Bruylants, chemist of the department of taxes at Louvain.

To the director of taxes.

The petitioner, ——— ———, is moreover bound to conform to the provisions of the instruction of June 22, 1896, No. 22917 (temporary measures).

..... The present permit is granted provisionally, and will be immediately withdrawn in case of abuse, independ-
at
..... ently of any penalties that may be incurred.

Manufacture of collodion ——— at least 50 per cent of ether.

Hat making ——— 10 per cent of methylene containing 5 per cent of acetone and 25 per cent of a strong varnish containing 30 per cent of shellac.

Fulminate of mercury for cartridges, 10 per cent of the neutralized ethereal liquids produced by the action of nitrate of mercury on alcohol.

Aniline dyes, ——— 10 per cent methylene containing 5 per cent of acetone and 25 grams of fuchsine or any other aniline color.

[Ministry of finance.—Administration of direct taxes, customs, and excise.—Very urgent.]

EXCISE.

No. ———.

OBJECT: METHYLATION OF ALCOHOL USED IN VINEGAR WORKS—ANNEX —.

BRUSSELS, ———, *189–*.

SIR: M—. ——— ———, manufacturer– of vinegar at ———, request– to be allowed to methylate in ——— factory, under exemption from excise duty, alcohols intended to be converted into vinegar.

I accede to this request under the following conditions:

1. The minimum amount of low wine or alcohol to be introduced into the vinegar works is fixed at 2 hectoliters at 50 degrees of the Gay-Lussac alcoholometer, at the temperature of 15 degrees centigrade.

2. The methylation is to be effected by adding to every hectoliter of alcohol at 94 degrees 300 liters of water and 100 liters of vinegar at least 8 per cent in strength.

If the strength of the low wines or alcohol is less than 94 degrees, the quantity of water to be added thereto is to be proportionately reduced.

3. The presence of any distilling or rectifying apparatus is forbidden *within* the enclosure of the vinegar works.

The petitioner, ——— ———, is moreover bound to conform to the provisions of the instruction of June 22, 1896, No. 22917 (temporary measures).

To the director of taxes.

Mr. .....

at .....

The present authorization is granted provisionally, and will be at once withdrawn in case of abuse, independently of the penalties incurred.

In view of the urgency, the above-mentioned instruction and a copy of the present one have been sent directly to the person concerned.

Please bring the above matters to the notice of the functionaries and employees whom it concerns.

For the minister of finance:

THE DIRECTOR-GENERAL.

[No. 259.]

BELGIAN REPORT ON LAWS RELATING TO DISTILLED SPIRITS.

[Chamber of Representatives.—Session of July 4, 1895.]

BILL RELATING TO THE MANUFACTURE AND IMPORTATION OF ALCOHOL.

Report made, in the name of the Commission, by Mr. Tack.

GENTLEMEN: The bill on which you are to deliberate introduces a new method of levying imposts on the manufacture of spirits, and at the same time it harmonizes the impost duties with this new method.

The existing legislation bases the impost on the capacity of the vessels used in the manipulation of the distilling material.

The levying of the excise according to the capacity of the vats containing the raw material is replaced by the present law of an impost on the output, which is evidently more rational and just.

This reform had long been demanded; it has been adopted almost all over Europe, and it seems that wherever the output has been adopted as basis of impost the result obtained is the subject of congratulation.

If Belgium is in this respect behind other nations, it is not so much by reason of any doubt that might have been entertained regarding the excellency of the principle considered in itself as because of the difficulties that it was thought would arise from its application, because of the fear, in a manner inborn, in our population, of the reintroduction of the inspection, which is so repugnant to them, and also because agricultural distillers had for a while feared that a change in the mode of levying the tax might be their ruin.

This triple apprehension has now been dissipated, owing to the improvements which science has made in the controlling apparatus, the methods of surveillance discovered by practice, and finally, the combination which the department of finances has been able to make in order to avoid the inspection while safeguarding the interests of the treasury. It is well known that the inspection, properly so called, does not confine itself to superintendence in the factory, but extends beyond the factory to the transportation and sale of the product and even to the dwelling of the retail seller.

Such intrusion can never become naturalized in our country, and will always be regarded by our people as vexatious, contrary to our customs, and as an attempt upon our old habits.

Accordingly no such inspection is in any way contemplated in this bill. On the contrary, the administration has been careful to avoid offending the susceptibilities of the taxpayers. It had in mind the unpopularity which the inspection to which distilleries were subjected before 1830 had caused the Government to incur in the minds of the Belgians. It must be confessed that the administration has succeeded in accomplishing the task which it had undertaken, and which was by no means an easy one.

The commission of 1884, established by Mr. Graux to study the question, had pronounced in favor of the status quo; after this opinion the Government could do nothing but introduce in the legislation certain improvements pointed out by the commission; hence the laws of 1884 and 1886, which authorized, under certain conditions, work of twenty-four hours, adopted the liberty left to agricultural distillers to distil 20 hectoliters of material per day; they granted relief as regards the conditions of cultivation and authorized the Government to redress periodically the anomalies of taxpaying.

These modifications were soon declared insufficient. In general, more complete and radical reforms were demanded; a revolution seemed to have taken place in favor of the method of taxing by output, and this even among several of those who had shown themselves most hostile to that method.

The legislation on spirits had, moreover, aroused frequent criticisms within the Chambers. In brief, revision was manifestly in the air.

This led Mr. Beernaert to consult the interested parties repeatedly, and this he did in proposing to the King on October 20, 1893, to have a new examination undertaken. A royal decree carrying out this proposition and instituting a consultative commission composed of 26 members soon appeared, dated October 25 following; it included the most competent men, chosen from among large and small distillers; there were also among them the members of the Chamber who had occupied themselves with the solution of the problem, and the most competent officials of the department of finances. The commission held 13 well-attended meetings, in which it elucidated numerous controverted points, and finally it passed a resolution by 10 votes against 8, and 7 not voting, replying in the affirmative to the question, "whether it was advisable in the matter of imposts on spirits to substitute a tax on the real output, without inspection, for the tax on the contents of the vats."

These were the identical terms in which the question had been put.

The commission on distilleries, as it was called, also replied in the affirmative, by 14 votes against 4, and 1 not voting, to the following question—

Is there any ground for giving permission to manufacture yeast?

On the question—

Is there any ground for diminishing the reduction of 15 per cent which agricultural distillers now enjoy?

the reply was negative.

Fourteen members voted in the negative; four in the affirmative; seven declared that they would abstain from voting.

The following question was decided in the affirmative by 17 votes against 1, and 7 not voting:

Is it possible, in the present state of science, without prejudice to the interests of the treasury, to authorize the methylation of alcohol destined for the manufacture of vinegar, they being exempt from impost?

On the question "whether the methylation of alcohol intended for use in industry would be advantageous from a hygienic standpoint" the commission voted in the negative by 1 vote against 7, and 17 abstaining.

These votes on the principle and these answers of questions guided the Government in drafting the bill now before the Chamber.

It will not be superfluous to sum up in a few words the legal provisions that relate to the methods now in use and those which are to be substituted for them.

PRESENT LEGISLATION.

The tax is assessed on the contents of the vats containing the fermenting material; consequently it is levied on a fixed quantity of raw material—rye, barley, malt, maize, beets, molasses, starch derived from potatoes and Jerusalem artichokes, seed fruit, and kernel fruit.

The law, by virtue of a legal presumption, fixes the presumed output, which varies according to the fermenting material.

The presumption was on the principle of seven liters of alcohol, at 50 degrees of the Gay-Lussac alcoholometer, per hectoliter of raw material taxed. This has commonly been called the legal output. Some such unit had to be established to ascertain the drawback.

Owing to the progress of science the real output steadily rose, obliging the Government to take measures to bring it nearer the real output.

A royal decree of June 20, 1869, ordered an inquiry to be made in order to restore the truth of the facts.

As a result of these studies, an annual revision of the rate of output was decreed. This was equivalent to the inauguration, on a small scale, of the system of tax on output; or, if you wish, it meant grafting an incomplete system of tax on output on the system of tax on the capacity of the raw material vats—a hybrid system which was sure to go to pieces some day, both by reason of its complexity and by reason of the unequal treatment of the taxpayers to which it gave rise. No matter how carefully this periodical readjustment was made, it could only result in averages.

By the terms of the present law, the duty is uniformly 0.64 franc per liter of alcohol assumed to be produced, but the rating by hectoliters of the capacity of the vats varies according to the assumed output of the raw material used.

One of the most prominent features of the present method is the granting of a reduction of 15 per cent to agricultural distilleries. This reduction of tax is the apple of discord over which agricultural and industrial distillers fight, and this struggle threatens to become interminable, for it revived recently, and it reopened quite sharply over the bill in question.

The new legislation which the Government intends to substitute for that whose principal features we have just sketched frankly introduces into the law the principle of a tax on the output from the raw material macerated; it maintains the reduction of 15 per cent in favor of agricultural distilleries, as well as the rate of excise; it is the reality replacing a fiction; an equitable distribution of the tax among all.

The most serious objections that have been raised against the system now in operation are those set forth in the argument:

The instability of legislation.

The restriction of the liberty of manufacturers.

The impossibility of making yeast.

The waste of raw material.

The increase of the cost of manufacture.

The onerous conditions for the use of indigenous cereals.

The inequality in taxpaying.

The hindrance placed in the way of the adoption of new methods of manufacture.

It must be admitted that the present bill in large measure does away with these defects of the existing law. Without having recourse to surveillance, it places in the hands of the administration of finances sufficient means of control, which the argument enumerates, and which are as follows:

The verification of the raw material declared.

The ascertainment of the densities.

The verification, by means of the test retort, of the alcohol output declared by the distiller.

The indications of the counter and those of the measuring vessel.

It is impossible to point out anything vexatious in these methods of verification, which are analogous to those applied to breweries.

One may even say that they are simplified as compared to those now in use. Possibly, however, certain formalities may be deemed superfluous. This we will examine farther on.

In the presence of these facts one might be tempted to think that the new system, from the very fact that it does away with a number of well-known inconveniences and introduces incontestable improvements on present legislation, would be gladly received everywhere, and would neither encounter resistance nor arouse objections. This is not quite the case, as will be seen by the observations made before the special commission which you have appointed and in the petitions addressed to the Chamber since the bill was introduced. These observations, and these petitions, for that matter, are but the reflection of the discussions held in the commission on distilleries appointed by Mr. Beernaert in November, 1893; they turn almost exclusively on the deduction of 15 per cent stipulated in favor of agricultural distilleries (article 7, § 1).

Agricultural distilleries are defined in article 7 of the bill, which reads as follows:

§ 2. By agricultural distilleries are understood—

A. Those which use their residue from distillation to feed stock belonging to them and kept by them within the enclosure of their factory, and who furthermore satisfy the following conditions:

1. To feed within the enclosure of the distillery and throughout the duration of the work, either 3 head of large stock (not including horses) or 12 hogs or 24 sheep for every hectoliter of spirits, at 50 degrees at the temperature of 15 degrees Centigrade, entered within twenty-four hours.

2. To cultivate for themselves, within a radius of 5 kilometers from the factory, 3 hectares of arable land, vegetable gardens, or meadows, and this also for every hectoliter of spirits produced under the conditions above indicated.

B. Those who distil seed fruit and kernel fruit of their own harvesting.

C. Cultivators associated under a cooperative form for running a distillery.

The minister of finance determines the conditions to which these associations have to submit.

§ 3. Those who use syrup, molasses, glucose, or wines, or who distil fruit imported from abroad, can in no case be considered agricultural distillers.

The provisions set forth in article 7 above originate in the same ideas as those which guided previous legislation. Their aim was to call forth and encourage the diffusion and the scattering of small distilleries throughout our country districts; to enable small cultivators to utilize industrially the product of the soil which they water with the sweat of their brow; to convert their products into meat, and to obtain at home the stable manure, the most useful and indispensable of all to cause the earth to bring forth fruit in abundance and to assure its fertility in a manner permanently.

The bill, without increasing the amount of 15 per cent forming the present reduction on the tax in favor of agricultural distilleries, nevertheless adds to the advantage which the present law concedes them. Among other things, the agricultural distiller has the right to transcribe to the account of a rectifying distiller the duties resulting from his declaration of work. Thus he obtains facilities for transforming a part of his crop into low wines to produce precious residues with which he may feed his stock.

Furthermore, he is authorized, if he finds it possible, to produce the yeast and leaven which he needs and which, under the present law, he is often obliged to obtain at great cost, paying heavy freight charges.

The tax on the output relieves him of the necessity of using none but rich grain coming from abroad, and enables him to work up his own cereals, even if they be of inferior quality.

If he finds it profitable he may hereafter use for distillation Jerusalem artichokes and potatoes, as the work on those products is no longer subject to any inconvenience.

The surveillance may be mitigated in virtue of a ministerial authorization in the small distilleries which produce not more than 2 hectoliters of low wine in the space of twenty-four hours.

These diverse advantages, which did not exist in the old law, will no doubt be greatly appreciated by the agricultural distillers. To enjoy them they will have to conform strictly to the law. Care will have to be taken to prevent the establishment of numerous industrial distilleries going under the name of pretended agricultural distilleries.

Accordingly, the bill provides for the checking of the abuses resulting from the concentration of several agricultural distilleries in one hand, from participation in the working or ownership of more than one establishment, in the sale of the products of these factories, or in the purchase or preparation of the raw material which they use. Similarly, the deduction of 15 per cent is not granted to distillers whose factories are managed by one and the same director, or in which the same workmen do the work alternately, nor to distillers who work industrially—that is to say, under the application of the whole duty in the course of the working season, namely, from the 1st of July of one year to the 30th of June of the next.

As in the past, the work of the agricultural distiller is limited. In regard to this, article 12 provides as follows:

> If it is ascertained that an agricultural distiller has produced on an average for each declaration of work and for every 24 hours more than 4 hectoliters of spirits of 50 degrees, at the temperature of 15 degrees Centigrade, or that in the course of the working season he has not complied with all the requirements, all the work done by him from the beginning of the working season shall be subject to the full duty, and this without interfering with the penalties incurred.

While the defenders of the interests of large distilleries oppose the principle of the reduction of 15 per cent and demand that it be suppressed, those who plead the cause of the agricultural distillers maintain that the reduction of tax granted to agricultural distillers is insufficient and ought to be increased.

Only on that condition, they say, can agricultural establishments subsist.

Both these pretensions have found utterance in your commission.

The partisans of the large distilleries base their reasoning mainly on the following considerations:

Every distillery of spirits is in fact agricultural; the raw material which it uses comes directly from the land, and the residues return thither.

Most of the distilleries are located in the country. As regards the large or small distilleries located in towns, their by-products are sold to the farmers, market gardeners, and dairymen; they serve to feed their stock. A part of those residues is dried and may be shipped, when thus lessened in volume, to all the farmers of the country.

The manure of the stables is devoted to the fertilization of the land.

Under these circumstances one may say that the services rendered to agriculture by industrial distilleries are not less real than those of agricultural distilleries.

The distinction between industrial and agricultural distilleries has thus no base in fact.

It must be admitted that there is a basis of truth in the affirmation that, since industrial distilleries operate on larger quantities, their cost of production is less. But this is true of all industries, and yet no one has ever thought on this account of making a difference in the rate of tax, according to the greater or smaller capital invested, or according to the degree of intelligence of the manufacturer.

The principle of the reduction to the amount of 15 per cent is all the less justifiable, because, as in the future the tax is to be levied on the output, the burden is proportionately the same for all.

On an average 232 distilleries were at work during the decade from 1890 to 1891. They worked up a total amount of 423,972 hectoliters of dutiable material at the duty of 11 to 80 francs. The amount of the duty collected on that amount was 5,002,940 francs, out of which the State returned, under the head of the reduction of 15 per cent, the sum of 750,441 francs, distributed among 232 manufacturers.

Suppose for a moment that as a consequence of the passage of the new law the number of agricultural distillers should quadruple; the loss of 750,441 francs suffered by the treasury will also be quadrupled, amounting to 3,001,774 francs.

This sum will benefit 928 cultivators; at the same time industrial distillation will have its production diminished by more than 500,000 hectoliters.

Will a compensation for this diminution be found in exportation, by reason of the new method? It is not apparent on what fact such a hope could be founded. Hereafter agricultural distillers will be able to use their own grain, which was hardly possible under the existing system; the calculations which the agricultural distillers produced to show that their cost of production is notably greater than that of industrial distillers are purely fanciful, since they involve omissions; for example, as regards the yeast which is left unnoticed, and also because the terms of comparison are ill chosen. It is even easy to prove that the distiller of grain has an advantage of 3.90 francs over the distiller of molasses.

Can the reduction of 15 per cent still be reasonably demanded in the presence of such facts? To say the least, agricultural distilleries ought to be restricted to the manufacture of low wines, which the distiller might sell to professional rectifiers. The latter would be closely watched in order to guarantee to the consumers the irreproachable character of the products offered them for sale.

The preceding considerations are amply set forth in a note drawn up by the minority of our commission, which note will be found in the appendix.

To the reasonings of the industrial distillers their competitors oppose others. They say that it is not only the greater freedom from tax that has enabled the large industrial distilleries to crush the agricultural distilleries and to reduce them to the number of 211, whereas formerly

they numbered 1,200; it is the work on a large scale of the industrial distilleries on the one hand and the limitation of work imposed on agricultural distilleries on the other hand that causes the latter to fall behind.

At first agricultural work was subjected to no restriction; it was lawful to distill as many times 1 hectoliter and a half of raw material as there were hectares under cultivation, on condition that a certain number of stock should be fed within the inclosure. At the present day agricultural distilleries are divided into two classes—the one class allowed to produce a maximum of 10 hectoliters in twenty-four hours or in forty-eight hours, having to pay therefor 10.68 francs or 12.22 francs duty; the other class producing 20 hectoliters in twenty-four or forty-eight hours, having to pay therefor 11.80 francs or 13.35 francs duty.

The reduction of 15 per cent on the duty may at first sight seem considerable, but it is absorbed, and more than absorbed, by the general expenses.

The agricultural distiller is obliged to set up his plant in the country, often in places where there is lack of communication; the industrial distiller establishes himself in an advantageous location, so that he finds it easy to load, unload, and transfer; he works with enormous quantities, amounting to from 50,000 to 70,000 kilograms a day, and can produce as much as 40,000 liters in twenty-four hours, whereas the agricultural distiller, ruined by competition, produces only 200 to 400 kilograms in the same time; a saving of 0.50 francs on every 100 kilograms, which the industrial distiller realizes on the general cost alone, represents $700 \times 0.50 = 350$ francs a day, or 105,000 francs a year.

The large distillery obtains its raw material under more favorable conditions. It is better situated for profiting by the fluctuations of the market. The distillers of molasses and those who use maize naturally profit by the fall in price of their raw material which occurs now and then in the market, and take advantage of the relative richness of this material in alcohol as compared to the price.

The rudimentary apparatus of the agricultural distillers prevents their using such material, and the result is that an industrial distiller can produce spirits at 0.25 franc and even 0.30 franc less per liter than the agricultural distiller, who can use only rye and malt.

The decay in agricultural distilleries is a fact which is patent to every eye, nor can the reduction of the tax save it unless the reduction is increased beyond 15 per cent.

The transformations and additions of material in which the agricultural distillers will be involved will be a heavy burden; owing to lack of space new buildings will be a necessity to many, and most of them are merely renters.

The manufacture of yeast will be impossible for most of them. Why talk about a privilege in the matter of tax? Does not the reduction apply to whole categories of citizens? No such scruples were formerly entertained; they ought not to stand in the way nowadays. The reduction of the duty in favor of agricultural distilleries goes back to 1837; that is to say, to a time close to the promulgation of the constitution, when its bearing and spirit ought certainly to have been well known.

What ought to be the aim of the legislator in this matter? To contribute to the improvement and fertilization of the land over the whole extent of the country, and especially where the soil is arid or waste. To that end factories ought to be subdivided, small distilleries scattered

and disseminated in great number in all our provinces. Small farming is not industrialized by being made tributary to a few great establishments, which, for that matter, consume far less domestic rye and malt than they do foreign products. It is important that our farmers should not only produce meat and fertilizers, but that they should do so by consuming on the farm the cereals which they themselves have harvested.

No doubt the large distillery renders a service to agriculture by selling to it dried or undried residues; but in this it merely imitates the cake manufacturer, who ships his goods into the country, from one extremity of the land to the other. However valuable this service may be it does not meet the purpose of the authors of the bill, which is to come to the aid of agriculture by creating everywhere small industrial centers, which may bring back to our country districts well-being and comfort, not only among our farmers, but also among the artisans, shopkeepers, laborers, whose fortunes are so intimately linked to those of our farmers. To cause work to revive among our rural population is the problem to be solved. The multiplication of agricultural distilleries makes straight for the object at which we are aiming.

Nobody believes that the desired end would be attained if the work of agricultural distillers was restricted to the production of low wines, leaving the rectifying business to the great rectifying distillers and to the professional rectifiers, to whom the country distiller would have to sell his low wines. Public hygiene is interested in having the spirits, especially gins or grain spirits, delivered for consumption free from the noxious elements which turn them into a slow poison, producing such dreadful ravages among the inebriates.

It is said that agricultural distillers, whose establishments are of necessity on a small scale, are imperfectly equipped for rectification. The large factories, on the contrary, are fitted out to perfection.

In forbidding agricultural distillers to rectify their products within the inclosure of the distillery the number of rectifying distillers and rectifiers would be made very small, which would enable the agents of the treasury and of the ministries of agriculture and industry to exercise an active and severe supervision over the beverages sold for consumption.

Here there naturally arises the question to what extent it may be said that the rectification of spirits of grain and of alcohol is imperfect in our country. We may ask what difference there is in this respect between the gins that come out of our agricultural distilleries and the spirits produced from maize, beets, and molasses produced in our great factories.

Your special commission, desiring to obtain light on this subject, addressed, first to the minister of finance, and next to the minister of agriculture, the following question:

Question. Could not the Government communicate to its commission some analyses regarding the hygienic qualities of the product obtained by the Government officials (*a*) as regards samples taken from agricultural distilleries; (*b*) as regards samples taken from industrial distilleries?

ANSWER OF THE MINISTER OF FINANCE.

The department of finance has no information on this subject, but the Government thinks it proper to point out to the commission the analyses of spirits and alcohols made by Messrs. Depaire, Peterman, and Graftian, of which Mr. André, inspector attached to the ministry of agriculture, has given an account in a work which is annexed to the minutes of the commission on distilleries.

On the other hand, it appears from a passage in the work of Mr.

André, that the officials of the inspection of the manufacture and sale of food stuffs recently collected quite a number of specimens of spirits and of divers products of distillery.

The department of agriculture, which this question specially concerns, will no doubt be able to furnish the information asked by the commission.

ANSWER OF THE MINISTER OF INDUSTRY AND AGRICULTURE.

In reply to the question contained in your letter of April 30 in regard to the relative purity of the alcohols sold for consumption, and derived (*a*) from agricultural distilleries, (*b*) from industrial distilleries, I have the honor to inform you that in the present state of the alcohol industry no notable distinction can be established between the two kinds of products.

The so-called agricultural distilleries are in reality for the most part nothing else than small industrial distilleries. The raw material, the apparatus, and the methods are about the same in both classes, aside from quantities and dimensions. Still, large distilleries have improved apparatus which is able to furnish more completely rectified alcohol, which to that extent offers a better guaranty of purity.

The gin put into commerce by agricultural or industrial distilleries is mostly a mixture of more or less impure grain spirits with well rectified beet or molasses alcohol.

The alcohol manufacturers buy low wines of the grain distillers; the grain distillers buy alcohol of the distillers of beets or molasses.

If the agricultural distillers confined themselves to selling the products of their manufacture, without mixing therewith any industrial alcohol; if these products were prepared, as one might be tempted to believe they are, by primitive or defective methods, by means of a rudimentary and unimproved apparatus, the gins coming from the agricultural distilleries would evidently be of inferior quality; but we have seen that this is not generally the practice of these establishments.

It is seen from this that the ministers of finance and agriculture do not tell us much regarding the relative purity of the two kinds of spirits.

It can not be denied that supervision would be easier and more thorough and decided if the number of establishments authorized to rectify was limited.

But the agricultural distillers reply that more than one of them possesses rectifying apparatus that comply with the rigorous requirements which are rightly demanded in the interest of public health; that improved plant is no longer so costly as it used to be; that agricultural distilleries may be cited whose products enjoy a deserved renown because of their exceptional purity, their aroma, their taste, and whose labels are in such demand that they are quoted at higher prices than many others.

If adulteration takes place, it is practiced not so much by distillers as by retailers. The latter ought to be looked after with a watchful eye, much more than the alcohol manufacturer.

More than one agricultural distillery has its customers exclusively among the retailers of the vicinity. By what right should agricultural distilleries be made to pass under the Caudine Forks of their competitors, the large distillers? On what could this threatened expropriation be based? Is it not enough that their work has been limited and that they have been subjected to restrictions and to onerous conditions which hamper and check their progress?

They ask furthermore whether the prohibition which it is proposed to issue against them is quite conformable to the spirit of the Constitution, and whether such a measure does not come very near being a violation of industrial and commercial liberty.

In no case could agricultural distillers be forbidden to rectify outside of their factories, and to form syndicates for the purpose.

Your special commission, impressed by the arguments for and against the two propositions, decided to consult the minister of finance, and addressed to him the following question:

Question. Would the Government have any objection to prohibiting the distillers benefiting by the deduction of 15 per cent from rectifying their products? These distilleries being authorized to deliver their low wines to the industrial distilleries, the Government could thus easily control the quality of the alcohol sold for consumption.

Answer. The Government would not object to any special encouragement of the agricultural distilleries producing low wines exclusively. It recognizes that the service of the inspection of quality of the alcohol, which the Government has decided to establish, would be rendered easier by the diminution of the number of factories turning out the alcohol directly for consumption after rectification. Nevertheless, there would be no need to resort to absolute prohibition, since a number of agricultural distilleries are well enough equipped to produce gins of good quality.

Hence, it might be convenient to abandon the uniform rate of reduction and to substitute for it different rates, corresponding to the two cases considered.

Upon this declaration your special commission considered whether it would not be better to adopt a midway course. To this end a proposition has been made to fix the reduction at 20 per cent, or 17½ per cent for agricultural distilleries which confine themselves to the manufacture of low wines, and at 10 per cent for agricultural rectifying distillers.

Passing on to the vote, your commission first of all rejected by three votes against two the radical proposition aiming at the suppression of articles 7 to 13 and their corollaries, which regulate the matters relating to the 15 per cent reduction of the tax.

The proposition to raise the reduction to 20 per cent in favor of agricultural distilleries producing only low wines and to reduce it to 10 per cent for agricultural rectifying distillers was adopted by the same majority.

These votes, which regard the very essence of the project, are readily seen to be principal votes, passed on the two capital questions which divide the industrial and the agricultural distillers.

By the first vote the special commission favors the system intended by the bill, to wit: Tax on output, with reduction for the benefit of agricultural distilleries.

By the second vote the special commission pronounces in favor of a mixed system as regards rectification. If in reality such a solution on the one hand renders the position of the rectifying distiller more difficult by diminishing his reduction, on the other hand it favors the agricultural distiller, who produced merely low wines, by increasing his reduction.

Aside from articles 7 to 13 of the bill, which relate to the reduction of tax granted to agricultural distillers, but few observations were made on the other articles, which relate to the basis and amount of tax (articles 1 to 6, inclusive); to the total or partial remission of the excise on alcohol intended for the arts (articles 14 to 78); to exemption

from excise in favor of rectifying distillers and liquor manufacturers (articles 18 to 19); to the establishment of distilleries, the work of manufacture (articles 20 to 61); to divers provisions (articles 62 to 78); to the special provisions applicable to certain classes of distillers (articles 79 to 88); to the minimum amount for the State in the proceeds of the tax (article 89); to the credit account for the payment of the tax (articles 90 to 98); to the transcription of the duty (articles 99 to 100); to exportation (articles 101 to 115); to deposit in a public warehouse (articles 116 to 122); to the penalties (articles 123 to 153); and, finally, to the general provisions (articles 154 to 166).

This simple enumeration gives an idea of the vast amount of work that had to be done by the department of finance to assure the proper application of the new system and to safeguard at one and the same time the interest of the treasury against fraud and the liberty of the manufacturers. Considered as a whole, the bill, which is a veritable code for the distillation of spirits, will constitute the most liberal legislation known, as regards the methods of inspection and collection. It is a work that does honor to those who conceived and brought it about.

If it does not raise an insuperable barrier to alcoholism it nevertheless supplies weapons against adulteration and fraudulent manufacture.

On this and other accounts it deserves the consideration of the chamber. Detailed explanations of the working of the bill will be found on pages 5 to 10 of the argument, which draw its outlines very clearly. To this we refer the reader.

Care must of course be taken to facilitate for existing distilleries the transition from one system to the other.

On this special point your commission had certain scruples, and submitted them to the minister of finance in the following question:

Question. The bill grants to distillers up to December 31, 1897, the option between the old and the new method of taxing; on the other hand, article 163 of the bill applies immediately certain provisions of the new law, which render a choice impossible, owing to the modifications which they make in the provisions of the law of 1887. Should not this anomaly be corrected?

Answer by the Government. The first section of article 163 of the bill makes articles 7, 83, 9, 13, 27, 28, 29; § 1 of articles 48, 72 to 74, 80, 141, and 133 of the bill applicable to distillers who continue to work after the system of the law of July 18, 1887.

The law of 1887 allows the deduction of 15 per cent to agricultural distillers, under certain conditions, without taking into account the kind of raw material used (with the exception of seed fruit and kernel fruit).

This reduction has always been criticised, as it concerns only those who distill molasses, because they produce no residue for feeding stock.

As § 3 of article 7 of the bill suppresses the reduction of 15 per cent on the excise duty for the distiller of syrup, molasses, etc., it is only just that this measure should also be applied to those distillers who shall continue to work under the present system.

The provisions of articles 9, 13, 48, 73, 74, 80, 141, and 143 do not relate to the equipment of distilleries; their object is mainly to make the inspection more strict, and they will in nowise annoy honest distillers.

The provisions of articles 27 and 29, § 1, which give greater guarantee against fraud, will oblige distillers to modify their apparatus somewhat, but these changes will not involve great expense.

Article 28, indeed, prohibits the introduction of alcoholic vapor in suspension in the fermenting vaults, but, on the other hand, it authorizes the minister of finance to allow the distillers, under certain conditions, to collect the carbonic acid disengaged during fermentation.

It is readily understood that this authorization is subject to certain conditions.

In fact, the administration is aware that in certain cases the operation by which carbonic acid is collected may give rise to the transfer of a certain quantity of alcohol, which might be collected, and thus escape the duty.

Article 72 authorizes the minister of finance to establish permanent officials in the distilleries. No advantage will be taken of this right, especially in factories where the present system is used, except in exceptional cases; for example, in case it was suspected that fraudulent manœuvers had been practiced, or in case the importance of the factory required it.

The second section of article 163 of the bill provides that the provisions of articles 14 to 17, 38, §§ 4 and 5; of articles 86 to 88, 143, 145, 146, 148, § 2; of articles 152 and 156, § 3, are of general application.

Among these provisions are some favorable to distillers which prefer the old method to the new, for example, articles 14 to 17.

As regards the others, they do not concern the distillers who prefer the tax on the output any more than those who decide to work according to the tax on the capacity of the vats. Some of these articles relate specially to rectifiers and liquor manufacturers, others relate to measures of superintendence; others, finally, establish certain penalties.

By what precedes it is seen that the provisions of the bill applicable to distillers who continue to work under the old method will not prevent them from choosing the method of tax which suits them.

Hence there is no occasion for modifying article 163 of the bill, which, in the opinion of the Government, involves no anomaly.

Despite the observations presented by (?) the minister of finance, it is nevertheless true that since duties will be established on imported yeast, the distillers who will find themselves obliged for a special reason, perhaps imperative, to continue to work under the old system, will be in a less favorable situation than those who have accepted the tax on the output.

Moreover, they will be subjected to numerous new formalities, nor will they escape the expense resulting from certain apparatus which they are obliged to set up and which constitutes a heavy expense, whose utility will only be of limited duration.

There is one provision which, in the opinion of your commission, should be modified: Article 7, No. 2, comprises among the conditions constituting the character of an agricultural distillery the obligation incumbent on the distiller to himself cultivate, within a radius of 5 kilometers from the factory, 3 hectares of arable land, market gardens or meadows, for every 8 liters of spirits, at 50 degrees, at the temperature of 15 degrees centigrade, distilled within twenty-four hours.

The words "or meadows" were introduced in the law of July 18, 1887, as an amendment. Some honorable member wished by this amendment to render a service to grass-growing districts. Is not this a contradiction? The stock put in pasture is not fed with the residue on the farm, but finds its food in the pasture itself; at least, in very large part.

In adopting the amendment the representatives did not perceive that they were opening a door to abuse, and that the pastures might soon

become a pretext for the creation of pretended agricultural distilleries, which in reality would be industrial distilleries, enjoying the 15 per cent reduction.

Pursuant to these observations, the special commission proposes to suppress in article 7 the words "market gardens or pastures."

The minister of finance sent to the special commission on June 25 last, after it had terminated its labors, several answers to the observations made by certain distillers upon the introduction of the bill on alcohol, as well as various amendments presented by the Government. They will be found in the following note:

[First note.—Distilleries.]

ANSWERS OF THE MINISTER OF FINANCE TO THE CRITICISMS MADE BY CERTAIN DISTILLERS UPON THE INTRODUCTION OF A BILL CONCERNING ALCOHOL, AND AMENDMENTS PRESENTED BY THE GOVERNMENT.

ART. 5. SEC. 1. The strength and temperature of the spirits produced are determined by means of instruments whose character is prescribed by the minister of finance.

SEC. 2. The minister of finance may prescribe the use of tables of reduction for fixing the volume and strength of the spirits.

Criticism. It is desirable that the instruments and tables of reduction be placed at the disposal of the distillers upon payment.

Answer by Government. The manufacturers can obtain the instruments from the makers; as regards the tables of reduction, they will be found in the instructions, which will be sent to the distillers by the administration.

ART. 6. SEC. 1. When the spirits produced and collected in measuring vessels intended for this purpose consist of low wines, a reduction is granted to compensate for the waste and loss resulting from rectification.

SEC. 2. This reduction of 4 per cent for low wines which at the moment of ascertaining the output are of a strength not exceeding 65 degrees, at 15 degrees centigrade; and 2 per cent for the low wines of a strength between 65 and 90 degrees, inclusive, at the same temperature.

SEC. 3. No reduction is granted for spirits whose strength at the above-mentioned temperature exceeds 90 degrees, nor for those that have been rectified directly, either all or in part.

SEC. 4. For calculating the reductions provided in the present article, the quantities ascertained are theoretically reduced to an alcoholic strength of 50 degrees Gay-Lussac, at the temperature of 15 degrees centigrade.

Criticism. It is demanded that the reduction granted to compensate the waste and loss in rectification be suppressed.

Answer. It appears from the work of the special commission on distilleries, which meets at the ministry of finance, that in practice it will be difficult to apply the provision in question.

According to information furnished by very competent distillers and chemists, it will hardly be possible to ascertain, on the one hand, whether a distiller has or has not a right to a reduction of 2 or 4 per cent; and, on the other hand, whether the product has or has not undergone incipient rectification.

The above commission recognized, moreover, that the suppression of the reduction would in no way hurt the interests of the distillers, since

the reduction constitutes a premium which benefits none but the consumers.

Under these circumstances the Government proposes to abandon the measure that has been criticised. But as a tax is generally levied on the raw product of distillation—that is to say, the low wines—and as these, before they can be exported as alcohol or spirits, have to be rectified, and thus undergo a loss which must be taken into account in fixing the rebate to be granted, a bonus of 4 per cent might be granted on exportation.

ART. 97. SEC. 1. The duty assessed in the cases mentioned under letters *b*, *c*, *d*, *f*, and *g* of sec. 1 of article 95, at the rate of 64 francs per hectoliter of drinkable spirits, registering 50 degrees Gay-Lussac, at the temperature of 15 degrees centigrade. When the spirits are of less or greater strength the duty is calculated in proportion.

SEC. 2. The payment is calculated to a degree and to a tenth of a degree; fractions less than one-tenth of a degree are neglected.

SEC. 3. The payment is charged to the term of credit next due.

REMARKS OF THE GOVERNMENT.

The Government proposes to modify, in consequence, article 97 of the bill, and to suppress article 6, which is superfluous.

AMENDMENT PRESENTED.

ART. 97. SEC. 1. The duty is assessed per hectoliter of drinkable spirits registering 50 degrees Gay-Lussac, at the temperature of 15 degrees centigrade, at the rate of 64 francs in the cases mentioned under letters *b*, *f*, and *g* of sec. 1 of article 95, and at the rate of 64 francs, plus 4 per cent, in the cases mentioned under letters *c* and *d* of the same paragraph.

When the spirits are of less or greater strength, the payment is calculated in proportion.

ART. 7. SEC. 2. By agricultural distillers are understood—

A. Those who utilize their residues of distillation to feed stock of their own, kept by them within the inclosure of their factory, and furthermore satisfy the following conditions:

1. To feed in the inclosure of the distillery and throughout the duration of the work either three head of large stock (not including horses) or twelve hogs or twenty-four sheep for every hectoliter of spirits at 50 degrees at the temperature of 15 degrees centigrade, recorded within twenty-four hours.

2. To cultivate themselves within a radius of 5 kilometers from the factory 3 hectares of arable land, market gardens, or meadows, again for every hectoliter of spirits, produced under the conditions above indicated.

B. Those who distill seed fruit and kernel fruit of their own harvesting.

C. Farmers associated in a cooperative way for the running of a distillery.

The minister of finance determines the conditions to which these associations have to submit.

SEC. 3. Those who use syrup, molasses, glucose, wine, or mash, or who distill fruit imported from abroad, can in no case be considered as agricultural distillers.

Criticism. Some agricultural distillers ask to be allowed to use the surplus of their residue outside of their establishment, and to sell it if need be.

Answer. The Government sees no objection to modifying the bill to meet the desires of the parties interested.

AMENDMENT PRESENTED.

ART. 7. SEC. 2. By agricultural distillers are understood—

A. Those who utilize all or part of their residue of distillation to feed stock belonging to them and kept by them within the inclosure of their factory and who furthermore satisfy the following conditions:

1. As in the bill.

SEC. 3. Those who use syrup, molasses, glucose, wine, or mash, who distill fruit imported from abroad, or who manufacture yeast not used in their own distillery can in no case be considered as agricultural distillers.

ART. 18. SEC. 1. Rectifying distillers—that is to say, those who do not use raw material, and whose work consists solely in rectifying either low wines or alcohol—are exempted from all excise duty.

SEC. 2. Manufacturers who run a distillery and moreover rectify low wines or alcohols not of their manufacture are classed with rectifying distillers. As such they are subject to the same obligations.

Criticism. Shall those distillers who merely rectify their own low wines keep the registers spoken of in article 86?

Answer. Article 18 leaves no doubt on this subject; only those distillers who rectify low wines or alcohols not of their manufacture are subject to the formalities prescribed by article 86.

ART. 26. SEC. 2. The pipes are painted in different colors according to their service, to wit, red for low wines or alcohols; white for vapor; black for water and residue.

Criticism. It seems preferable to paint the vapor pipes black.

Answer. The Government admits this criticism.

AMENDMENT PRESENTED.

ART. 26. SEC. 2. The pipes are painted in different colors according to their service, to wit, red for low wines or alcohols; black for vapor; white for water or residue.

ART. 27. SEC. 1. There shall not be present in the fermenting vaults of the distilleries either open, fixed, or movable nocheres or tubes or movable pipes.

SEC. 2. Only pipes solidly fixed serving to convey water and raw material are admitted in these vaults. These pipes must be so placed as to render impossible the taking out of liquids contained in the fermenting vats.

SEC. 3. The plant set up according to the preceding paragraph is subject to the approval of the minister of finance.

Criticism. The prohibition relating to the presence of tubes or movable pipes in the fermenting vaults is criticised.

Answer. The necessity of this measure has been demonstrated by the fraud that was practiced by means of movable and transportable tubes.

Hence it is proper to maintain this provision, which involves no annoyance whatever for the distilleries.

ART. 29. SEC. 1. The stills, columns, and generally all the distilling apparatus, including the coolers, for low wines or alcohols, are set up in such way as to be easily inspected.

If this apparatus rests upon masonry or other supports, this masonry or support must be provided with openings sufficient to make sure that they are not traversed by any pipe or tube.

SEC. 2. The gauge (furnished with an alcoholometer and thermometer) which receives the low wines or alcohols issuing from the distilling apparatus must be surmounted by a glass globe, so fixed that none of the liquid can be taken out.

A spigot the pattern of which is approved by the minister of finance may, however, be attached to distilling apparatus to serve for taking samples.

Criticism. 1. Will it be necessary to demolish the masonry and supports of the columns and stills?

2. Will the administration furnish patterns or designs of bell gauges?

Answers. 1. It is absolutely indispensable that the supports of the columns and coolers be visible. All the members of the technical commission on distilleries are agreed on this point.

2. This demand will be satisfied; the technical commission is now studying the model of a bell gauge which will be prescribed.

ART. 30. SEC. 1. The stills, columns, and generally all the distilling apparatus are connected with one or more measuring vessels located in a special chamber.

SEC. 2. The minister of finance prescribes the pattern and regulates the method of placing and closing the measuring vessels and the special chamber.

SEC. 3. He may, furthermore, require that there be placed between the coolers of the distilling apparatus and the measuring vessels indicators of the low wines or the alcohols, the pattern of which he also prescribes, as well as their mode of setting up and use.

Criticism. It seems desirable that agricultural distilleries should not be obliged to set up measuring vessels in a special chamber, or at any rate that the exemptions, which the minister of finance, in virtue of article 59, is authorized to grant to distillers whose average record for twenty-four hours is less than 2 hectoliters of spirits of 50 degrees, be extended to the distillers whose production amounts to 4 hectoliters.

Answer. These questions, which are being examined at present by a special commission, must be held in reserve.

It appears, however, from the discussion of this commission that fraud is to be especially feared in small distilleries where the superintendence will be less strict than in large establishments, and under these circumstances it will be difficult for the Government to go beyond the concessions permitted by article 59 as regards distilleries in which the daily production does not exceed 2 hectoliters of low wine at 50 degrees.

Article 59. The minister of finance may in special cases authorize exemptions from the provisions of articles 30, 43, and 44 in favor of distilleries whose average product for twenty-four hours is less than 2 hectoliters of spirits at 50 degrees at the temperature of 15 degrees centigrade.

ART. 31. SEC. 1. The tubing opening into the distilling apparatus and that which connects this apparatus with a measuring vessel are so arranged as to render impossible all fraud by the withdrawal of material, alcoholic vapor or liquid.

SEC. 2. This plant is set up to the satisfaction of the minister of finance, who may order that leads, padlocks, or double sheaths be placed on the tubes if deemed necessary.

SEC. 3. If the distilling apparatus includes tubes serving for the discharge of vapor these tubes must open into the air and be so arranged that the water of condensation is lost by running off.

Criticism. Will it be allowed to keep the regulating spigots and the joints intervening between the vats and distilling apparatus?

Answer. The conditions of the setting up of the tubes, measurers, etc., will be regulated later on, when the special commission has finished its work.

This plant will have to be set up to the satisfaction of the minister of finance, to whose judgment it must be left to grant exemptions where circumstances permit.

ART. 32. SEC. 1. The capacity of the fermenting vats, measuring vessels, and indicators is ascertained by filling, according to the rules established by the minister of finance, and by means of instruments and measures approved by him.

Criticism. May the distiller procure measures which may serve to ascertain the capacity of the fermenting vats, measurers, etc.?

Answer. There can be no question of furnishing measures to the distillers; but in any case they will have the right to verify their own measure by means of a liter, which will be placed at the disposal of the agent of the administration.

ART. 41. SEC. 1. The declaration prescribed by the preceding article must be conformable to the indications of the pattern prescribed by the minister of finance.

Criticism. Will formulas for the declaration of work be sent to the distillers, as done for the railroads?

Answer. No. We are here dealing with an expense that is really insignificant to the distiller. Moreover, the administration could not furnish printed blanks of that kind, as they would vary from factory to factory.

ART. 43. The distiller keeps in his factory a register conformable to the pattern prescribed by the minister of finance, on which he enters for every fermenting vat—

a. The date and hour of beginning maceration as they occur. This entry should mention the number of the vat, and, if need be, of the auxiliary vessels, such as crushers, boilers, maceraters or coolers.

b. The nature and quantity of raw material used.

c. The yield of the material contained in the vat in spirits of 50 degrees Gay-Lussac, at the temperature of 15 degrees centigrade. This yield is entered by writing the numbers out in full, at least one hour before the beginning of the distillation in the vat.

d. The date and hour of beginning distillation, before actually beginning the transfer of material into the distilling apparatus.

Criticism. Objections are raised against the obligation imposed on the distiller to ascertain and enter in a register the output per hectoliter of the material contained in the fermenting vat. Will not this be a very delicate operation, very difficult, devoid of usefulness, etc.?

Answer. To suppress this obligation would be to upset the whole economy of the system, which aims to substitute for the present order of things the tax on the output, without having recourse to the vexation of superintendence.

It is evident that the first object of the legislature must be to guard against fraud. Now it has been proved that it would be possible (unless presented by a permanent inspection of the factory) to withlow draw wines or alcoholic vapors from control between the distilling apparatus and the measuring vessel.

Hence it is indispensable to resort to a means enabling one to deduce the output before the material is put in the still or the column.

In England and France the means used for this purpose is the process

of attenuation of densities, and the previous declaration of output and raw material. This fact is all the more significant because in those countries the factories are inspected by permanent employees.

In Holland the Government officials have the right not only to proceed to the distillation of a vat, but, if they deem it proper, of all the vats of one day's work. If the result of the distillation of one vat is greater than that declared by the owners, and if the difference exceeds 5 per cent of the declaration, the increase is applicable to all the work comprised by the declaration.

The bill submitted by the Government is a good deal more liberal. If a difference was noted in the output declared for one vat this difference in excess would be entered only for that vat, and there is no penalty unless the difference amounts to 5 per cent. Now, the fact is that all the distillers can declare the output to within about 5 per cent.

The bill is drawn up in the interest of honest distillers, and one may ask how it could have given rise to such criticism. The control by means of small apparatus has been recommended by the commission on distilleries.

True, it is that certain distillers who favor this method would like to see it applied as a matter of simple control without making the observed differences give rise to a record and possibly to fines. This would be a measure devoid of sanction; the administration under these circumstances would have to decline all responsibility in regard to frauds that would become possible, as affirmed by the most competent person.

Furthermore, as stated in the argument, most of the manufacturers whose factories are of any importance, and even certain agricultural distillers record the output of their vats. The law will render a service to those who do not do so now by obliging them to keep a more accurate account of the value of their operations.

This was the result in the brewing business, where a great number of manufacturers before the law of 1885 absolutely did not know what they got out of their raw material.

Moreover, the record of the output by means of the small distilling apparatus is so simple an operation that in most of the distilleries the care of it is intrusted to a laborer.

ART. 44. The distiller who, after his declaration, causes his vats to ferment for more than twenty-four hours, shall furthermore keep a register conformable to the model prescribed by the minister of finance, on which he enters the density and temperature of the material—

1. Immediately after putting in.
2. Twenty-six hours after the hour of putting in.
3. At the moment of the declaration of the output required by letter *c* of the preceding article.

Criticism. The agricultural distiller ought to be exempted from keeping the register prescribed in this article.

Answer. This article is not new; it is found in the existing law, and up to this day no distiller either agricultural or industrial has protested against the keeping of this register.

As in the case of the record of the output, so in this case, it is a laborer that generally makes record of the density.

ART. 52. The manufacture of yeast or leaven (artificial yeast) is authorized by the minister of finance under the conditions fixed by him.

Criticism. What are the conditions that will be imposed on the manufacture of yeast?

Answer. The Government finds it impossible to answer this question. The manufacture of yeast will be a new industry in the country; the

authorizations granted will vary from factory to factory according to the method of manufacture followed, which will have to be previously submitted to the administration.

ART. 56. The temperatures of low wines or alcohols at the moment when they are presented for control must not be less than 10 degress nor greater than 30 degrees centigrade; their strength must not be less than 30 degrees Gay-Lussac, at 15 degrees centigrade.

Criticism. It would be better to decrease the alcoholic strength fixed at 30 degrees in article 56.

Answer. In agreement with the technical commission the Government holds that article 46 ought to be amended. According to the information obtained it will be difficult in agricultural distilleries to present for control low wines having an alcoholic strength of 30 degrees; on the proposition of an agricultural distiller, a member of the commission, it has expressed the wish to have the alcoholic strength fixed at 25 degrees. The commission has also expressed a desire to have the temperature of the low wine when presented for verification by the officials reduced to the minimum of 5 degrees instead of 10.

The Government proposes to modify article 56 as indicated below.

AMENDMENT PRESENTED.

ART. 56. The temperature of the low wines or alcohols at the moment when they are presented for control must not be less than 5 nor greater than 30 degrees centigrade; their strength must not be less than 25 degrees Gay-Lussac, at the temperature of 15 degrees centigrade.

ART. 57. SEC. 2. The measuring vessels are not allowed to be emptied till after the record of the output has been taken by the agents of the administration. It can only be effected after the expiration of the two hours mentioned in article 55, even when the output has been recorded before the expiration of those two hours.

Criticism. The employees will no doubt have to be present throughout the time occupied in emptying the measuring vessels.

Answer. This concerns exclusively the administration, which is charged with organizing the service of superintendence.

It may be said, nevertheless, that it is not necessary that employees should be present while the measurers are emptied. Care will be taken to leave to the distiller the free disposal of the low wines as soon as the period of record-taking is expired. Furthermore, the Government, on the proposition of the special commission, presents an amendment to this article (See at the end.)

ART. 58. SEC. 1. The agents charged with superintendence draw up a form according to the model prescribed by the minister of finance, in which they enter:

A. The output shown by the distiller in his declaration of work.

B. The output entered by the distiller in the register of daily work.

C. The results of the verifications of output in the case provided by article 78.

D. The indications of the counter.

E. The results of the indications of the contents of the measuring vessels.

SEC. 2. The highest product resulting from the declared outputs and the records entered in the form serve as the basis for the final entry. This final entry is forwarded to the receiver of taxes at the expiration of every declaration of work by the above-named agents, who draw up for this purpose the requisite form.

SEC. 3. This operation establishes the total amount assessed, the reduction for waste granted by article 6, and the net amount assessed.

Criticism. The requirements of this article are found too rigorous, although the particular points are not specified.

Answer. The criticism seems to aim at the entry according to highest product resulting (1) from the declaration of the distiller; (2) from the output entered in the register for every vat, and (3) from the indications of the counter or the measuring vessel.

The criticism can not apply to the distiller's declaration of work. He will always take care to declare the lowest figure of output.

It rather relates to No. 2—that is to say, to the result of tests made with the small distilling apparatus. Now, the small distilling apparatus, the use of which has been approved by all competent distillers, and which has the sanction of experience, can not indicate an exaggerated output. In a word, it is not possible for it to indicate more alcohol than what is contained in the material. This is all the more the case, because the distiller has to declare his output one hour before beginning the distillation in the vat. That is to say, when the material is not yet entirely ripe, and because under these conditions the employees of the administration are to verify the output.

It is evident that out of the measures prescribed by the bill the critics attack precisely those that are most indispensable.

ART. 134. 10. Any alteration of the alcoholic degrees of the low wines or the alcohols by withdrawal of material by introduction of a foreign substance in the low wines or alcohols or by any other maneuver.

Criticism. An accidental withdrawal of material resulting in an alteration of the alcoholic degree may occur at any time.

Answer. It is known that the withdrawal of material is exceedingly rare in regular work. The distiller can always avoid it. This was stated in 1884 by Mr. Carbonnelle in his sketch of a system of tax on the output. (Commission on Distilleries, fourth meeting, p. 3.)

For the rest, distillers need not be alarmed. The penalties provided in the bill aim at fraud committed knowingly, and not accidentally. The administration will always know how to appreciate extenuating circumstances.

ART. 165. Provisions of existing law abrogated:

1. From the moment when the present law takes effect—

a. The provision of article 1 of the law of April 16, 1887, as to sugar, and that of the official customs tariff, which allow the free entry of sirup and molasses imported for distillation.

b. Articles 109 to 119 of the law of July 18, 1887.

c. Article 2 of the appropriations act of December 30, 1889.

2. Beginning on January 1, 1898, the law of July 18, 1887, on the manufacture of spirits.

Criticism. It is desired that the Government maintain the free entry of molasses intended for distillation.

Answer. It is indispensable in the interest of agriculture to favor the distillation of grain, and hence it is necessary to limit the distillation of molasses to the molasses derived exclusively from the sugar factories of the country.

It is objected that the existing great firms controlling large capital could easily purchase all this molasses; they could thus monopolize the distillation of this product, and crush the grain distillery.

But this monopoly is not to be feared. A competition will always be established by which everybody will profit.

The special commission established by ministerial decree of March

25, 1895, and ordered to study in particular the mode of setting up the pipes for the material, vapors, etc., has expressed a desire for the modification or completion, not only of Articles 56 and 97, but also the articles coming after them in the bill.

ART. 25. SEC. 1. The fermenting vats are so arranged that they can always be approached without trouble to examine them inside, as well as the tubes and pipes opening into them.

SEC. 2. The same is to be said of the macerators, boilers, crushers, coolers, yeast, and leaven vats, and generally of all the utensils serving for the preparation of the material for distillation.

REMARKS OF THE GOVERNMENT.

The control of the output by means of the small distilling apparatus will be, in the unanimous opinion of the members of the commission, one of the best means to insure regularity of the work in the distilleries. It has thus seemed necessary to establish certain guarantees for the taking of the sample to be distilled and to facilitate the record and the calculation of the empty space that may exist in the fermenting vat at a moment the sample is taken. The commission thinks that it is indispensable to apply to all the distilleries using more than one fermenting vat the provisions of the Royal Decree of October 31, 1891, now in force, in the molasses or beet juice distilleries.

The Government adopts this view and proposes to complete the provisions of articles 25 and 78.

AMENDMENT PRESENTED.

ART. 25. SEC. 1. The fermenting vats are so arranged that it is always possible to approach them without any trouble to examine them inside, as well as the tubes and pipes opening into them.

SEC. 2. The same is to be said of the macerators, boilers, crushers, coolers, yeast, and leaven vats, and generally of all the utensils serving to prepare the material for distillation.

SEC. 3. In the distilleries where there are several fermenting vats the outlet spigot of every one of these vats is so arranged that at a place properly lighted and easily accessible it may receive a lead, and that the matter contained in the vat can not be discharged without taking off or changing this lead.

The plant set up in virtue of the present paragraph is subject to the approval of the Administration.

SEC. 4. For the fermenting vats, included in the declaration of work, the lead mentioned in sec. 3 is applied before the beginning of a maceration is entered in the register mentioned in article 42; it can not under any pretext be removed except at the moment when the material is subjected to distillation—that is to say, after the prescribed entry in the same register.

As regards the vats not used, the outlet spigot remains sealed, supposing that the distillery is working throughout the time these vats are out of use.

SEC. 5. The distiller or his representative imprints by means of the punch mentioned in sec. 4 a neat and visible impression on that part of the lead through which the string passes.

When making a visit, the excise officers apply a special impression on the part of the lead reserved for them. The distiller is responsible for keeping the leads in good order.

SEC. 6. The distillers are obliged to furnish the string, the leads,

and the punch according to the model prescribed by the minister of finance.

ART. 78. SEC. 1. The agents of the Administration may ascertain the alcohol output of one or more fermenting vats by means of a special apparatus, the pattern of which is prescribed by the minister of finance. In this way they can verify the entries made by the distiller in compliance with article 43, letter *c*, in the register of daily work.

SEC. 2. The result of the record of the agents is entered by them on the form spoken of in article 58.

AMENDMENT PRESENTED.

ART. 78. SEC. 1. The agents of the Administration may ascertain the alcohol output of one or more fermenting vats by means of a special apparatus, the model of which is prescribed by the minister of finance. They verify in this way the entries made by the distiller in compliance with article 43, letter *c*, in the register of daily work.

SEC. 2. The distiller is bound to provide his fermenting vats with a metric scale to enable the agents of the Administration to ascertain the empty space in these vessels at the moment of verification mentioned in sec. 1.

In case the construction of the vats should not permit the introduction of a metric scale, the empty space can be ascertained by means of gauging rods, or any other means approved by the minister of finance.

SEC. 3. The result of the record spoken of in sec. 1 is entered by the employees in the form mentioned in article 58.

ART. 55. SEC. 1. The products of the distillation of one day's work or of a period of work are gathered, either directly or after passing through the indicator in the measuring vessels mentioned in article 30. During a period of two hours at least from the end of the distillation of the last vat these products are kept at the disposal of the agent of the Administration charged with ascertaining the output.

SEC. 2. If the distillation of raw material is finished after 6 in the evening, the period of two hours begins on the next day at 8 o'clock in the morning.

REMARKS BY THE GOVERNMENT.

The commission was of the opinion that a space of two hours is too short to enable the officials to verify the output recorded by employees of lower rank. As this control is of undoubted utility, the commission proposes that article 55 of the bill be modified as shown in the following amendment:

AMENDMENT PRESENTED.

ART. 55. The products of the distillation of one day's work or of a period of work are gathered either directly or after passing through the indicator in the measuring vessels mentioned in article 30. They are there kept at the disposal of the agents of the administration charged with ascertaining the output—

a Up to 6 in the evening in distilleries where the work of distillation ends before noon.

b Up to noon on the next day in distilleries where the work of distillation ends after noon.

REMARKS BY THE GOVERNMENT.

The modifications made in the wording of articles 6, 55, and 97, involve changes in the wording of articles 8, 57, 69, and 117, which the Government proposes to modify, as shown below:

ART. 8. SEC. 1. The reduction provided in article 7 is only granted

if the record of distillation in twenty-four hours does not exceed on an average for every declaration of work 4 hectoliters of spirits at 50 degrees Gay-Lussac, at the temperature of 15 degrees centigrade.

ART. 57. SEC. 1. No material apt to lower the degree of strength of low wines or alcohol shall be introduced either directly or indirectly into the fermenting material in the distilling apparatus or in the indicators or measuring vessels.

SEC. 2. The measuring vessels are not allowed to be emptied until after a record is taken of the output by the agents of the administration. They are only to be emptied after the expiration of the period mentioned in article 55, even if the output has been recorded before the expiration of that period.

ART. 69. SEC. 1. While the work is going, on the distillery must always be accessible to the officials, and the distiller must be there present or represented by someone able to give them the necessary indications at the time of their visit.

SEC. 2. The provisions of the preceding paragraph are applicable—

a. During the preparation of the material for fermentation, beginning from the filling of the vats, or the auxiliary vessels (macerators, boilers, crushers, etc.).

b. During the hour preceding distillation.

c. During the work of distillation and rectification.

d. During the period fixed for recording the output.

SEC. 3. In other times of work the distiller is bound to give free access to his distillery to the officials within two minutes after they have rung the bell, or, in default of a bell, when they have rapped three times, each time with an interval of two minutes.

ART. 117. SEC. 1. The withdrawal of spirits deposited in a public warehouse takes place within the limit of the quantity fixed in article 98, unless there is question of the remainder of the quantity recorded.

SEC. 2. The warehouse account is closed—

a. By withdrawal, after payment of the excise duty, according to the rate of payment settled at the moment when the spirits were deposited, with the addition of the bonus of 4 per cent mentioned in article 97.

b. By exportation, under security for the duty, and under the conditions set forth in article 101.

c. By the sale of the spirits in the warehouse to another dealer.

REMARKS OF THE GOVERNMENT.

Finally, the Government, anxious to take account of the existing plants, and to avoid overgreat expenses of changes to distillers, ought to be empowered to approve the plant that has been set up in compliance with article 29. It therefore proposes to modify that article, as given below.

AMENDMENT PRESENTED.

ART. 29. SEC. 1. The stills columns, and generally all the distilling apparatus, including the coolers for low wines or alcohols, are set up in such way as to be easily inspected.

If this apparatus rests on masonry or other support, this masonry or support must be provided with openings sufficient to make sure that they are not traversed by any pipe or tube.

SEC. 2. The gauge (provided with an alcoholometer and thermometer) which receives the low wines or alcohols, issuing from the distilling apparatus, must be surmounted by a glass globe, so fixed that no liquid can be withdrawn.

A spigot may, nevertheless, be fixed in the distilling apparatus for taking samples.

SEC. 3. The model of this spigot, as well as the apparatus set up in compliance with the first paragraph, are subject to the approval of the minister of finance.

The Minister of Finance,
P. DE SMET DE NAEYER.

BRUSSELS, *June 25, 1895.*

The above note was addressed to the special commission on July 25, after it had terminated its labors, and had only to listen to the reading of the report. It took up the note during the meetings of June 26 last, and the 3d and 4th of the present month of July.

Among the amendments which the minister of finance proposes to introduce in his original bill there are two which particularly attracted the attention of your commission; namely, those relating to articles 6 and 7.

According to article 6 of the bill, when the output of the low wines is ascertained, a deduction is granted to compensate for waste and loss resulting from rectification.

This deduction being made to correspond to the alcoholic strength of the low wines is 4 per cent for the low wines, which at the moment of ascertaining the output are of a strength not greater than 65 degrees Gay-Lussac, and 2 per cent for the low wines of a strength greater than 65 up to 90, inclusive. No reduction is granted for low wines exceeding 90, nor for those that have been rectified directly, all or in part.

We are told by the minister of finance that the suppression of this article is demanded.

The minister is of the opinion that this demand might be complied with; that accordingly article 6 may be suppressed, and therefore it would be necessary to modify articles 8 and 97. In his opinion the reduction constitutes a premium, and in the end benefits only consumers and not producers of spirits; hence the latter have no interest in maintaining it.

It is of importance for the Chamber to know that the proposition to suppress article 6 is in no way due to the suggestion of the distillers, but it appears on account of an inventor who holds the patent of a rectifying apparatus intended to be fixed to the distilling column.

The agricultural distillers protest against this suppression of article 6. According to them it is not just to require payment of duties on the waste contained in their product, and to relieve of these duties those who distill at a high degree, or who by new processes succeed in rectifying directly their product in their distilling column, and to send it in the measuring vessel, avoiding waste, which diminishes their volume.

In advocating the suppression of the reduction which itself proposed the Government pleads the difficulties met with in ascertaining whether or not the distiller has the right to a reduction of 2 or 4 per cent. It claims that in practice the agent of the administration can not find out whether the products have undergone some rectification or begun to be rectified. These difficulties did not appear insurmountable to your commission any more than they had deterred the Government at first.

As a compensation for the suppression of the reduction of 2 or 4 per cent the Government offers to grant a bonus of 4 per cent on exportation of alcohol.

Before being exported, says the Government, the low wines have to

be rectified and hence it is just, in order to fix the drawback, to take into account the losses entailed by that operation. This supposes that the tax had been levied on the raw product of distillation, that is to say, on the low wines that have not been rectified, either directly or subsequently to their first distillation; now the Government says that direct rectification will be practiced.

As a consequence the tax will be levied in the large distilleries, not as the argument says on the raw products, but on more or less rectified products, and consequently the bonus on the part of the drawback will be paid on products that will hardly have undergone any loss as waste.

For the rest, the suppression of article 6 is in fact for the agricultural distillers an increase of tax. If it is desired to increase the rate of excise on spirits, it must be done openly, in a large measure, as was done in other countries, considering that the consumption of alcohol is a luxury and considering the necessity of committing alcoholism.

Influenced by these observations your commission pronounced for the maintenance of article 6.

The preceding observations had been written when your special commission received from the minister of finance the following note:

[Second note.]

"Article 6 of the bill on distilleries grants a reduction of 4 or 2 per cent, according to the alcoholic strength of the low wines, to compensate for the waste and loss of rectification. No reduction is granted for spirits stronger than 90 degrees, nor for those that have been rectified directly, all or in part.

"It was thought by the special commission meeting at the ministry of finance's, that it will hardly be possible to apply this provision. It would be very difficult to recognize whether low wine has been rectified directly or not, and in view of the abuses foreseen, the Government proposes to amend the bill by suppressing the above article 6. But as the product to be exported is rectified spirits, and as the tax is based on an unrectified product, the minister thinks that it is proper to grant a bonus of 4 per cent on exported alcohols.

"The special section charged with examining the bill seems not to share this view; it thinks that the suppression of the reduction of 4 or 2 per cent would be a disadvantage for agricultural distilleries, and it pronounces in favor of maintaining the article.

"It is thought that the fears of the special commission are unfounded.

"In fact, supposing that no distiller rectifies his low wines directly; in that case all would enjoy the reduction of 4 per cent; now this deduction constitutes in fact a diminution of a rate of tax, so that the industrial distillers will pay per hectoliter of low wines at 50 degrees, 64 francs, minus 4 per cent, or 61.44 francs, while the agricultural distiller will pay 64 francs, minus 15 per cent, or 54.40 francs, minus 4 per cent, or 52.22 francs; that is to say, a difference in favor of the agricultural distiller of 9.22 francs.

"On the other hand, if the reduction of 4 per cent is suppressed the industrial distiller will pay 64 francs per hectoliter of spirits, at 50 degrees, and the agricultural distiller will pay at the rate of 54 francs, minus 15 per cent, or 54.40 francs. In this case the difference between the two classes of distillers will be 9.60 francs. Thus the agricultural distillers would be favored to the extent of 38 centimes per hectoliter of low wine at 50 degrees.

"But it is to be further remarked—and the statements of the distillers in possession of the commission are very emphatic on this point—that large distilleries will not fail to introduce improved distilling apparatus,

enabling them to obtain the rectified products directly without the knowledge of the agent of the administration. It will be impossible for the latter to prove that the low wines have been rectified; and as in these cases these distillers will obtain unduly the bonus of 4 per cent, they will be in a privileged situation as compared to the agricultural distillers, since the latter can not set up the same apparatus.

"Hence the suppression of article 6 constitutes a double advantage for the latter.

"It must be added that an agricultural distiller is a member of the commission, and that he did not protest when the commission expressed a wish that the deduction in question be abolished.

"Furthermore, as the Government indicated in its answer to the questions raised by the special commission, the deduction of 4 per cent constitutes a premium to the benefit of the consumer.

"In suppressing it the tax is indirectly increased 4 per cent, or 1,440,000 francs, taking for base the sum of 36,000,000 francs, which the excise on the manufacture of spirits yields approximately at present.

"Under these circumstances it is thought that the amendment proposed by the ministry ought to be maintained as regards articles 6 and 97 of the bill."

This second note, which reached the special commission on July 3 last, confirmed the proposition made by the minister of finance in his first note, pages 20 and 22, above, in articles 6 and 99, to suppress article 6.

What is the meaning of the observations contained in the second note of the minister of finance? They mean that the administration of finance is powerless to prevent low wines more or less rectified directly in the distilling columns or in improved apparatus from being conveyed into the measuring vessels, to be there subjected to control for output.

Under the law now in force which establishes the tax on the contents of the distilling vats, the reduction in favor of the agricultural distiller is granted to them in an administrative way and in a somewhat indirect manner. Every year before the 1st of August the excise officers take samples of the raw products before rectification and fix the output according to the nature of the raw material subjected to distillation.

The department of finance deducts 4 per cent of the average tax corresponding to this output in favor of agricultural distillers.

This constitutes a diminution of the tax, benefiting the agricultural distillers exclusively on the head of waste in rectification.

For the tax on the contents of the distilling vat the bill substitutes the tax on the output.

Now, it happens that owing to new inventions and processes unknown before, it has been possible, as we said above, and as the Government affirms in its second note, to rectify the low wines almost completely in the distilling columns.

This new outfit is not within the reach of the small agricultural distillers who use the old-fashioned still.

The low wines collected in the measuring vessels will therefore be more or less charged with waste, according as they issue from the still of the small agricultural distiller or from the distilling column of a large distiller.

Thus the amount recorded will be unfavorable to the small distiller with his imperfect outfit, and favorable to the large distiller possessed of the most approved apparatus.

It seems, moreover, that it must be so whether article 6, granting the reduction of 4 or 2 per cent, be suppressed or not, so long as the output is calculated on the low wine.

In either case the large distiller will manage to perform the rectification in the distilling column. His position as compared with the small and imperfectly equipped agricultural distiller will be the same. Whether both receive or do not receive the reduction of 4 or 2 per cent, an advantage will certainly remain for the industrial distiller. On the other hand, the decision is important for the Treasury, which, if article 6 is maintained, will undergo a loss on the products which the large distillers rectify directly.

But how can the situation which the small distillers have hitherto enjoyed be maintained? In other words, how can we take account in his favor of the loss which his impure low wines undergo in rectification?

One member of your special commission thought that the only means would be to add 5 per cent to the 15 per cent of the reduction granted by the 1st section of article 7 to agricultural distillers, making their total reduction 20 per cent.

He thinks that this reduction ought to be granted to agricultural distillers who rectify their products as well as to the agricultural distillers who produce only low wines. The reason is that the further rectification has nothing to do with the levying of a tax, the duty being assessed on the low wines the moment they issue from the still or the distilling column.

It is objected that among the rectifying agricultural distillers there are some who use well-appointed distilling columns, and thus are able to convey into the measuring vessels low wines rectified to a certain degree, and that, to this extent, if in their quality as agricultural distillers they obtain a reduction of 20 per cent, in virtue of article 7, they would have an advantage both over the industrial distillers and over the imperfectly equipped small agricultural distillers.

Answer has been made that the industrial distillers will for rectification use low wines produced by the small agricultural distillers, who would have obtained the reduction of 20 per cent proposed by the special commission. All that could be granted in this respect would be to fix at 20 per cent the reduction of article 7 for agricultural distillers who produce only low wines, and to maintain the reduction of 15 per cent for the agricultural distillers who rectify. Your special commission, it is true, proposed by three votes against two to fix the figures at 20 and 10 per cent, but this vote was taken when there was no question of suppressing article 6; and according to the statement of the member in question there remains no reason for refusing to the rectifying agricultural distiller the reduction of 15 per cent which was always granted to him, and which is justified by the special restrictions and obligations imposed on him by the law, limiting his work and obliging him to keep in his stables a certain number of stock, and to cultivate a certain number of hectares of arable land.

Your special commission, without reversing its first decision, thinks that the chamber will do well to examine closely in which direction the decision ought to be finally given.

In regard to article 7, the agricultural distillers demand that the surplus of residue may be sold, or at least utilized for the stock which they raise and fatten on their meadows and their pastures, or which are stabled outside of the inclosure of the distillery, What can the distiller do, they say, with his residue when, for example, his stock

is sick? Did they think of the fact that with a slight change in flour, due to the tax on the output, there will be a great surplus of residue; that is to say, much more than the number of stock required by the law would be able to consume. At the present price of lean stock the distiller will lose the advantage of the deduction of the tax if he is to raise a sufficient number of animals to consume all his residue.

The Government declares that it sees no objection to changing the bill in this respect, and it proposes to modify the bill according to the desire of the interested parties, and to word sec. 2 of article 7 as follows:

SEC. 2. By agricultural distillers are understood—

A. Those who utilize all or part of their residue from distillation to feed stock of their own kept by them within the inclosure of their distillery, and who furthermore satisfy the following conditions:

1. As in the bill, sec. 3.

In no case shall they be considered as agricultural distillers who use syrup, molasses, glucose, wine, or mash, who distill fruit imported from abroad, or who manufacture yeast not used in their factory.

Your special commission, too, finds that the complaints of the agricultural distillers are well founded, but it asks whether the text proposed by the Government does not go beyond its purpose; whether it is not so broad as to give rise to the danger of abuse.

This text, in fact, authorizes the agricultural distiller to use his residue to feed stock outside of the distillery, and even to sell it; it suffices that he assigns a part of it to feed stock raised or fattened under the terms of the law in the distillery; but what is that part? Of this the distiller is the sole judge.

Ought not the permission be limited to this, That the agricultural distiller may use the excess of his residue to feed stock belonging to him, and raised or fed outside of the distillery in separate stables, or on meadows or pastures?

Would not the sale of residues to neighbors give occasion to fraud which it would be difficult and sometimes impossible to discover and prove?

The majority of your commission express the opinion that it would not be prudent, at least for the present, to permit the sale of surplus, and that the original text ought to be maintained, adding, however, to article 7 a final section, thus worded:

The surplus of residue may be utilized by agricultural distillers to feed stock belonging to them, and fed by them outside of the distillery, in separate stables, on meadows or pastures.

Such are the resolutions passed, and the considerations advanced before your special commission, in regard to the answers and amendments transmitted to it by the minister of finance in his note of June 25, last.

For the rest, mutatis mutandis, it subscribes to the other observations and amendments presented by the minister of finance which do not relate to articles 6 and 7.

Besides the questions treated of in the present report, the minister of finance has raised some others, on which your special commissioner agrees with him.

The first regards the quota of manufacturers; the second justifies the desire expressed by some manufacturers who wish that while the present system is maintained greater facilities be nevertheless granted as regards the contents of vessels serving for the first manipulation of raw

material; that the work of seventy-two hours be authorized, as well as the manufacture of yeast by distillers working under the system now in force.

The third question raised relates to the proposition to create a new class of distillers, using exclusively domestic grain.

The minister of finance replies negatively to these questions, basing himself on the reasons set forth in the argument (pages 10 to 11, inclusive), to which we refer.

In the argument there is an omission which the special commission would like to see supplied in the discussion before the chamber.

Article 7, letter C, provides for the association of farmers under a cooperative form for running an agricultural distillery. The argument is silent as to the special conditions that are to be imposed on these associations. It would be well to give some explanations on this point, and not to let the Government confine itself to saying that the minister of finance will determine the conditions.

At the end of the argument the minister of finance enumerates the advantages of the bill in the following words:

Up to the end of 1897 the distiller will have the choice of continuing to work according to the present system, or adopting the system of tax on output.

This method will insure to the distillers—

a. A greater stability of the tax, which will no longer vary from year to year.

b. A greater liberty of work, as regards capacity of vessels, and duration of fermentation.

c. The possibility of using less condensed raw material taken from our own soil and to work with small charges.

d. Permission to make yeast and leaven.

e. Considerable diminution in general cost.

f. Improvement in the quality of products.

g. Equality in regard to tax by the suppression of excess of output.

h. The means to compete under more favorable conditions on the foreign market.

i. Exemption from duty for alcohol intended to be used in the arts.

j. The bill does not subject the distillers to more annoying formalities than those now in use.

k. Agriculture will profit—

1. By the use of grain in the manufacture of yeast and leaven.

2. By the use of beets, artichokes, and potatoes, which it will be profitable to use for distilling

3. By the favor granted to the distillation of fruit and to agricultural distilleries.

l. Exporters on their part will find their situation improved.

We really believe that if all these improvements are realized the Government will have rendered substantial service to the country. In the hope that this expectation may not be miscarried, your special commission voted unanimously for the whole bill, under reserve as to the amendments presented or passed on.

The following amendments were passed by the special commission (see pp. 5 and 13 of this report):

Replace the provision, article 7, section 1, by the following:

ART. 7. SEC. 1. To agricultural distillers is granted a reduction of 15 per cent of the duty.

This reduction is reduced to 10 per cent for agricultural distillers who rectify.

Add to article 7 a section thus worded:

The excess of residue may be used by agricultural distillers to feed stock belonging to them and fed by them outside of the distillery in several stables, on meadows, or pastures.

The following amendments were presented by the minister of finance (see note No. 1 inserted in the present report, p. 19):

Amendments to articles 6 and 97, pages 20 and 23; article 7, page 23; article 26, section 2, page 25; article 56, page 35; article 25, page 41; article 78, page 43; article 55, page 45; article 8, page 45; article 57, page 45; article 69, page 47; article 117, page 47; article 29, page 49.

For the text of these amendments we refer to note No. 1 above cited.

P. TACK.

APPENDIX.

Every distillery of alcohol is agricultural, whether it draws the alcohol from the indirect product of the soil, such as molasses, or from the direct products of the soil, such as grain, fruit, potatoes, artichokes, etc. Only the distillery of wood alcohol, which is free from duty, is not agricultural.

Distillery agricultural, because it uses as raw material the product of the land, and because the residue goes, directly or indirectly, back to the land.

Most of the distilleries are situated in the country, even the large ones. If there are two large distilleries at Antwerp, on the other hand, small distilleries are found at St. Nicholas, Lokeren, Bruges, Hasselt, etc. The location of a distillery matters little; for the farmers, market gardeners, and dairymen of the vicinity supply themselves in a great measure from the city distilleries.

Thus, the distinction of distilleries into industrial and agricultural has no base in fact. There are large and small distilleries, as there are large and small sugar manufactories, breweries, etc. All the distilleries render service to agriculture; and contrary to what some try to make one believe, the large distilleries render more service to agriculture than the small ones. In fact a small distillery (erroneously called agricultural) uses only the products of its owner, and furnishes its residue exclusively to him.

A large distillery uses the products of a great number of small farmers, and furnishes to them (who are without the necessary resources to become distillers) the residue which enables them to feed their stock, make manure and fertilize their land. There are large distilleries which furnish residue to several hundred farmers; and since large distilleries have begun to dry the residue, and reduce their weight by nine-tenths, this residue is kept indefinitely, and may be shipped afar; thus they are at the disposal of any one that needs them.

It can not be questioned that from an agricultural point of view large distilleries render more service than small ones. The large distillery is agricultural and democratic. The question may therefore well be asked why a reduction of 15 per cent is granted to small distilleries on pretext that it is agricultural.

The reason for this is found on the one hand in the method of levying duties in use in Belgium since 1833, namely, the tax on the raw material vat, and, on the other hand, in the allowances which this mode of taxing necessarily caused to be granted. The assessor said to himself, the small distiller less well equipped obtains a smaller output; the large distiller working with larger quantities obtains a larger total of surpluses, and on that account can compete ruinously with the small distiller in the sale of the products of distillation. Although this reasoning was applicable to all industries subject to excise duty, the reduction of the tax was applied only to distilleries, and this since 1837.

We admit that the reasoning contains a foundation of truth. But we must point out that the 15 per cent reduction granted to the small distillers since 1841, at that time when the duty on the hectoliter of space in the vat was only 0.60 francs, represented 9 centimes, and that this figure gradually rose to 2.43 francs after 1893, when the duty per hectoliter of space in the vat was fixed at 16.20 francs. Thus the privilege has constantly grown in importance. It is now, after fifty years, almost 300 times as great as it was in the beginning.

Be this as it may, the present bill suppresses entirely the causes of inferiority

between small and large distilleries, so far as they result from legislation. As to the natural causes over which the legislature has no power, such as the intelligence and ability of the distiller, his larger or smaller capital, the more or less favorable location of his distillery, the law can not take them into account, and it does not take them into account in any industry.

Hereafter the distiller, large or small, will pay the duty on the alcohol produced, and on all the alcohol produced. How, then, can the maintenance of this privilege of a 15 per cent reduction, for the benefit of one class of manufacturers, a unique privilege in our laws, hereafter be justified? If the principle is just it ought to be applied to all industries, sugar manufactories, breweries, vinegar works, etc. But far from recognizing its justice, the Government recognizes its injustice, for it did not subscribe to the principle of the quota demanded almost unanimously by the distillers. The quota method offered a means of limiting the extension of the wholesale industry. The Government held that this would be contrary to the spirit of our Constitution and to the freedom of our industries.

Thus, in principle, the maintenance of the 15 per cent reduction of the duty is not justified in the new law.

The following considerations complete the demonstration of this:

During the decade from 1881 to 1890 there were on an average 232 active distilleries enjoying the reduction of the duty; several of them belonged to the same distiller. All these distilleries consumed together annually 423,978 hectoliters of material dutiable at the rate of 11.80 francs. This makes a total amount of duty of 5,002,940 francs, of which the Government returned 15 per cent, or 750,441 francs. This sum was distributed among 232 persons. What advantage does this afford to agriculture in general?

There are in Belgium 910,396 farmers. (This number corresponds to the number of farms of all sizes in 1880, according to the Annuaire-statistique.)

The purpose of the reduction is to increase the number of small distilleries. Suppose it is successful, and the number is quadrupled. There will then be 928 farmers profiting by it, out of the 910,396.

But the loss of the treasury, which now is 750,441 francs, will rise to 3,001,764 francs. Has the Government considered this result? In thus pursuing the artificial development of small distilleries it progressively reduces the yield of the tax.

This development of small distilleries must necessarily involve the proportional reduction of large distilleries. In fact exportation has dwindled to nothing since the legal output has come nearer and nearer to the actual output.

With the tax on the output, whatever the argument may say, exportation will remain insignificant. The large distilleries in 1892 produced 2,498,709 hectoliters of dutiable material.

If the production of the small distilleries is quadrupled that of the large distilleries will be reduced to 1,802,797 hectoliters. The result will be that a great number of small farmers will no longer be able to get residue in their vicinity.

From the agricultural point of view, there will be a displacement, and not an increase of benefit, and this will cost the treasury 3,000,000 a year.

Where is the interest of agriculture in this?

If the treasury keeps these 3,000,000, it can use them for the benefit of all the farmers, instead of favoring 928 out of 910,396.

With the tax on the output, domestic grain can be distilled under conditions as favorable as those of foreign grain, which are richer in alcohol, and therefore dearer. Under the present system, recourse has to be had to rich material, because they give a surplus over duty; and the greater the duty the greater the profit. When this profit disappears, the inducement to use the rich foreign grain also disappears. Thus in this respect complete equality is established between small and large distilleries.

In a small, green pamphlet: "A question addressed to the Government in regard to agricultural distilleries," the anonymous author, who can be no other than an agricultural distiller, tries to prove, on page 5, that the competition of agricultural distilleries with large distilleries will become impossible, and that the former must therefore necessarily succumb.

If the author is a specialist he leads his readers into error knowingly.

First of all, he carefully avoids making any comparison between small agricultural grain distilleries and large grain distilleries.

He selects for comparison molasses distilleries. Taking for his base the exceptionally low price of 7 francs for molasses (last year it was 10 francs), he gets a cost of production of 73.55 francs for 100 liters of alcohol. But he forgets to add to this price the cost of the yeast, 5 francs, which will bring the cost of production up to 78.55 francs.

On the other hand, he calculates the cost of production of 100 liters of alcohol in an agricultural distillery under the present system, whereas with a tax on the output the cost of production will be completely changed.

Under the new system the cost of production will be as follows:

	Francs.
112 kilograms of rye, at 13 francs	14.56
38 kilograms malted barley, at 21 francs	7.98
3 kilograms yeast, at 20 centimes	.40
Total	22.84
Duty (with reduction of 15 per cent)	54.40
Total	77.24
Deduct 15 hectoliters of residue at 75 centimes	12.24
Balance	65.00
As compared to 100 alcohol from molasses	78.55
Difference in favor of the agricultural distiller	13.55
Hence, deducting 15 per cent, or	9.60
There remains	3.90

Which is the difference in favor of the agricultural distiller over the distiller of molasses, even when no reduction is allowed. Hence there is no reason for granting the privilege of a 15 per cent reduction.

In favoring the small distiller, ill-rectified alcohol, essentially hurtful to health, will inevitably be thrown on the market.

There are few agricultural distillers who produce irreproachable alcohol. These sell their gin at high prices and have no need of protection.

The others generally retail their detestable product in their vicinity very cheap; they are harmful to health.

At least the law ought to oblige those who wish to profit by the reduction of 15 per cent to sell their low wines to industrial distillers, or rectifiers, able to purify these products properly, so as not to present any danger for the consumers. This is done in Holland; the small distillers sell their low wine (moutwijn) to the large distillers or rectifiers, who turn them into irreproachable articles.

In the rectifying establishments the Government could exercise an efficient supervision in the interest of public health, a supervision demanded by public opinion.

O